WTC
DRAWING BOOK 6
AB 1–120 — AB 1–315

Cover Stock
8½ x 11

SKILLING - HELLE - CHRISTIANSEN - ROBERTSON Structural & Civil Engineers

PROJECT THE WORLD TRADE CENTER | TITLE CONNECTION DETAIL 313 A,B,C,D,(E,F) | DATE 6-5-67

REVISIONS
9-15-67
10-2-67
10-5-67

WTCI-21-LERA

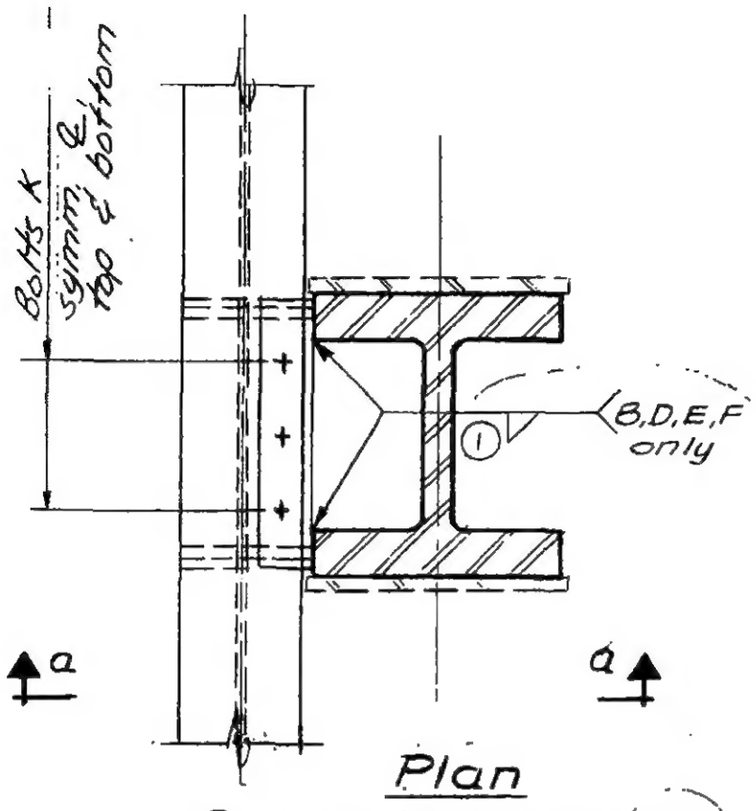

Plan
Details 313 A,B,D,(E,F)

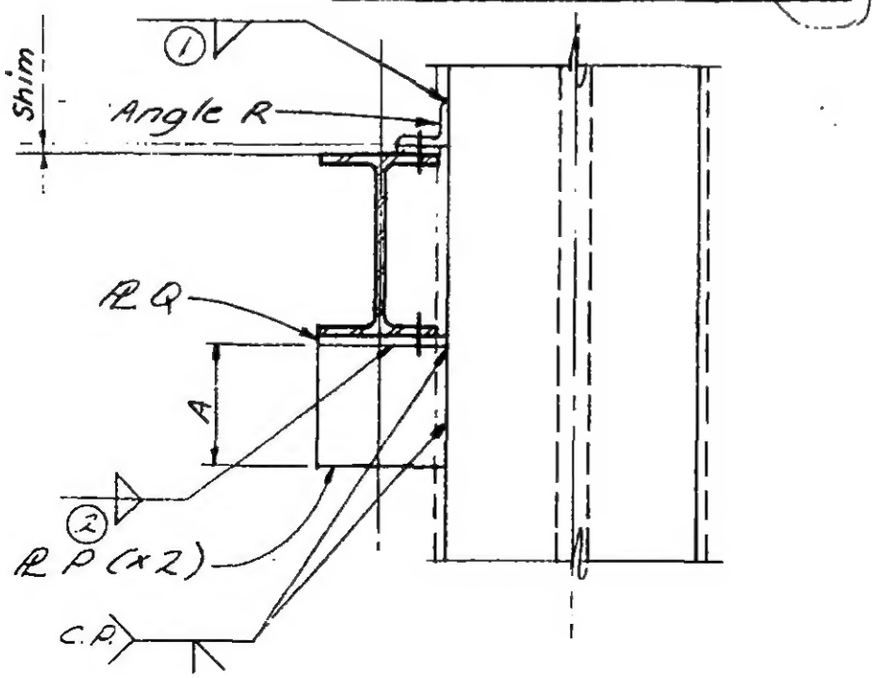

Section a-a

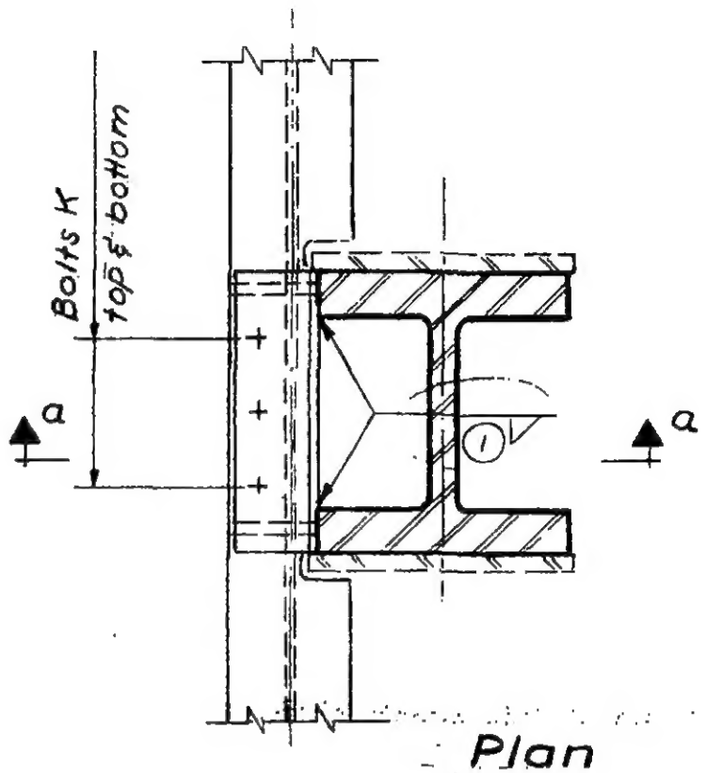

Plan
Detail 313 C

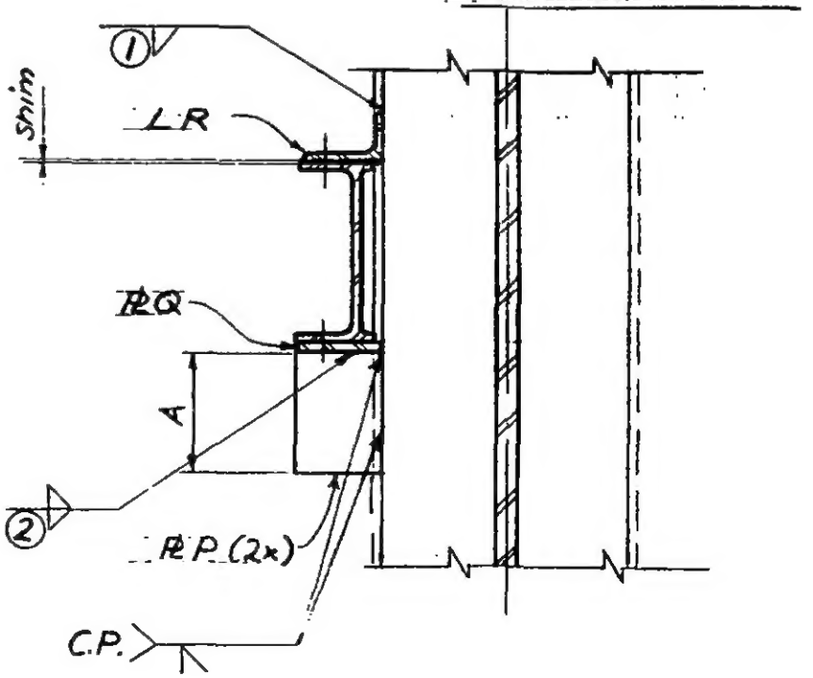

Section a-a

6-AB1-120

SKILLING - HELLE - CHRISTIANSEN - ROBERTSON Structural & Civil Engineers

PROJECT THE WORLD TRADE CENTER | TITLE SCHEDULE FOR DETAIL 313A, B, C, D, E, F | DATE 9-15-67

REVISIONS
10-2-67
10-5-67

	313A	313B	313C	313D	313E	313F
PLATE						
P	5/8"	3/4"	3/4"	3/4"	5/8"	5/8"
Q	5/8"	3/4"	3/4"	3/4"	5/8"	5/8"
ANGLE						
R	3 1/2 x 3 x 5/16	5 x 3 1/2 x 5/16	6 x 3 1/2 x 5/16	6 x 3 1/2 x 5/16	6 x 3 1/2 x 5/16	6 x 3 1/2 x 5/16
DIMENSION						
A	1'-0"	1'-1"	1'-0"	1'-2"	1'-2"	1'-2"
BOLTS						
K	3-3/4" ϕ	3-3/4" ϕ	3-3/4" ϕ	3-3/4" ϕ	3-3/4" ϕ	3-3/4" ϕ
WELD						
①	1/4	1/4	1/4	1/4	1/4"	1/4"
②	5/16	5/16	5/16	5/16	5/16"	5/16"

G-ABI-1C.1

SKILLING - HELLE - CHRISTIANSEN - ROBERTSON — Structural & Civil Engineers

PROJECT THE WORLD TRADE CENTER | TITLE CONNECTION DETAIL 313 G, H | DATE 10-5-67

REVISIONS

11-23-67

313 G

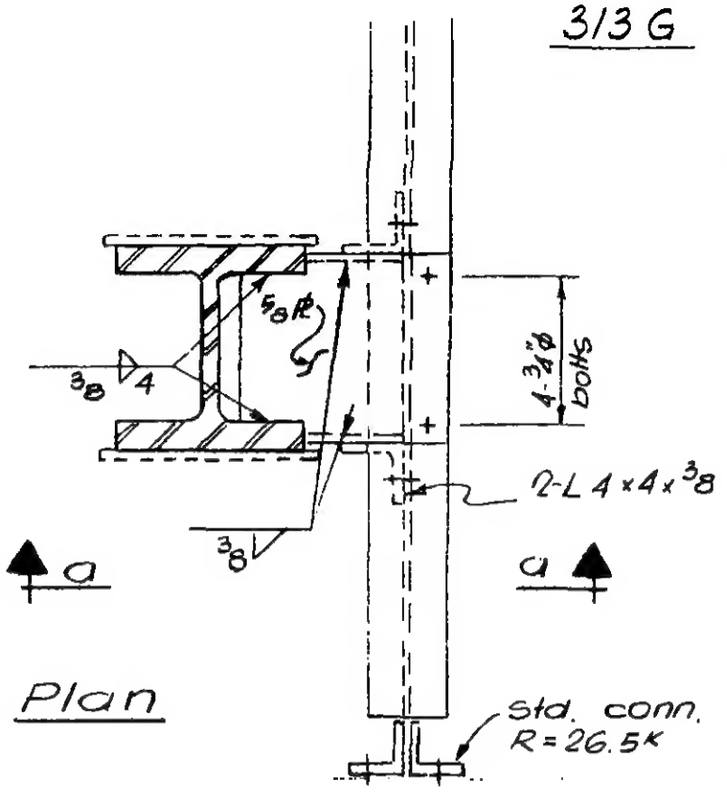

Plan

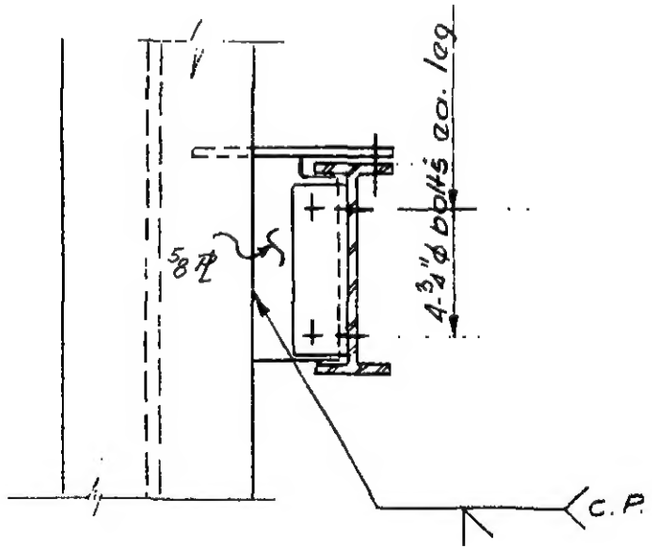

Section a-a

313 H

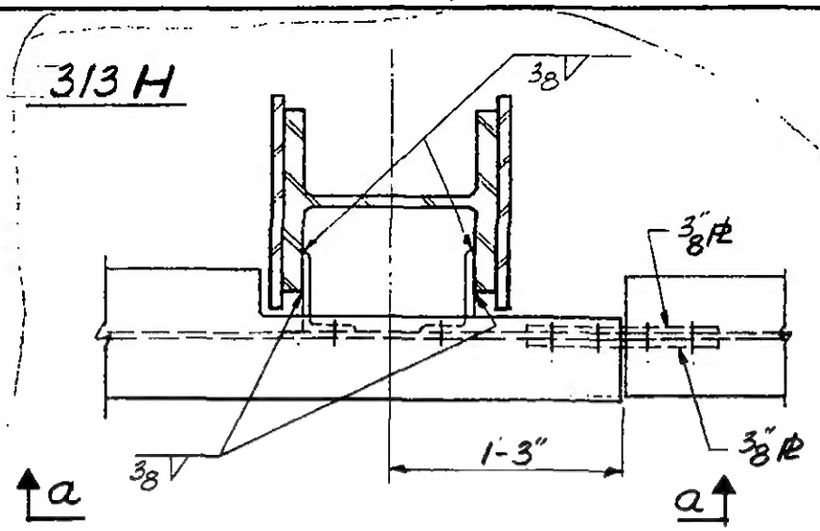

Plan

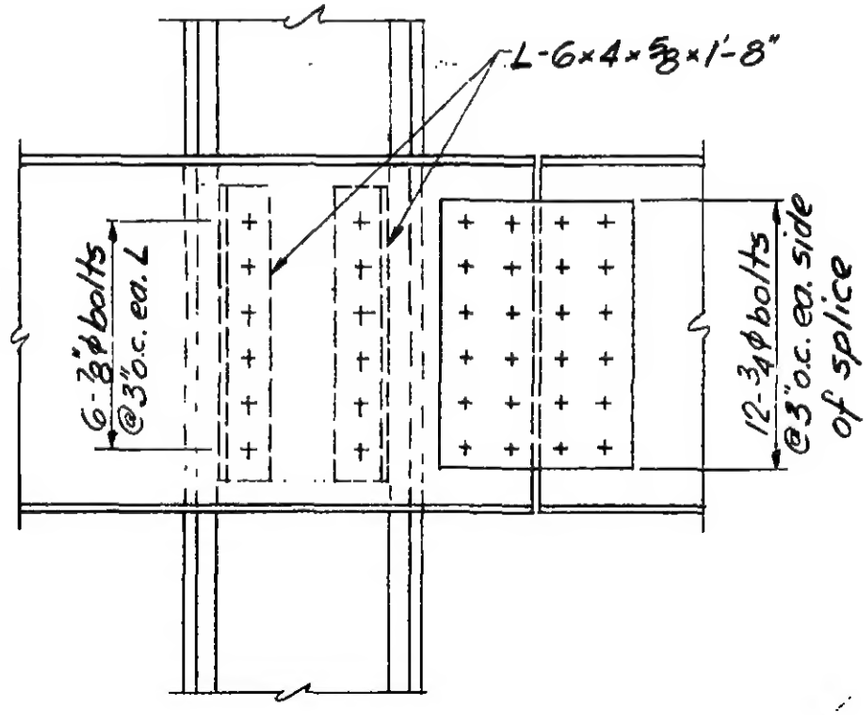

Section a-a

LICENSED PROFESSIONAL ENGINEER
LESLIE E. ROBERTSON
No. 34360
UNIVERSITY OF THE STATE OF NEW YORK

6-ABI-120.7

SKILLING - HELLE - CHRISTIANSEN - ROBERTSON Structural & Civil Engineers

PROJECT THE WORLD TRADE CENTER | TITLE CONNECTION DETAIL 313 I, J | DATE 12-21-67

REVISIONS

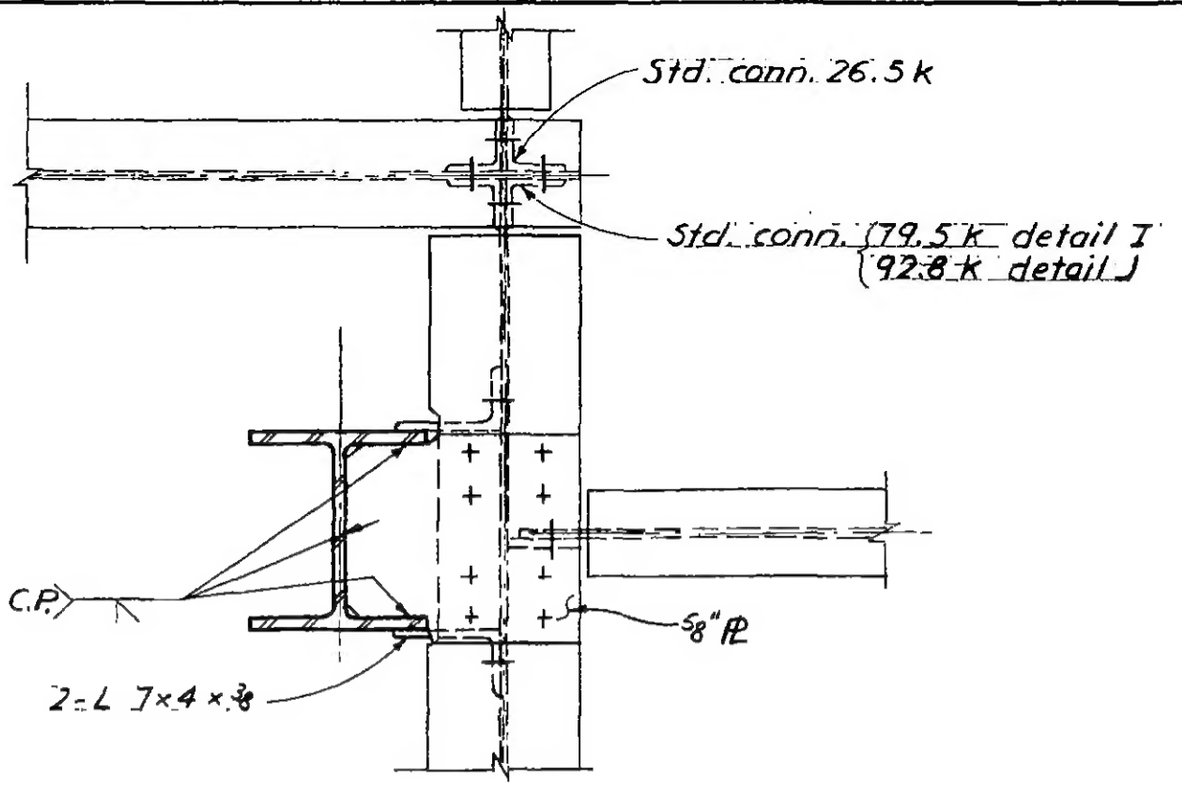

Plan

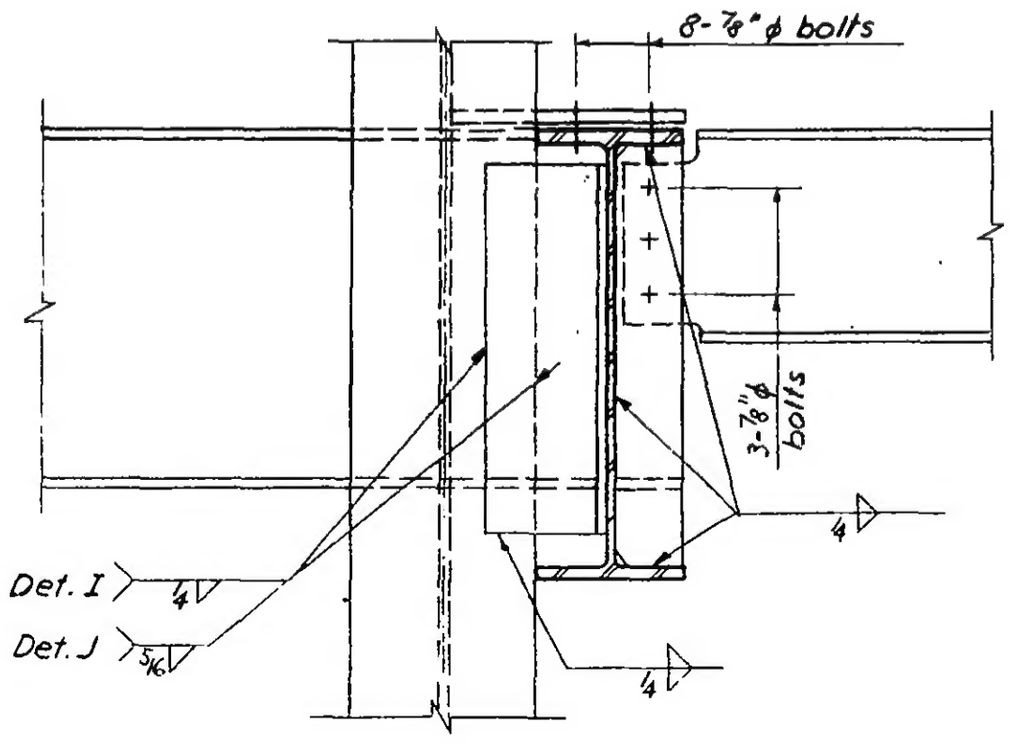

Section a-a

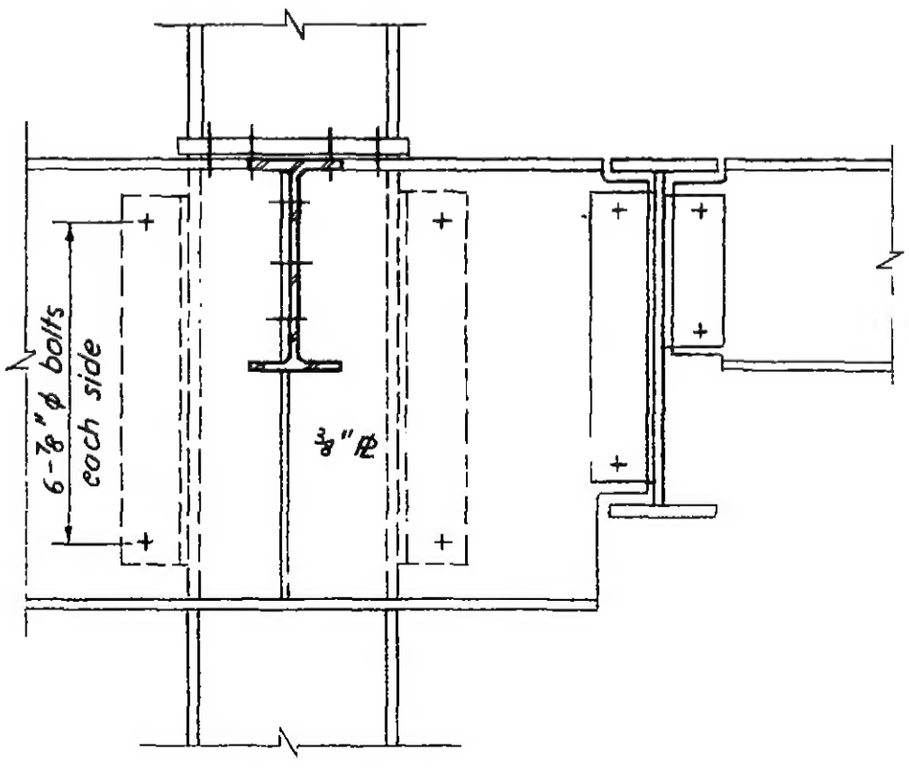

Section b-b

LICENSED PROFESSIONAL ENGINEER
LESLIE E. ROBERTSON
No. 34360
UNIVERSITY OF THE STATE OF NEW YORK

6-ABI-120.3

WORTHINGTON, SKILLING, HELLE & JACKSON — Civil & Structural Engineers

PROJECT	TITLE	DATE
THE WORLD TRADE CENTER	CONNECTION DETAIL 314 A, B, C	6-5-67

REVISIONS

10-2-67
10-5-67

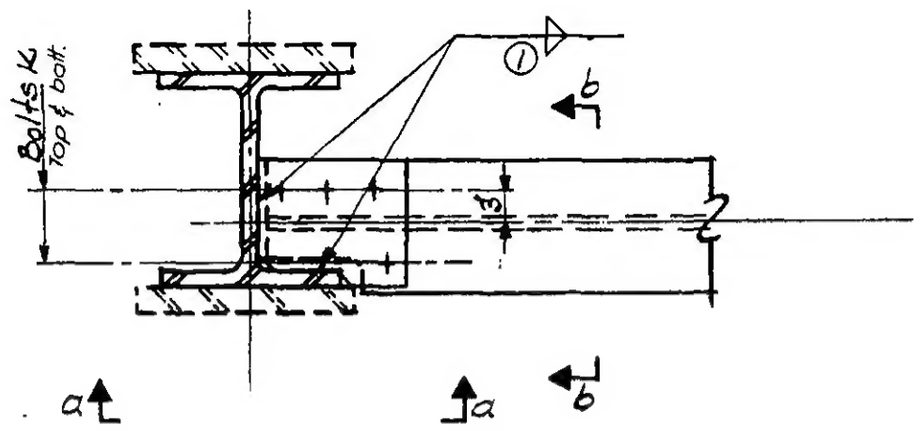

PLAN

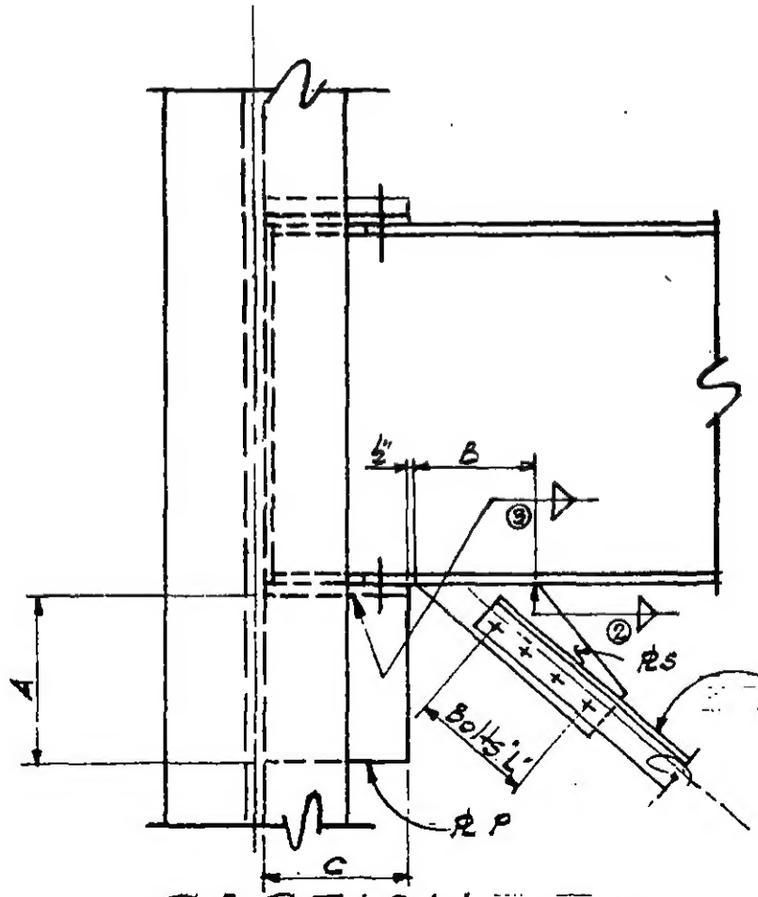

SECTION a-a

Diagonal bracing Detail 314B Only

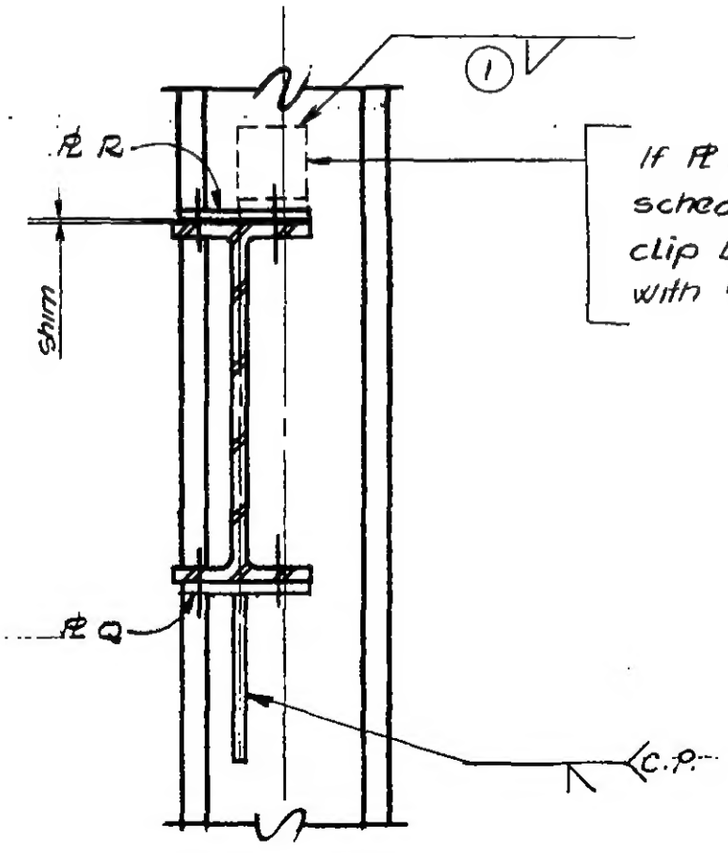

SECTION b-b

LICENSED PROFESSIONAL ENGINEER
LESLIE E. ROBERTSON
No. 34360
STATE OF NEW YORK

6-AB1-121

SKILLING - HELLE - CHRISTIANSEN - ROBERTSON Structural & Civil Engineers

PROJECT THE WORLD TRADE CENTER | TITLE SCHEDULE FOR DETAIL 314 A, B, C | DATE 10-2-67

REVISIONS

-5-67

	314 A	314 B	314 C			
PLATES						
P	3/4"	1"	5/8"			
Q	3/4"	1"	5/8"			
R	3/8"	3/8"	—			
S	—	5/8"	—			
BOLTS						
K	4-3/4" ϕ	4-3/4" ϕ	4-3/4" ϕ			
L	—	4-7/8" ϕ	—			
DIMENSIONS						
A	1'-3"	1'-6"	0'-9"			
B	—	0'-9"	—			
C	0'-8"	0'-10"	0'-6"			
WELDS						
①	5/16	5/16	5/16			
②	—	5/16	—			
③	5/16	5/16	5/16			

LICENSED PROFESSIONAL ENGINEER
LESLIE E. ROBERTSON
No. 34360
UNIVERSITY OF THE STATE OF NEW YORK

S-AB1-121.1

WORTHINGTON, SKILLING, HELLE & JACKSON — Civil & Structural Engineers

PROJECT: THE WORLD TRADE CENTER | TITLE: CONNECTION DETAIL 315 A-E | DATE: 5-9-67

REVISIONS

7-28-67

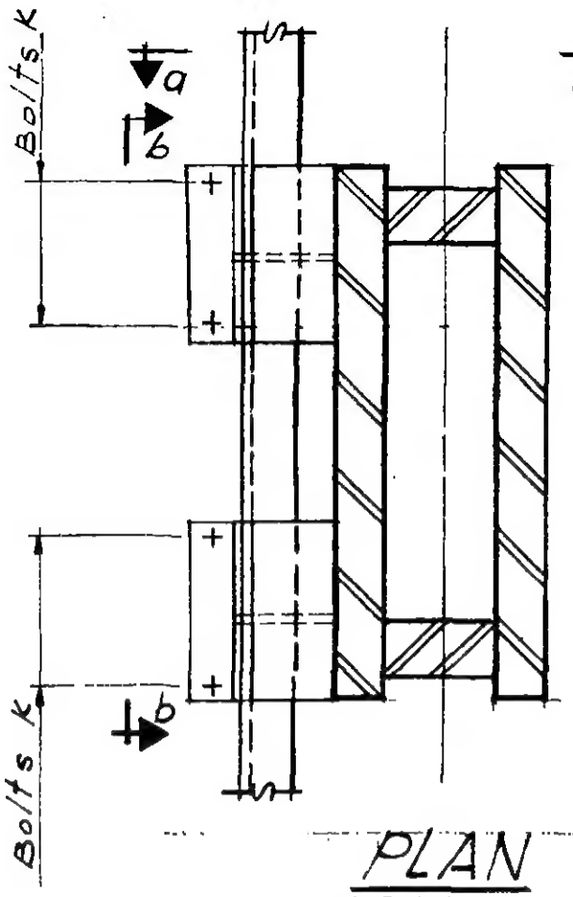

PLAN
315 A, B & C

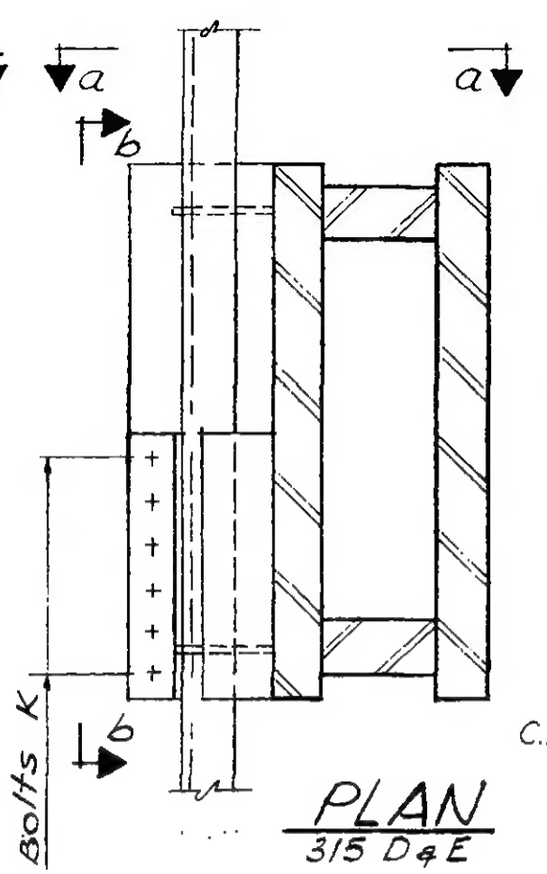

PLAN
315 D & E

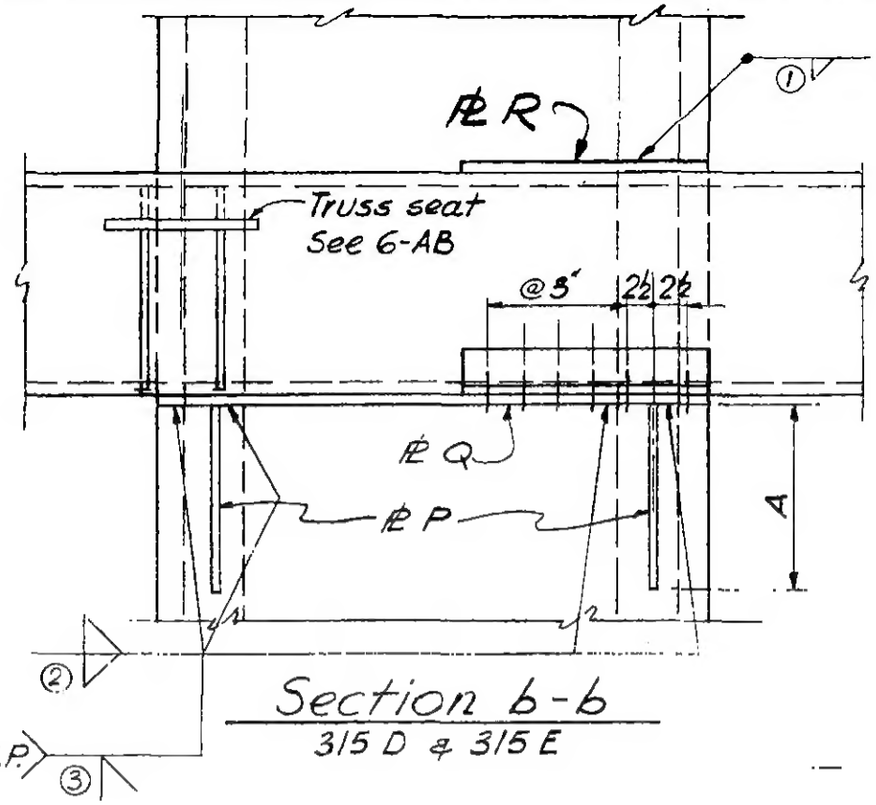

Section b-b
315 D & 315 E

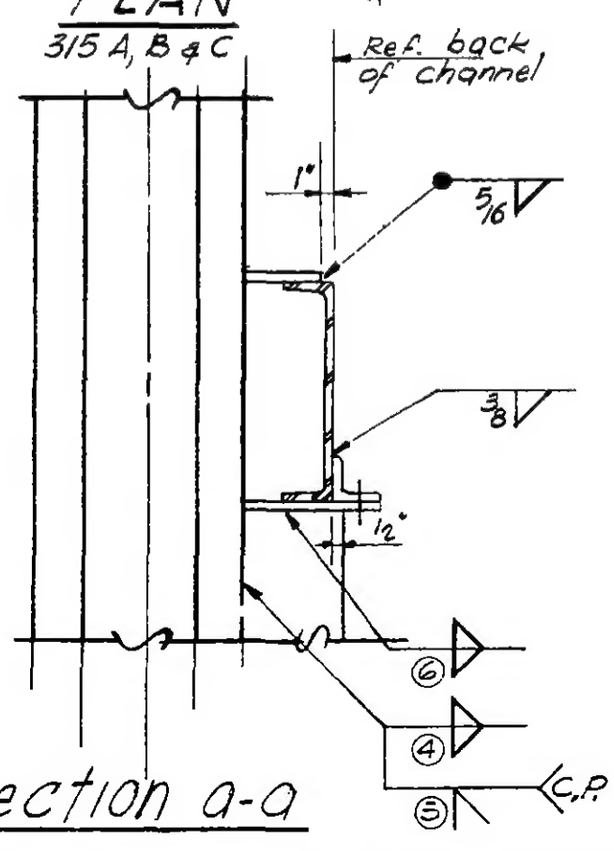

Section a-a

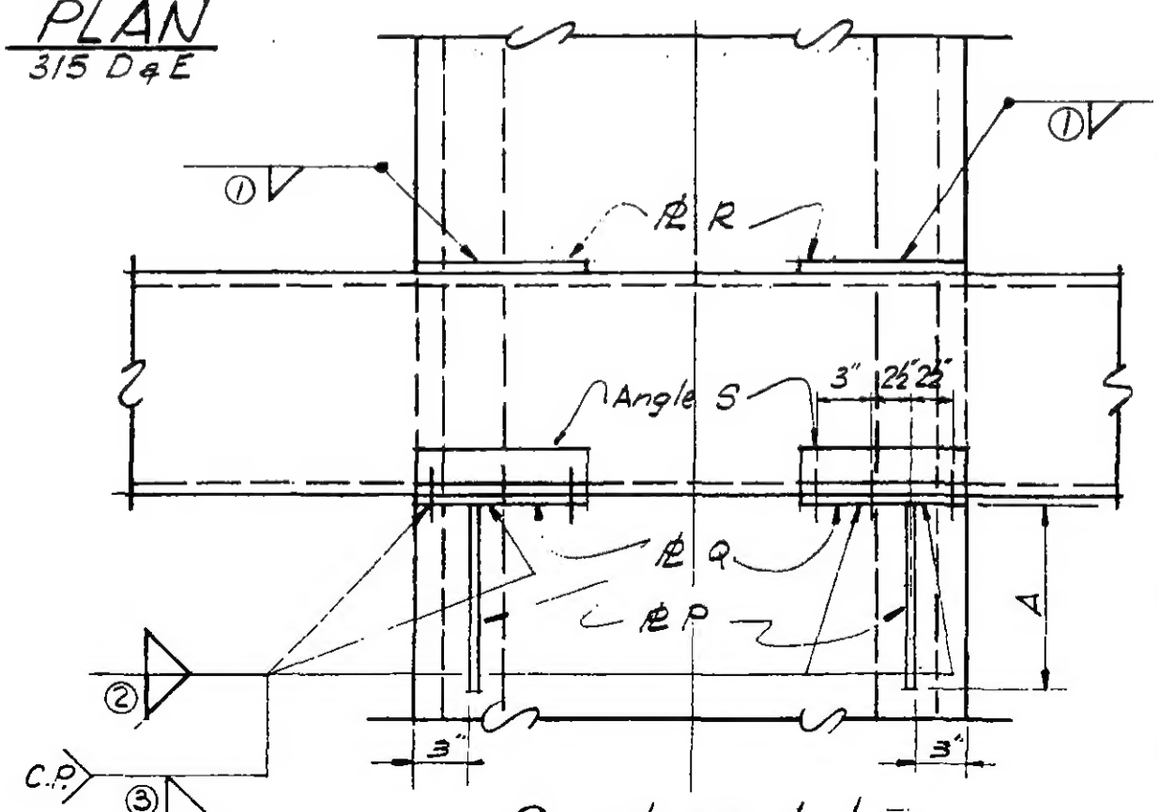

Section b-b
315 A, B & C

6-AB1-122

LICENSED PROFESSIONAL ENGINEER
LESLIE E. ROBERTSON
No. 34360
UNIVERSITY OF THE STATE OF NEW YORK

WORTHINGTON, SKILLING, HELLE & JACKSON — Civil & Structural Engineers

PROJECT: THE WORLD TRADE CENTER | TITLE: SCHEDULE FOR DETAIL 315 A - E | DATE: 7-28-67

REVISIONS

	315 A	315 B	315 C	315 D	315 E
PLATE					
P	½"	¾"	1/2"	½"	¾"
Q	5/8"	¾"	5/8"	5/8"	¾"
R	3/8" x 1'-0"	3/8" x 1'-0"	3/8" x 0'-6"	3/8" x 2'-0"	3/8" x 2'-0"
ANGLE					
S	3 x 3 x 7/16 x 1'-0"	3 x 3 x 7/16 x 1'-0"	3 x 3 x 7/16 x 0'-6"	3 x 3 x 7/16 x 1'-9"	3 x 3 x 7/16 x 1'-9"
DIMENSION					
A	1'-0"	1'-0"	1'-0"	1'-0"	1'-0"
BOLTS					
K	3-¾" ϕ	3-¾" ϕ	2-¾" ϕ	6-¾" ϕ	6-¾" ϕ
WELDS					
①	3/8	3/8	3/8	3/8	3/8
②	—	—	—	—	—
③	C.P.	C.P.	C.P.	C.P.	C.P.
④	—	—	—	—	—
⑤	C.P.	C.P.	C.P.	C.P.	C.P.
⑥	5/16	5/16	5/16	5/16	5/16

LICENSED PROFESSIONAL ENGINEER — LESLIE E. ROBERTSON — No. 34360 — UNIVERSITY OF THE STATE OF NEW YORK

6-AB1-122.1

WORTHINGTON, SKILLING, HELLE & JACKSON — Civil & Structural Engineers

PROJECT THE WORLD TRADE CENTER | TITLE CONNECTION DETAIL 316 A & B | DATE 6-5-67

REVISIONS
9-15-67
11-10-67

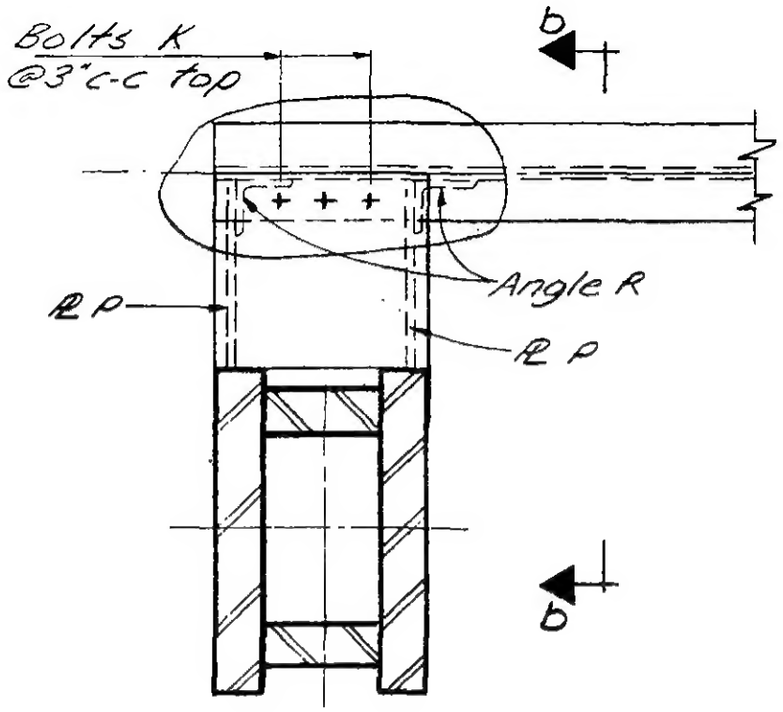

Plan

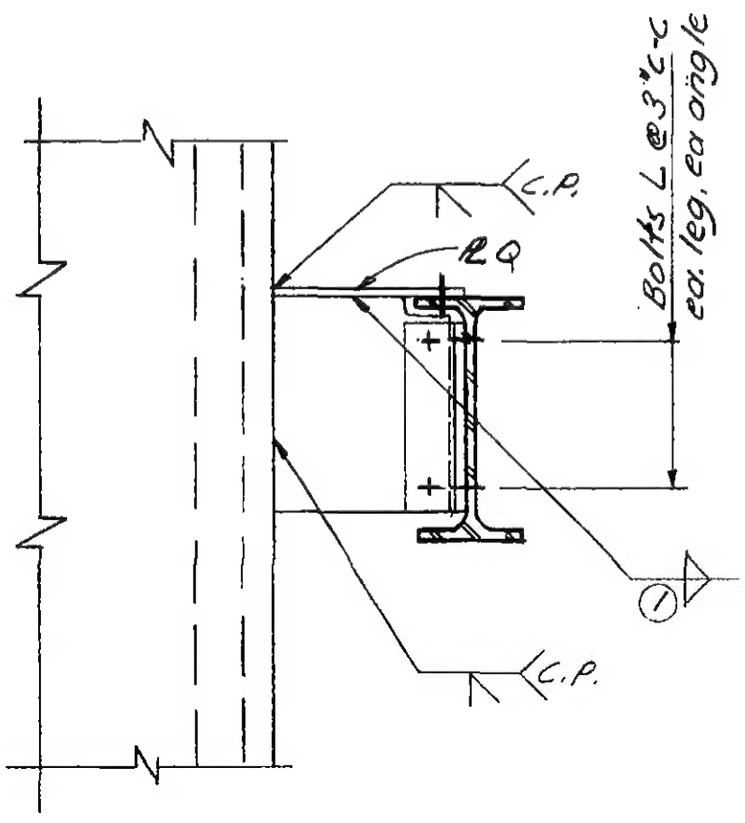

Section b-b

LICENSED PROFESSIONAL ENGINEER
LESLIE E. ROBERTSON
No. 34360
UNIVERSITY OF THE STATE OF NEW YORK

6-AB1-123

SKILLING - HELLE - CHRISTIANSEN - ROBERTSON Structural & Civil Engineers

PROJECT THE WORLD TRADE CENTER | TITLE SCHEDULE FOR DETAIL 316A,B | DATE 9-15-67

REVISIONS

	316A	316B				
PLATES						
P	3/4"	3/4"				
Q	3/4"	3/4"				
ANGLES						
R	4 x 3 1/2 x 5/16	4 x 3 1/2 x 5/16				
BOLTS						
K	3-3/4" ϕ	3-3/4" ϕ				
L	4-3/4" ϕ	6-3/4" ϕ				
WELDS						
①	5/16	5/16				

6-AB1-123.1

WORTHINGTON, SKILLING, HELLE & JACKSON — Civil & Structural Engineers

PROJECT: THE WORLD TRADE CENTER | TITLE: CONNECTION DETAIL 317 A, B, C, D, E, F | DATE: 5-22-67

REVISIONS
7-28-67
8-14-67
9-15-67
10-2-67

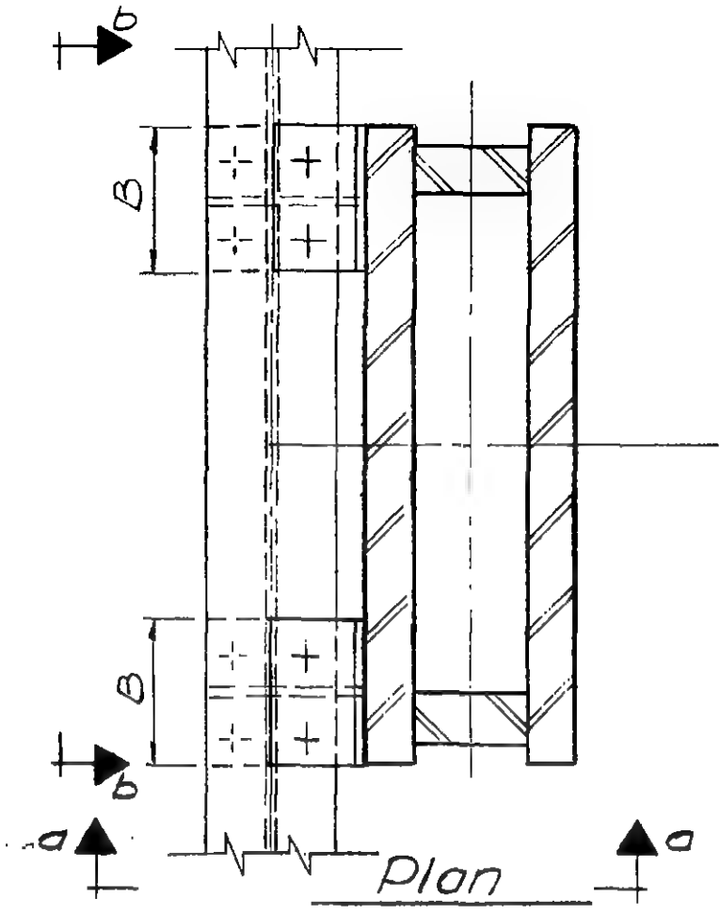

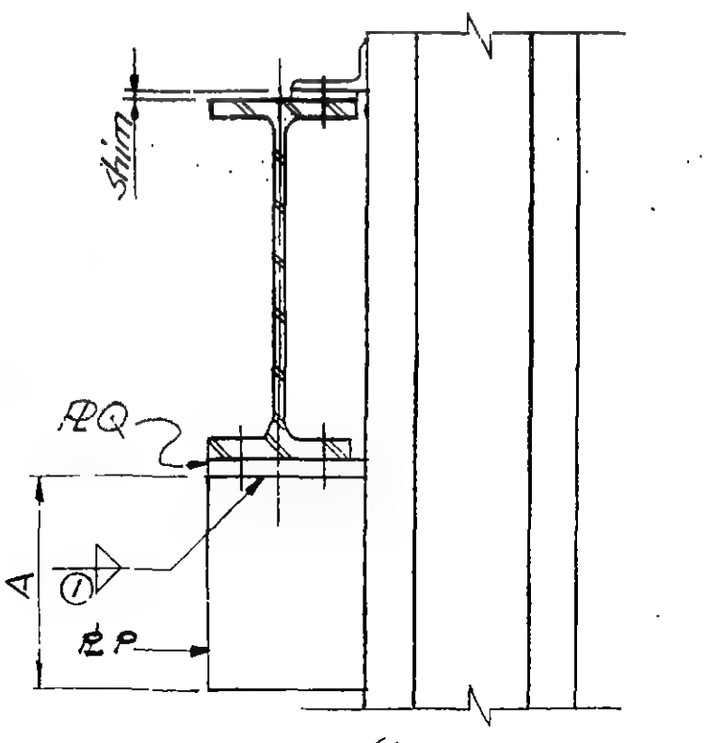

Section a-a
Section a'-a' similar

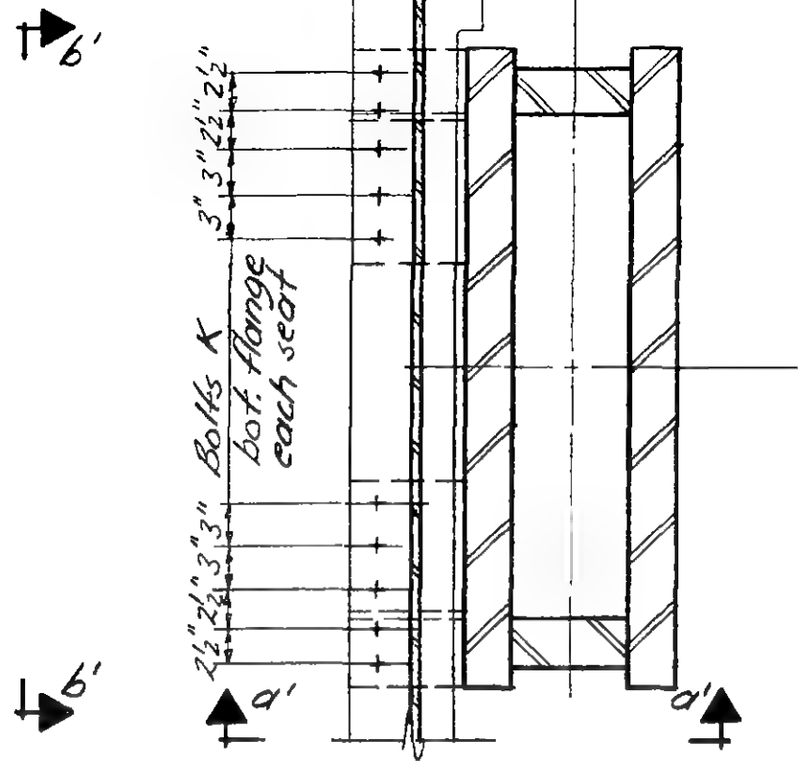

Plan 317C

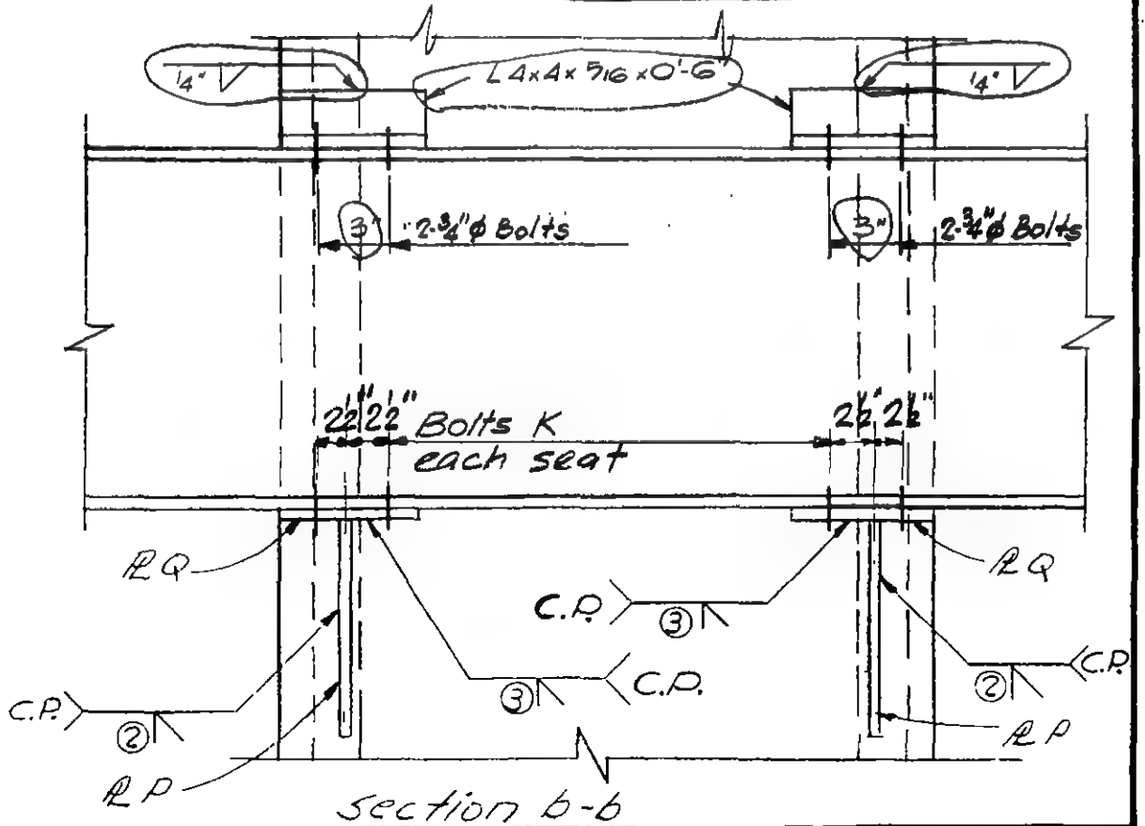

Section b-b
Section b'-b' similar

LICENSED PROFESSIONAL ENGINEER
LESLIE E. ROBERTSON
No. 34360
UNIVERSITY OF THE STATE OF NEW YORK

6-AB1-124

SKILLING - HELLE - CHRISTIANSEN - ROBERTSON Structural & Civil Engineers

PROJECT THE WORLD TRADE CENTER | TITLE SCHEDULE FOR DETAIL 317 A-F | DATE 7-28-67

REVISIONS

3-14-67
9-15-67
10-2-67
11-10-67

	317A	317B	317C	317D	317E	317F
PLATES						
P	1"	1"	1/2"	3/4"	1"	1/2"
Q	1 1/4"	1"	1/2"	3/4"	1"	1/2"
DIMENSIONS						
A	1'-0"	1'-2"	1'-0"	1'-2"	1'-2"	1'-0"
B	0'-9"	0'-9"	1'-5"	0'-7 1/2	1'-0"	0'-9"
BOLTS						
K	4-7/8"Φ	4-7/8"Φ	5'-3/4"Φ	4-3/4"Φ	4-1"Φ	4-3/4"Φ
WELDS						
①	1/2	1/2	5/16	5/16	1/2"	5/16"
②	C.P.	C.P.	C.P.	C.P.	C.P.	C.P.
③	C.P.	C.P.	C.P.	C.P.	C.P.	C.P.

LICENSED PROFESSIONAL ENGINEER
LESLIE E. ROBERTSON
No. 34360
UNIVERSITY OF THE STATE OF NEW YORK

6-ABI-124.1

SKILLING - HELLE - CHRISTIANSEN - ROBERTSON Structural & Civil Engineers

PROJECT THE WORLD TRADE CENTER | TITLE CONNECTION DETAIL 318A | DATE 6-5-67

REVISIONS

) - 2 - 67

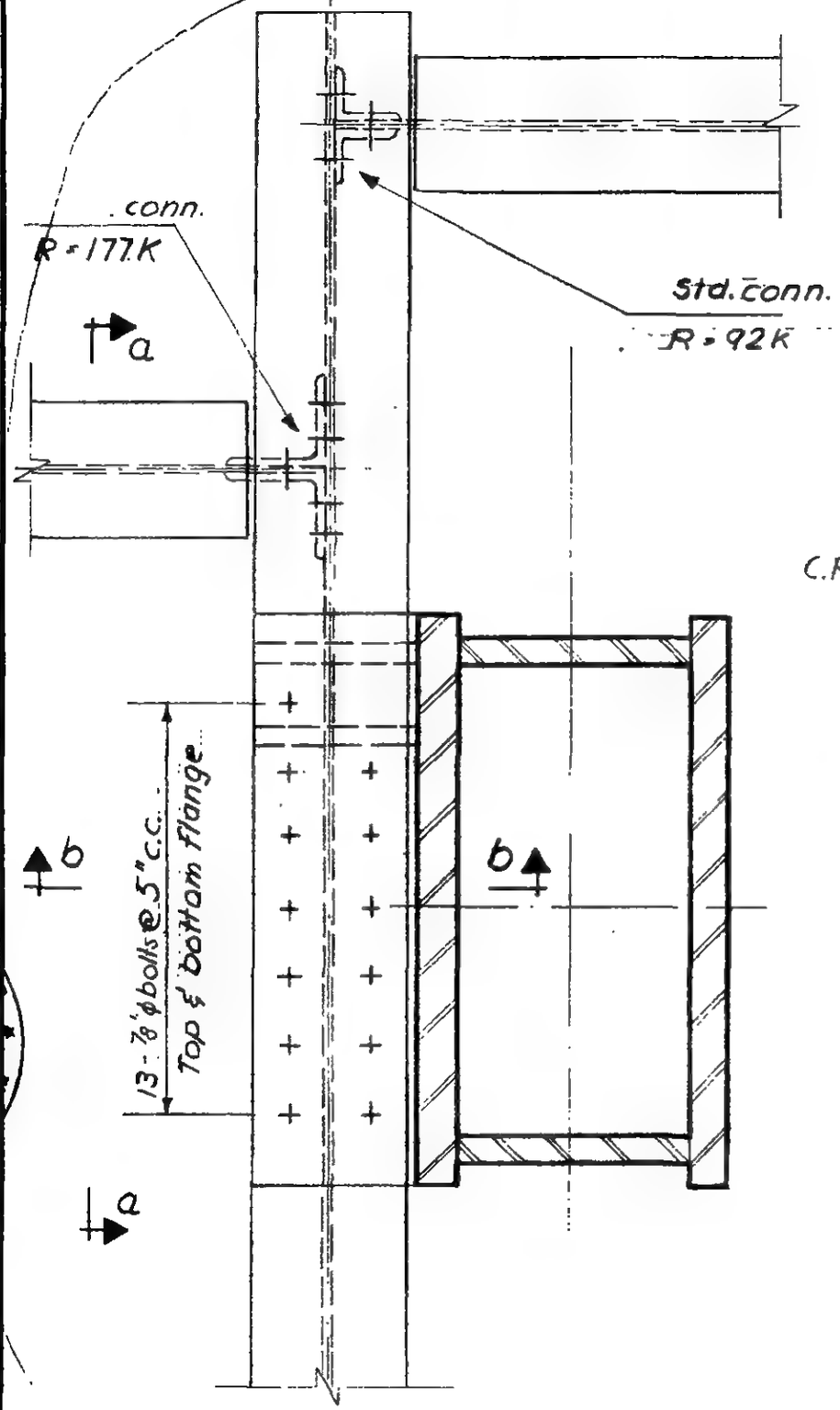

Plan

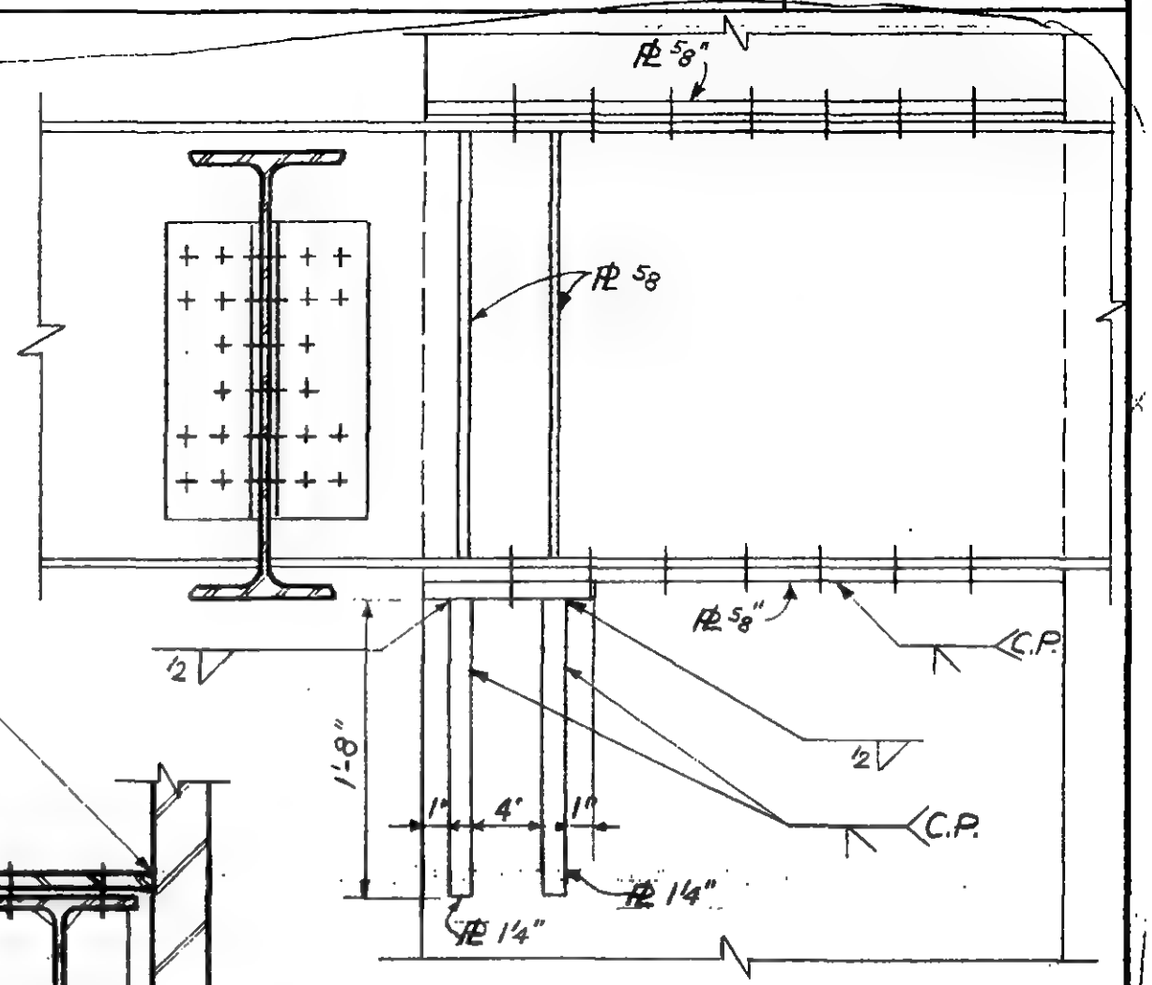

Section a-a

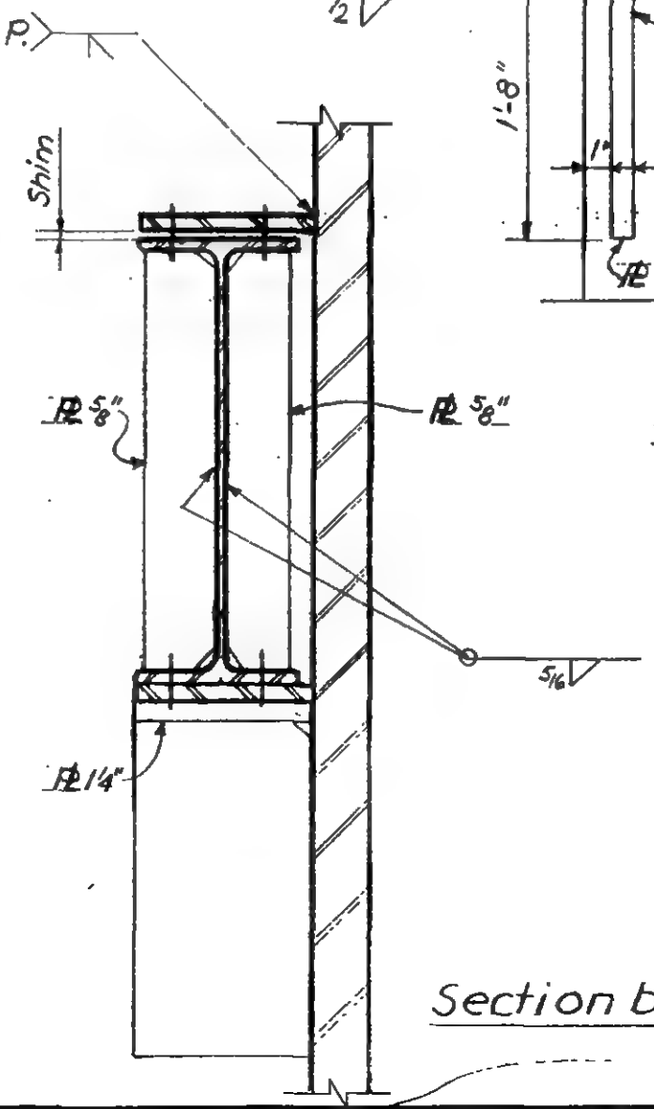

Section b-b

LICENSED PROFESSIONAL ENGINEER
LESLIE E. ROBERTSON
No. 34360
UNIVERSITY OF THE STATE OF NEW YORK

6 - ABI - 125

SKILLING - HELLE - CHRISTIANSEN - ROBERTSON Structural & Civil Engineers

PROJECT THE WORLD TRADE CENTER | TITLE CONNECTION DETAIL 320A | DATE 6-5-67

REVISIONS

10-2-67

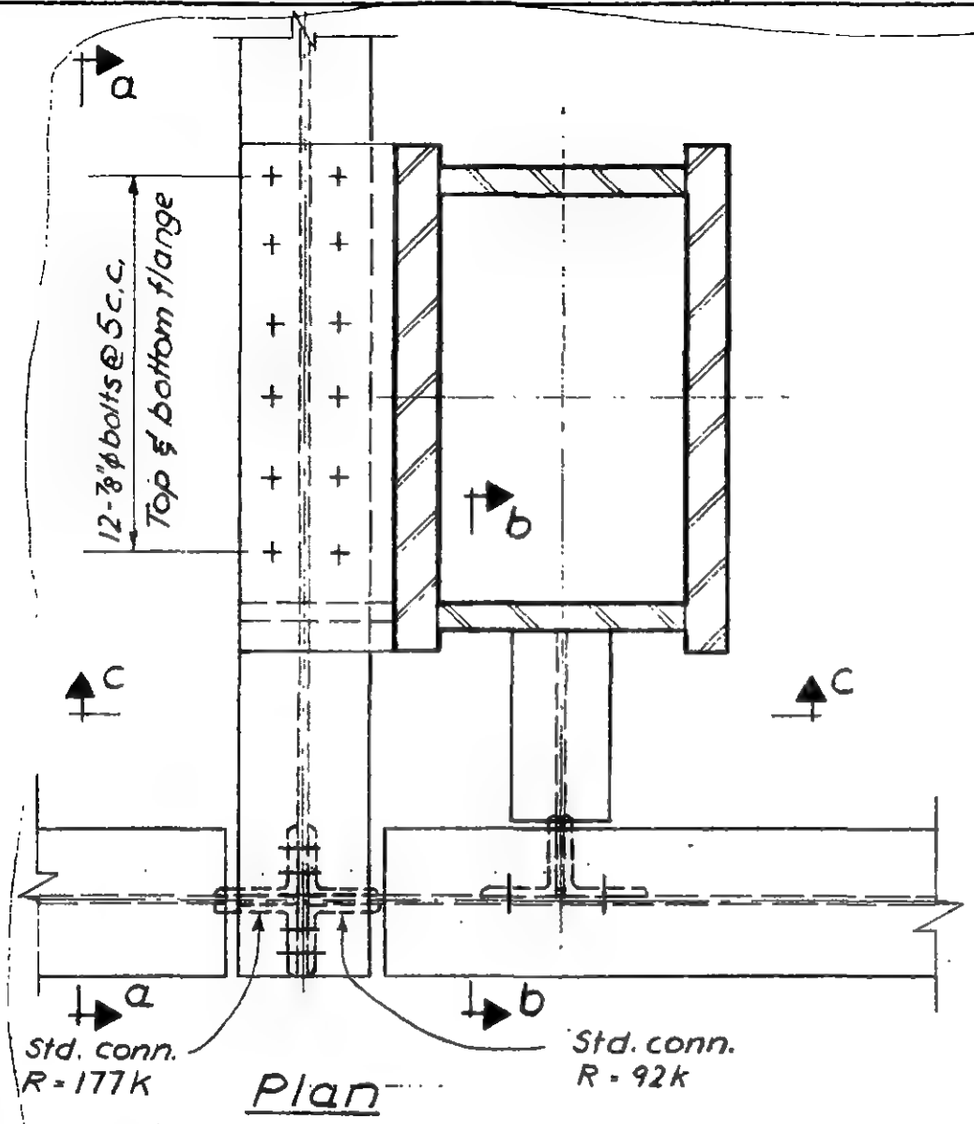

Plan

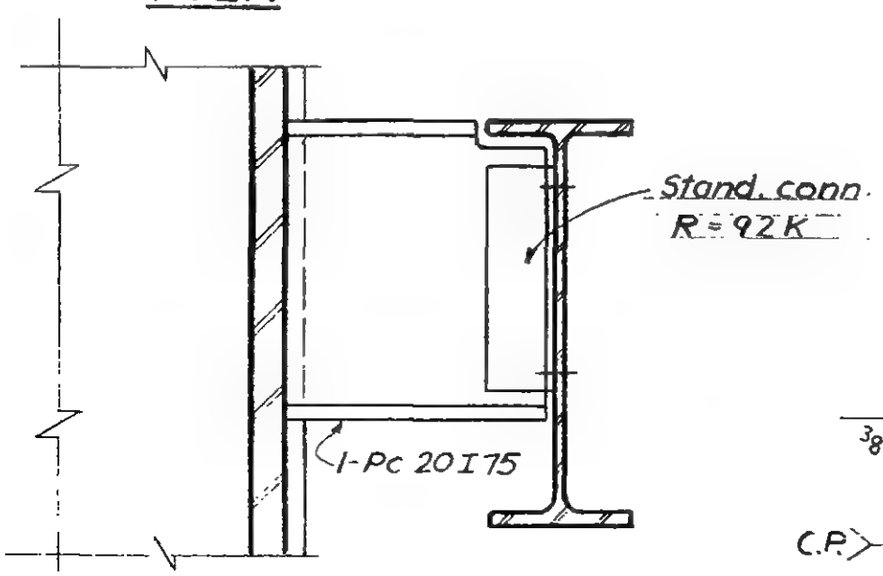

Section b-b

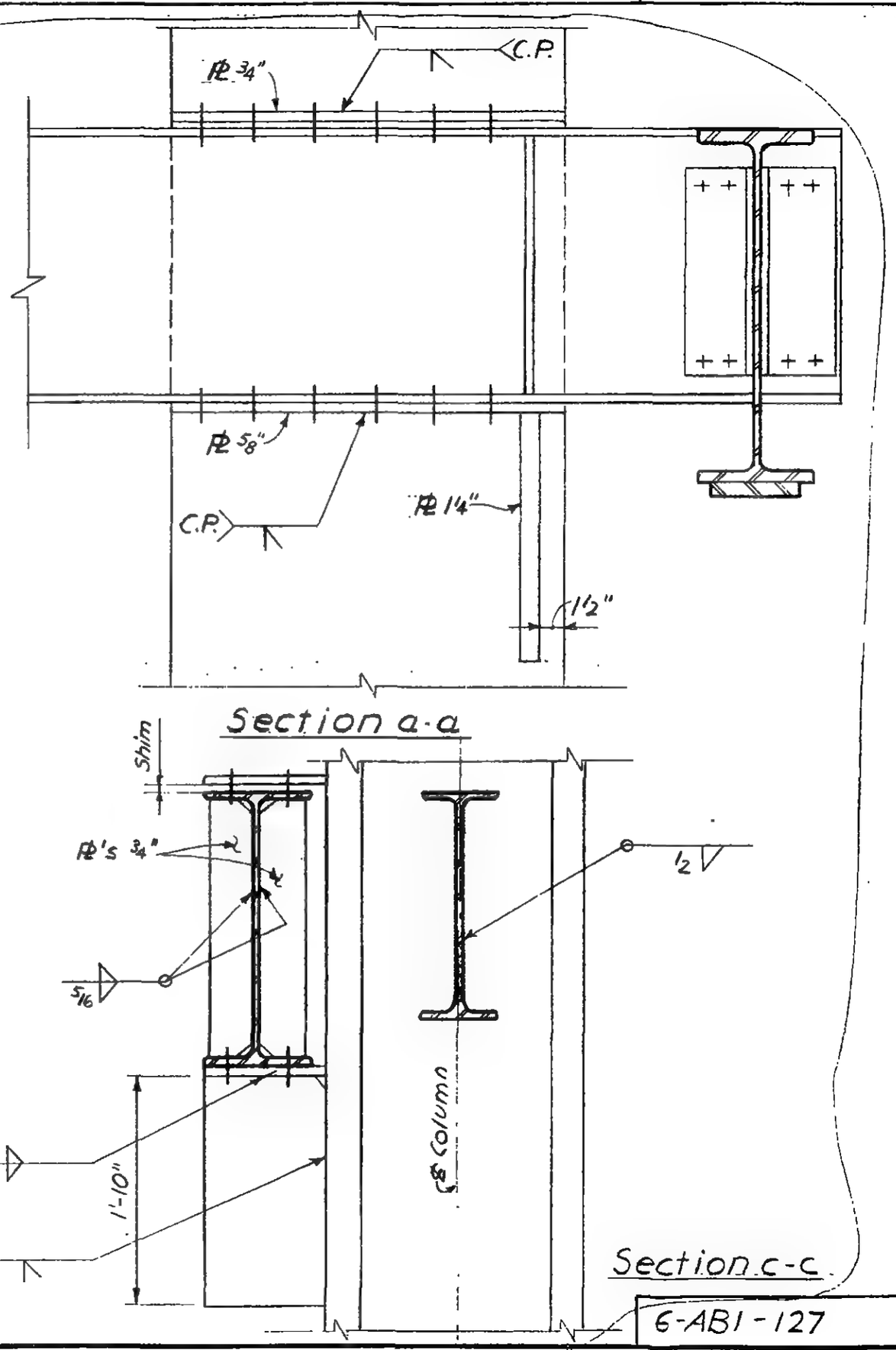

Section a-a

Section c-c

LICENSED PROFESSIONAL ENGINEER
LESLIE E. ROBERTSON
No. 34360
UNIVERSITY OF THE STATE OF NEW YORK

6-AB1-127

SKILLING - HELLE - CHRISTIANSEN - ROBERTSON Structural & Civil Engineers

PROJECT THE WORLD TRADE CENTER | TITLE CONNECTION DETAIL 320B | DATE 3-29-68

REVISIONS

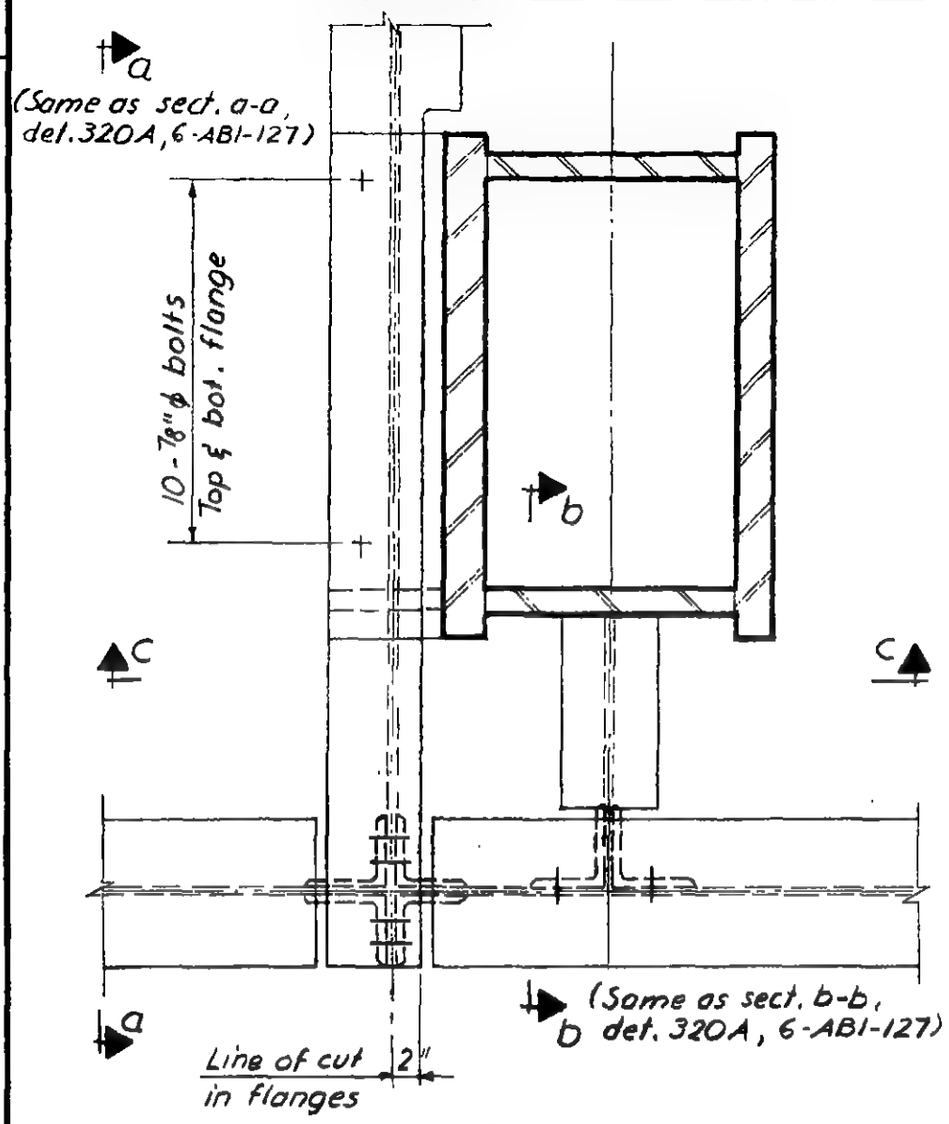

Plan

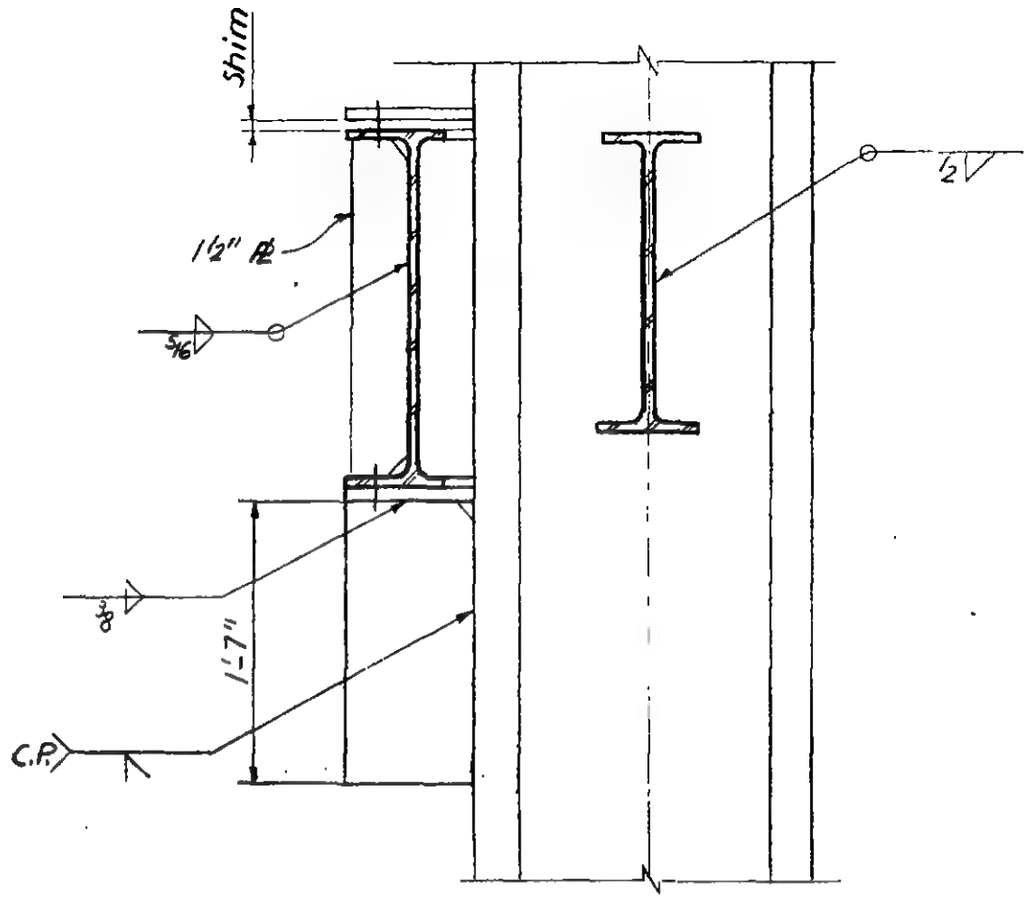

Section c-c

LICENSED PROFESSIONAL ENGINEER
LESLIE E. ROBERTSON
No. 34360
UNIVERSITY OF THE STATE OF NEW YORK

6-ABI-127.1

WORTHINGTON, SKILLING, HELLE & JACKSON — Civil & Structural Engineers

PROJECT THE WORLD TRADE CENTER | TITLE CONNECTION DETAIL 321A | DATE 6-5-67

REVISIONS

9-15-67

11-10-67

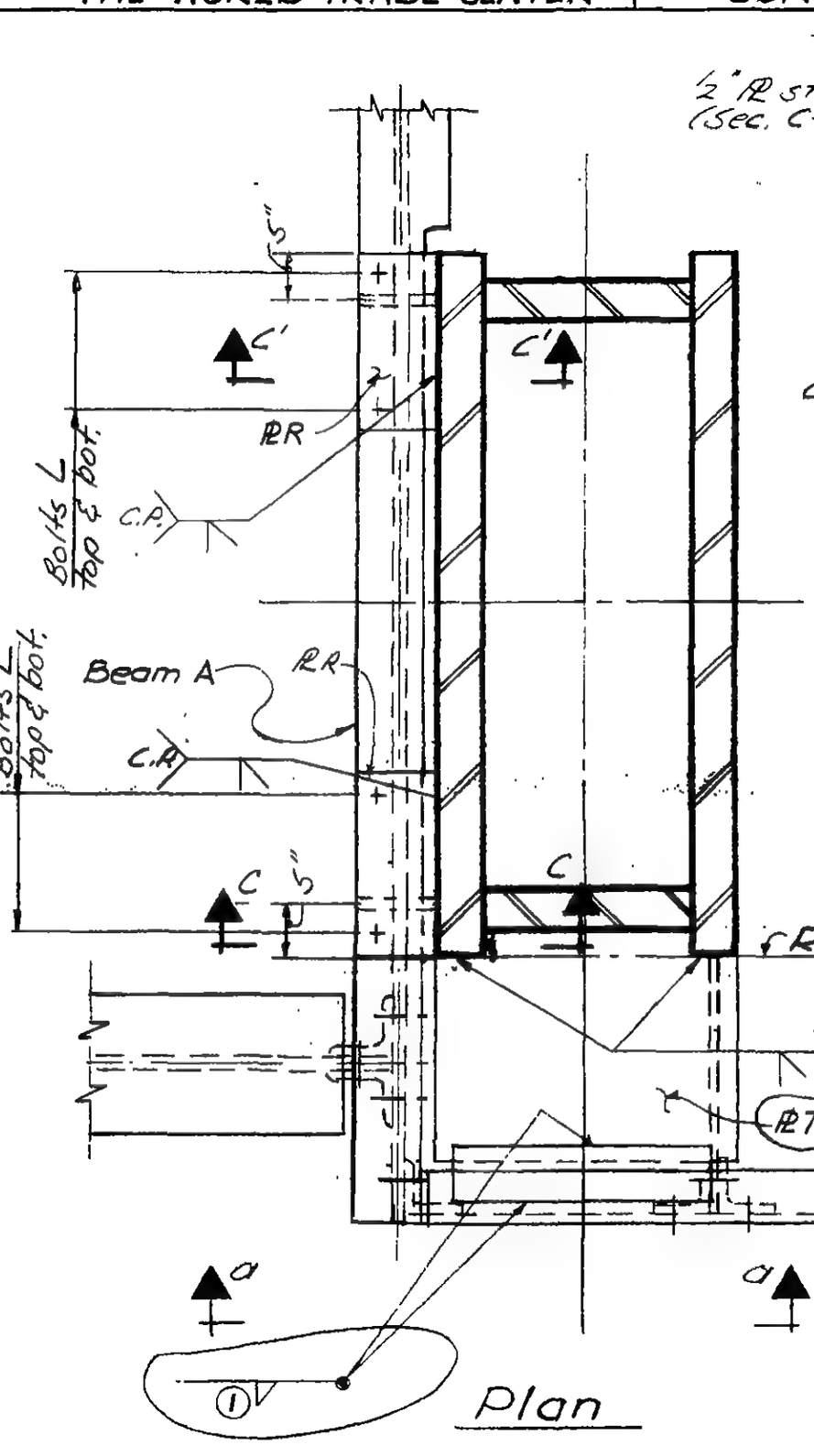

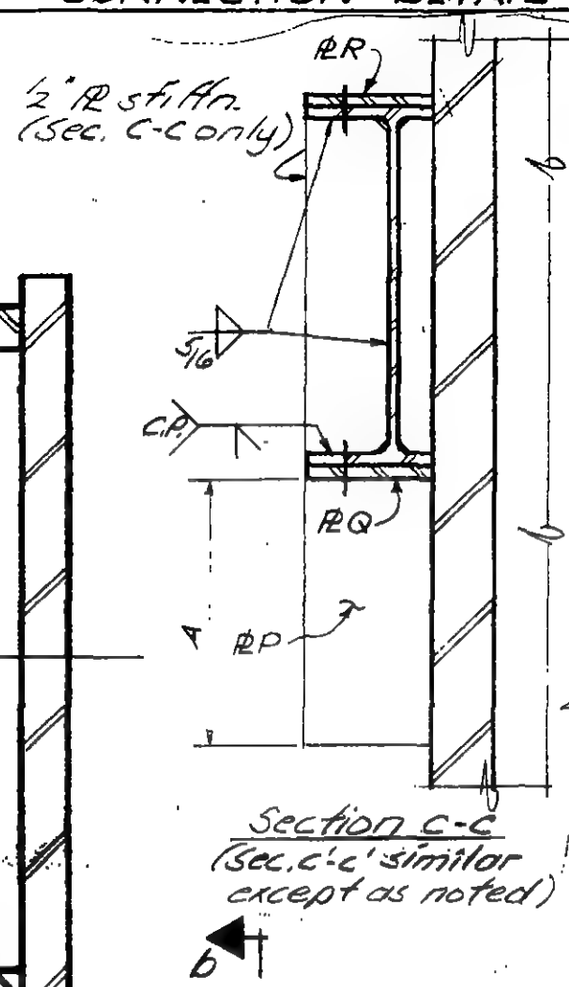

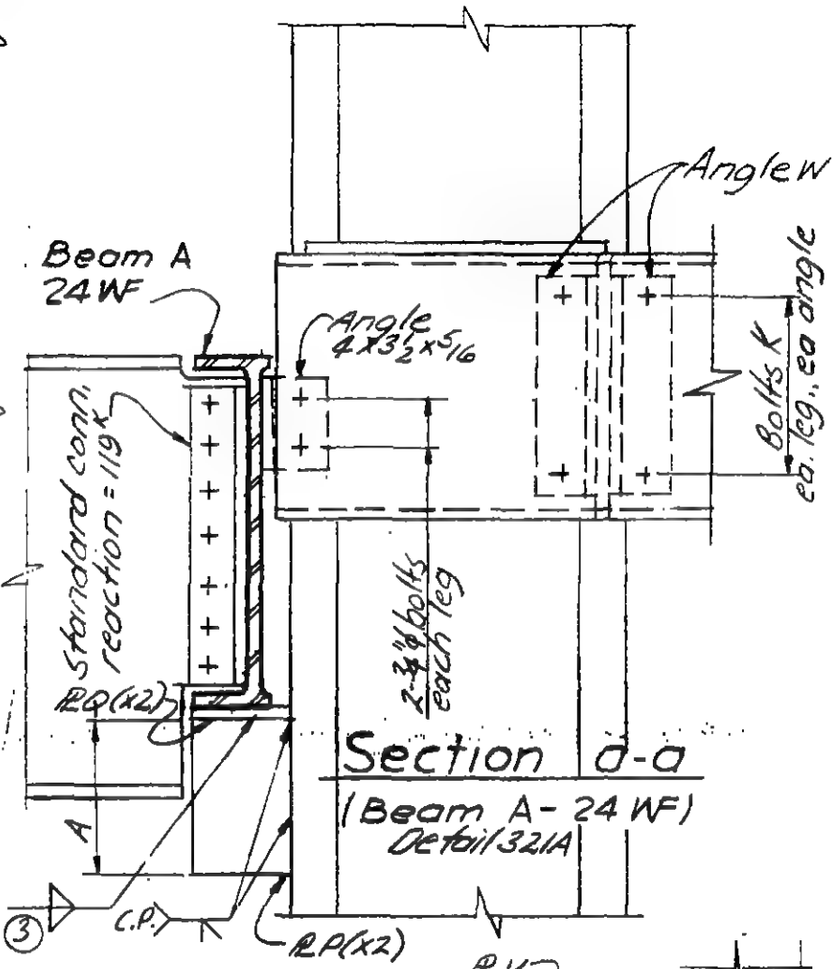

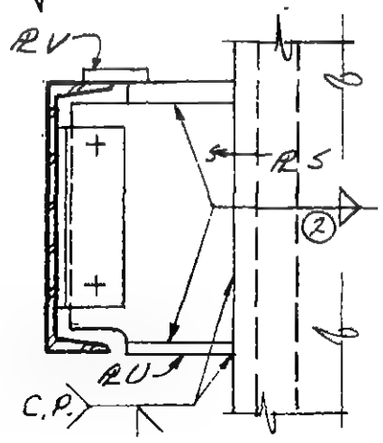

Section b-b

LICENSED PROFESSIONAL ENGINEER
LESLIE E. ROBERTSON
No. 34360
UNIVERSITY OF THE STATE OF NEW YORK

G-ABI-128

SKILLING - HELLE - CHRISTIANSEN - ROBERTSON Structural & Civil Engineers

PROJECT THE WORLD TRADE CENTER | TITLE SCHEDULE FOR DETAIL 321A | DATE 9-15-67

REVISIONS

11-10-67

	321A
PLATES	
P	1"
Q	1"
R	5/8"
S	1/2"
T	1/4"
U	5 x 5/8"
V	4 x 5/8 x 1'-8"
ANGLES	
W	4 x 3/2 x 3/8
DIMENSIONS	
A	1'-6"
BOLTS	
K	4-7/8"ϕ
L	5-1"ϕ
WELDS	
①	9/16
②	1/2
③	1/2

OF THE STATE OF NEW YORK

G-AB1-128.1

WORTHINGTON, SKILLING, HELLE & JACKSON Civil & Structural Engineers

PROJECT THE WORLD TRADE CENTER | TITLE CONNECTION DETAIL 322A | DATE 6-5-67

REVISIONS

9-15-67

11-10-67

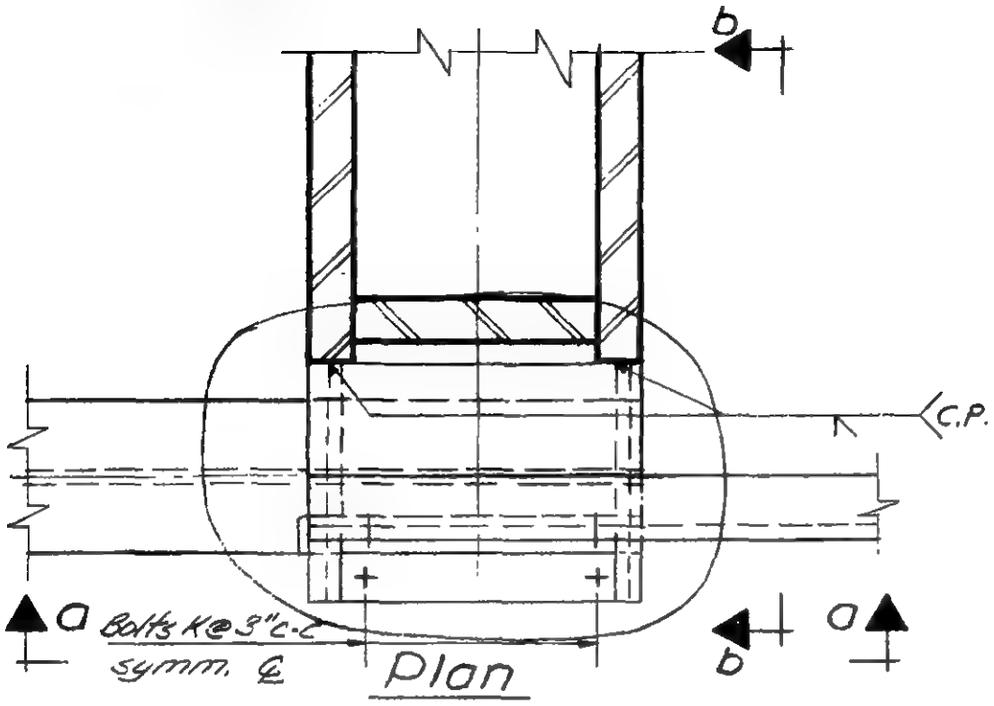

Plan

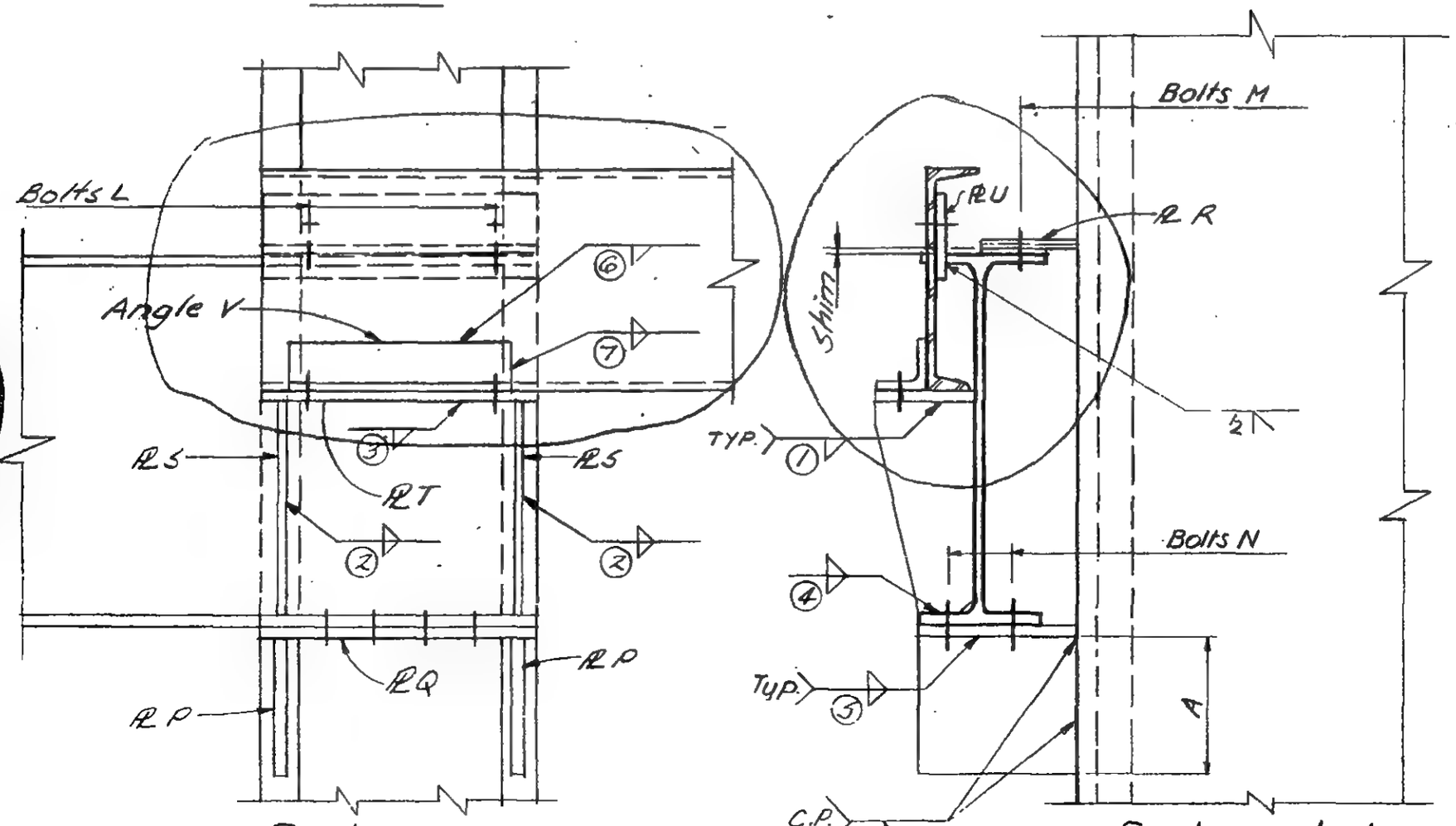

Section a-a

Section b-b

LICENSED PROFESSIONAL ENGINEER
LESLIE E. ROBERTSON
No. 34360
UNIVERSITY OF THE STATE OF NEW YORK

6-ABI-129

SKILLING - HELLE - CHRISTIANSEN - ROBERTSON Structural & Civil Engineers

PROJECT THE WORLD TRADE CENTER | TITLE SCHEDULE FOR DETAIL 322A | DATE 9-15-67

REVISIONS

11-10-67

	322A
PLATE	
P	1"
Q	1"
R	1/2"
S	3/8"
T	3/8"
U	1/2"
ANGLE	
V	3x3x3/8
DIMENSION	
A	1'-8"
BOLTS	
K	4-3/4"ϕ
L	4-3/4"ϕ
M	4-3/4"ϕ
N	8-3/4"ϕ
WELD	
(1)	5/16
(2)	5/16
(3)	5/16
(4)	5/16
(5)	5/16
(6)	5/16
(7)	5/16

G-AB1-129.1

SKILLING - HELLE - CHRISTIANSEN - ROBERTSON Structural & Civil Engineers

PROJECT THE WORLD TRADE CENTER | TITLE CONNECTION DETAIL 322B | DATE 1-24-68

REVISIONS

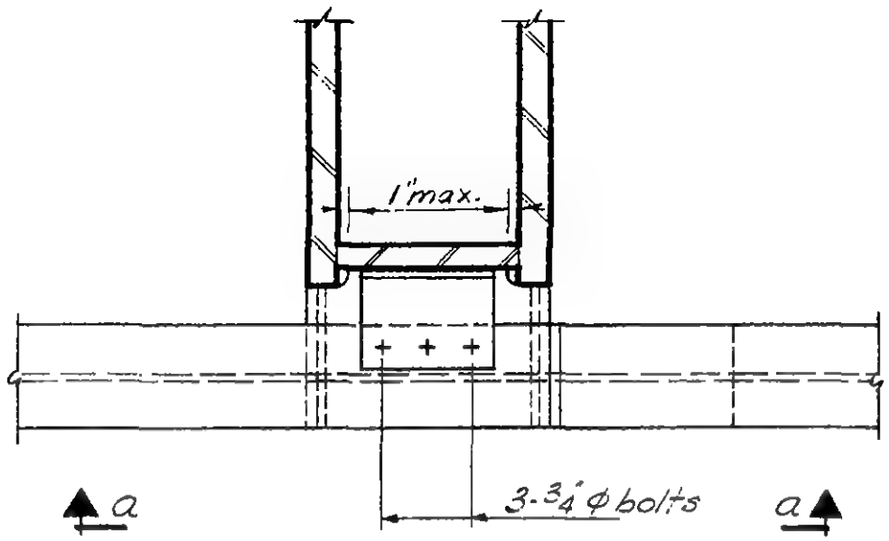

Plan

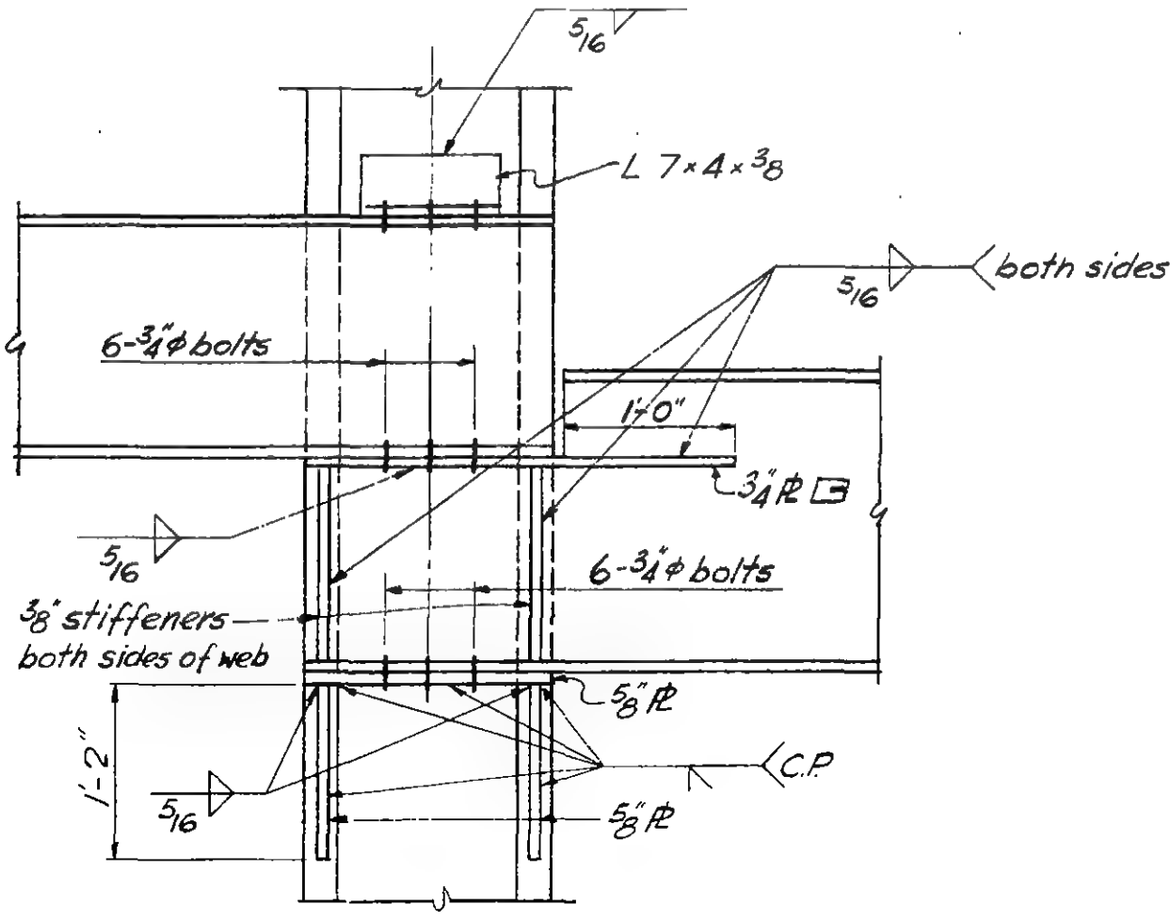

Section a-a

LICENSED PROFESSIONAL ENGINEER
LESLIE E. ROBERTSON
No. 34360
UNIVERSITY OF THE STATE OF NEW YORK

6-AB1-129.2

WORTHINGTON, SKILLING, HELLE & JACKSON — Civil & Structural Engineers

PROJECT	TITLE	DATE
THE WORLD TRADE CENTER	CONNECTION DETAIL 323 A	6-12-67

REVISIONS

7-28-67

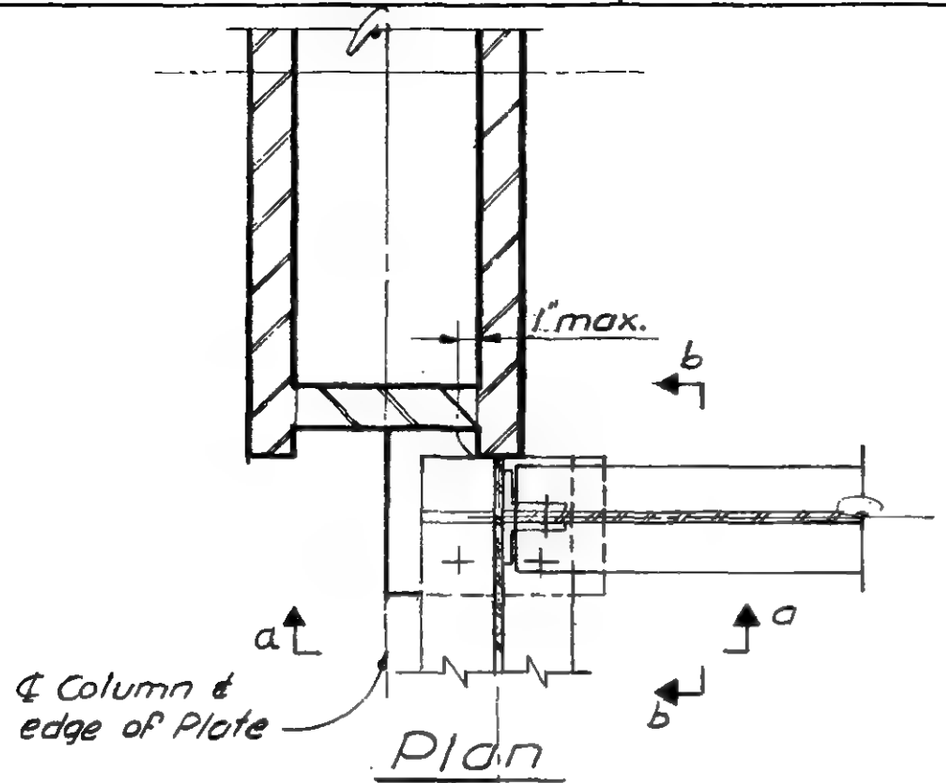

Plan

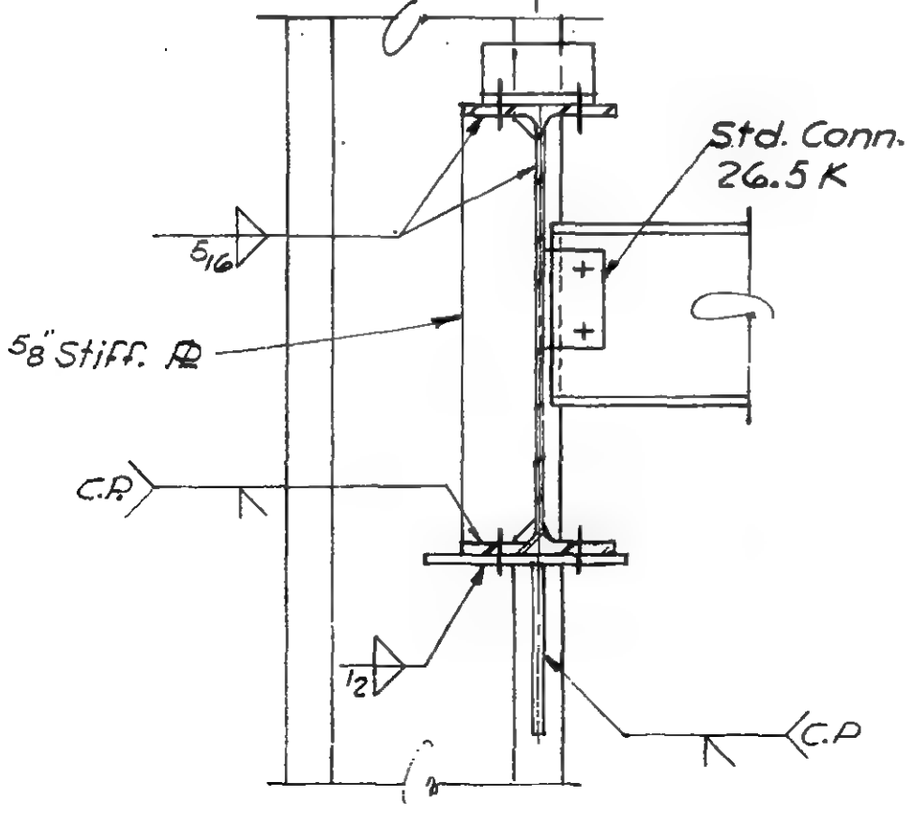

Section a-a

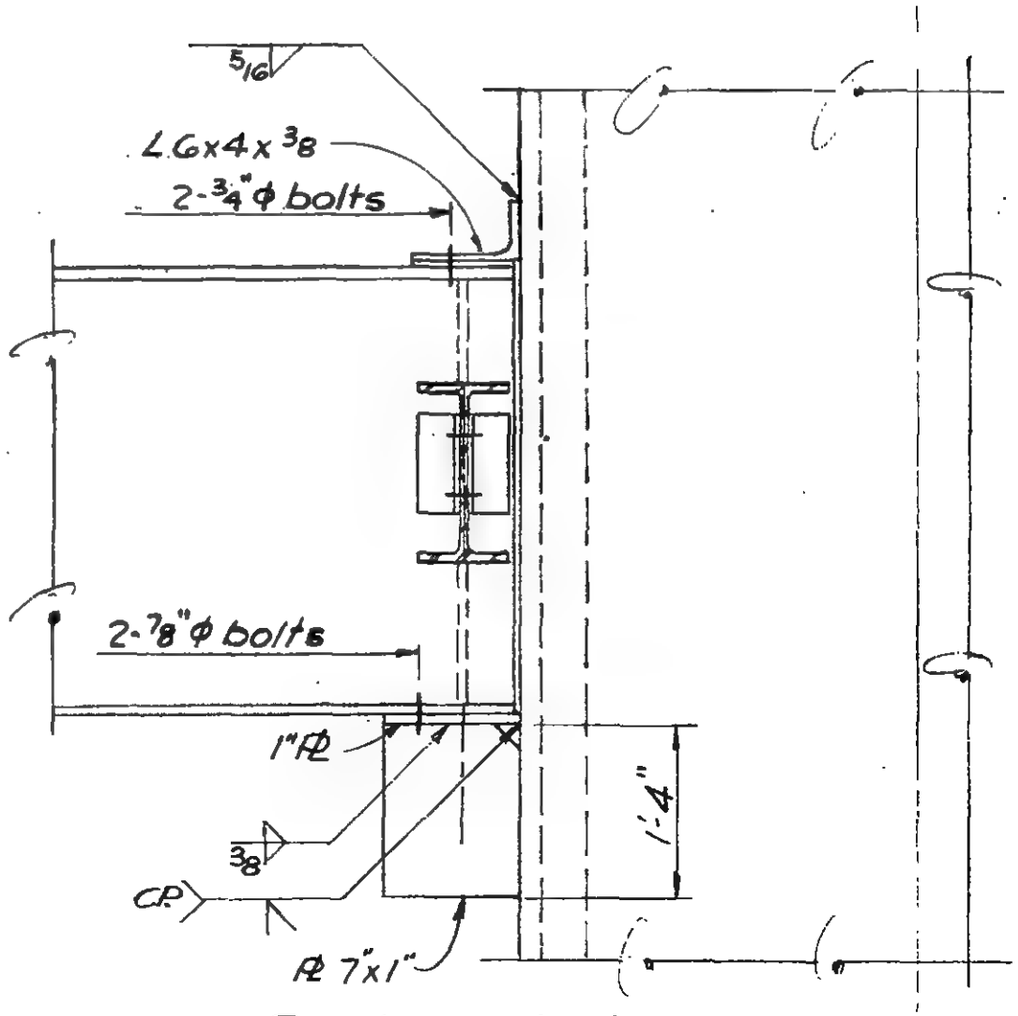

Section b-b

LICENSED PROFESSIONAL ENGINEER
LESLIE E. ROBERTSON
No. 34360
UNIVERSITY OF THE STATE OF NEW YORK

G-AB1-130

SKILLING - HELLE - CHRISTIANSEN - ROBERTSON Structural & Civil Engineers

PROJECT THE WORLD TRADE CENTER | TITLE CONNECTION DETAIL 324A | DATE 6-5-67

REVISIONS
9-15-67
11-10-67

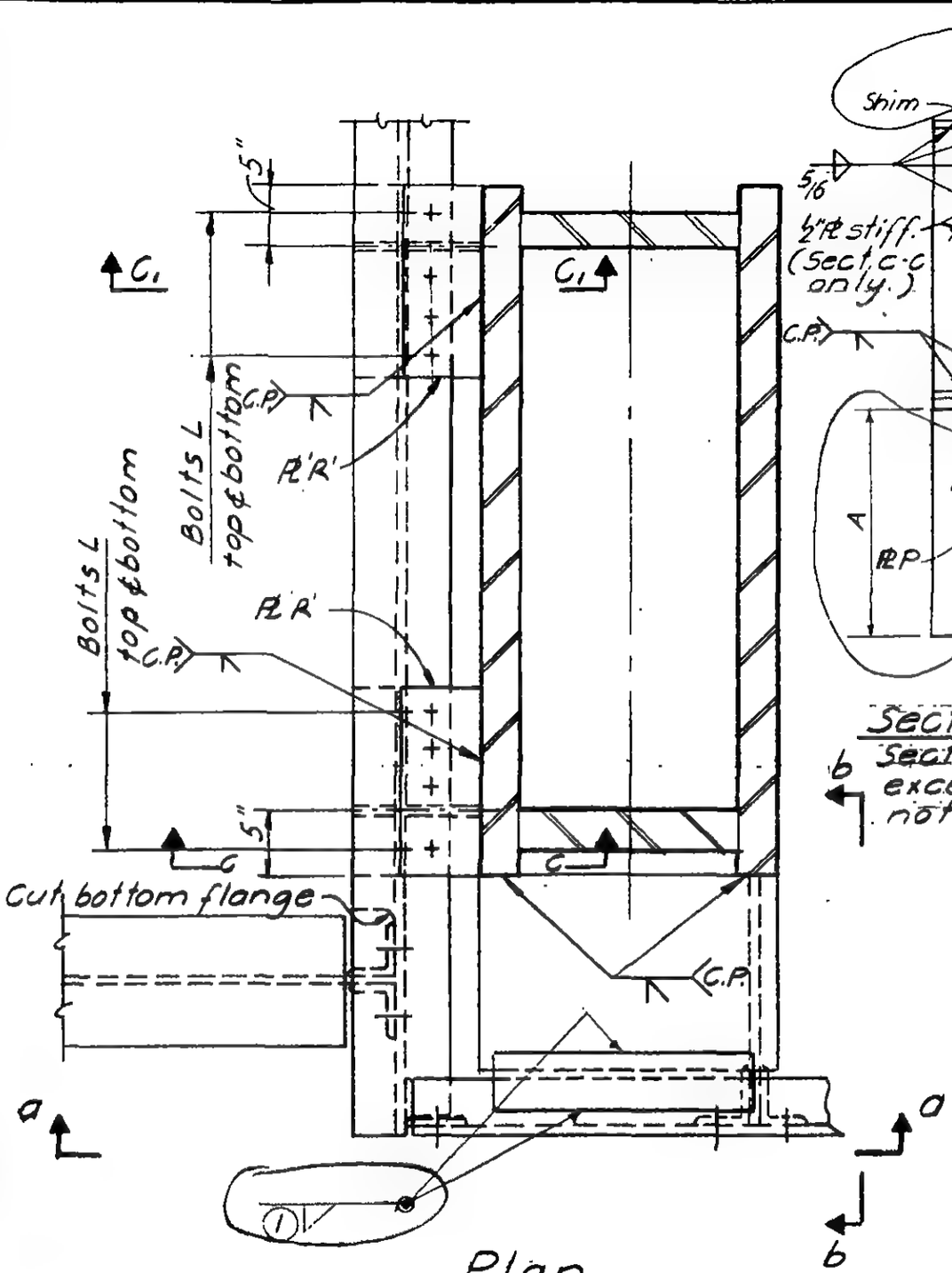

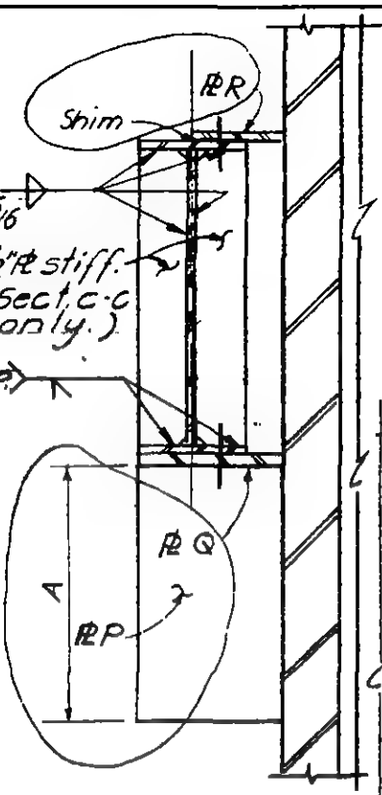

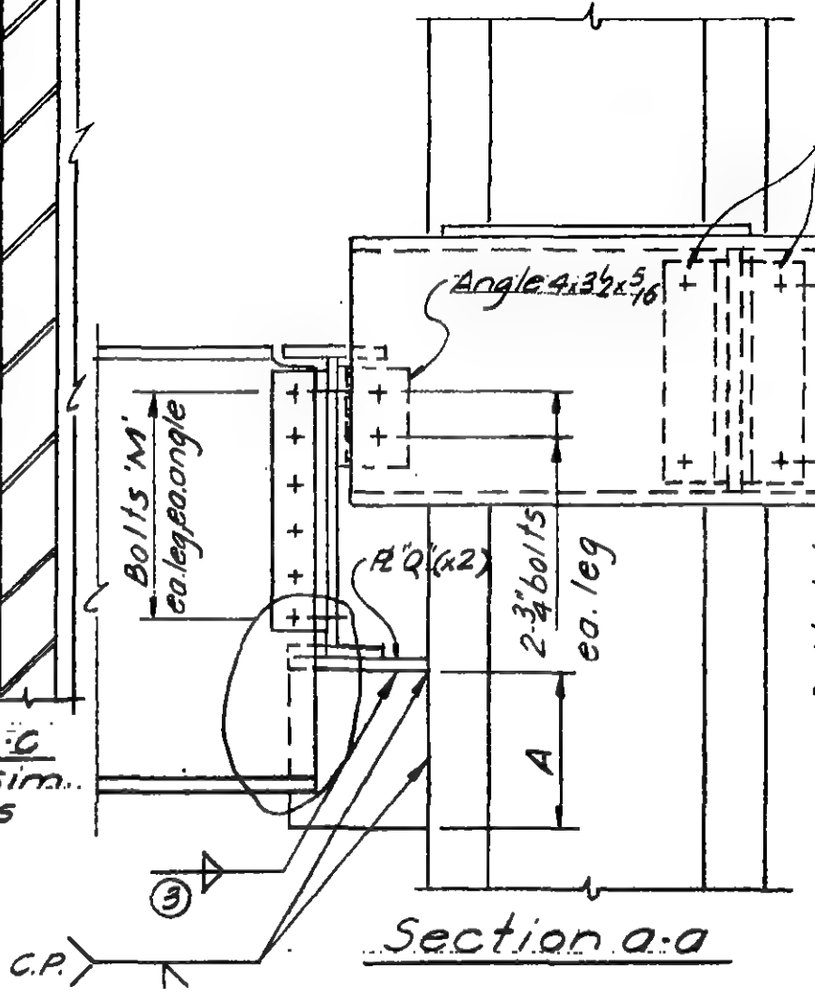

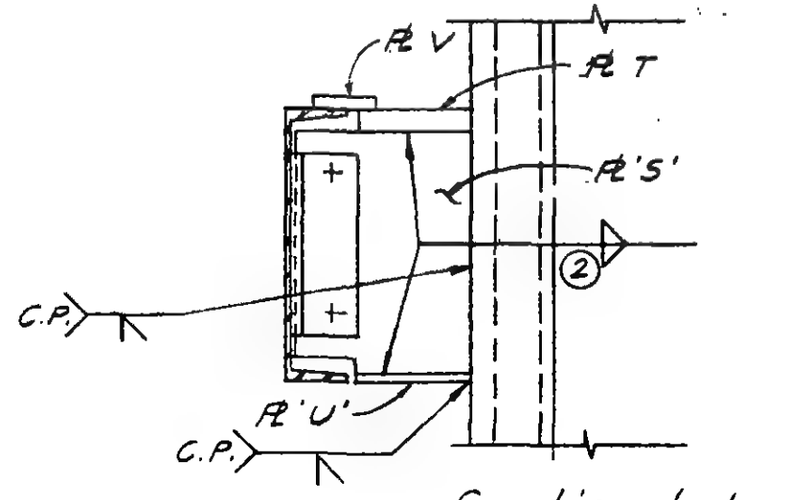

6-AB1-131

SKILLING - HELLE - CHRISTIANSEN - ROBERTSON Structural & Civil Engineers

PROJECT THE WORLD TRADE CENTER | TITLE SCHEDULE FOR DETAIL 324A | DATE 9-15-67

REVISIONS

11-10-67

	324A
PLATE	
P	7/8"
Q	7/8"
R	1/2"
S	1 1/2"
T	1 1/4"
U	5" x 5/8
V	4" x 5/8 x 1'-8"
ANGLE	
W	4 x 3 1/2 x 7/16
DIMENSION	
A	1'-6"
BOLTS	
K	
L	4 - 7/8" ϕ
M	6 - 1" ϕ
WELD	
①	9/16
②	1/2
③	5/16

6-AB1-131.1

SKILLING - HELLE - CHRISTIANSEN - ROBERTSON Structural & Civil Engineers

PROJECT THE WORLD TRADE CENTER | TITLE CONNECTION DETAIL 324 B,C | DATE 10-5-67

REVISIONS

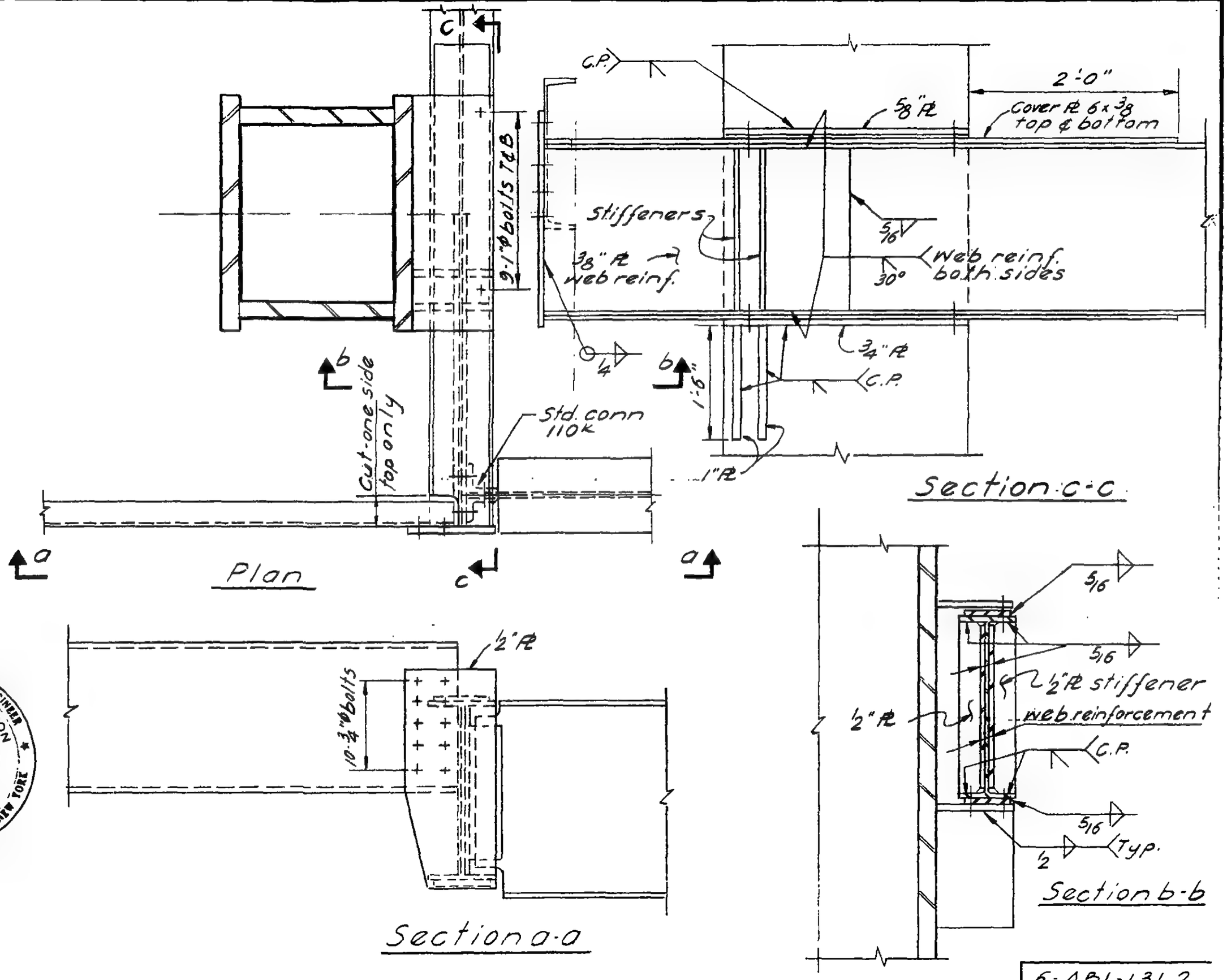

LICENSED PROFESSIONAL ENGINEER
LESLIE E. ROBERTSON
No. 34361
UNIVERSITY OF THE STATE OF NEW YORK

6-ABI-131.2

WORTHINGTON, SKILLING, HELLE & JACKSON — Civil & Structural Engineers

PROJECT: THE WORLD TRADE CENTER | TITLE: CONNECTION DETAIL 325A | DATE: 6-12-67

REVISIONS

7-28-67

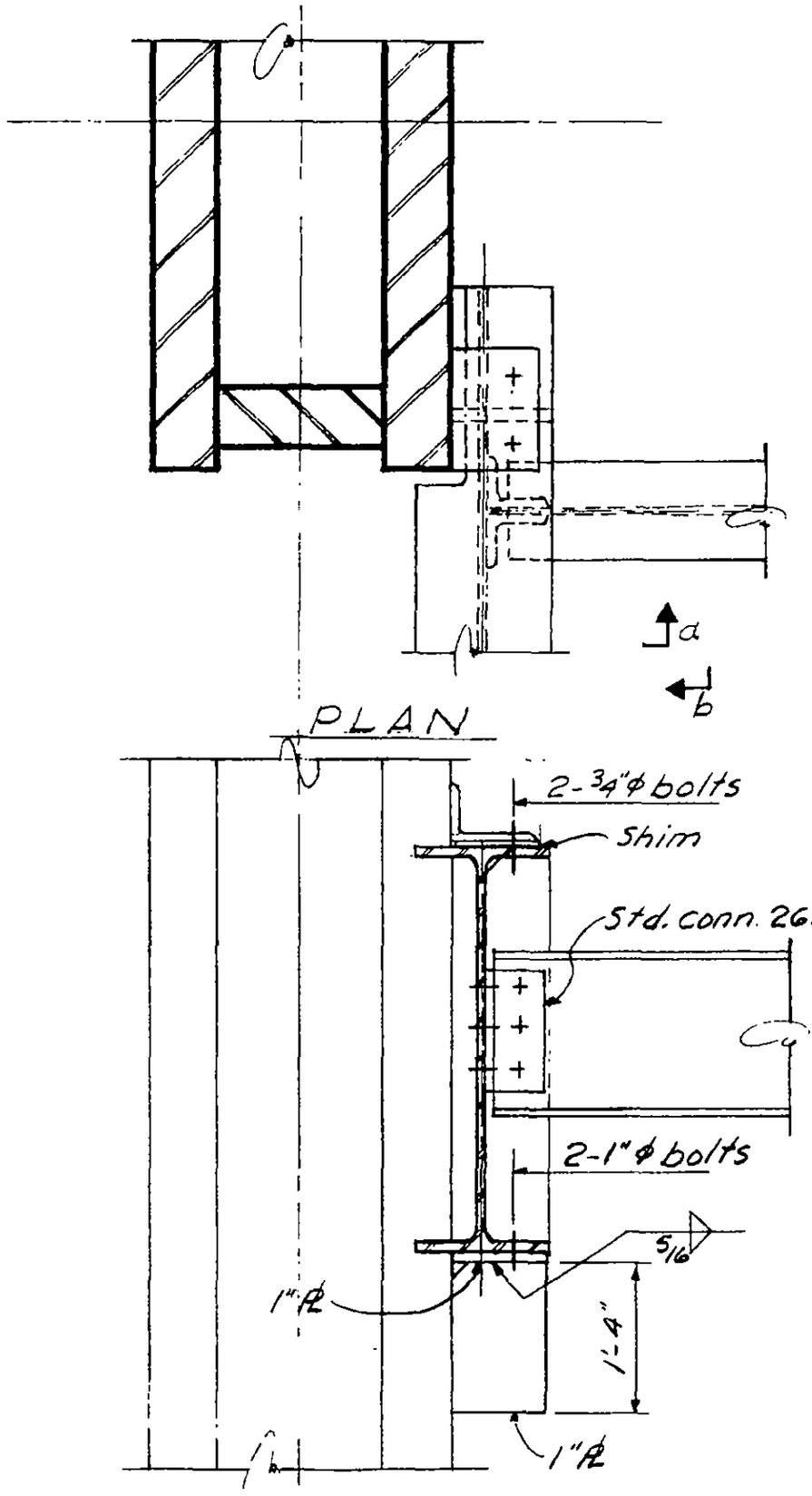

Section a-a

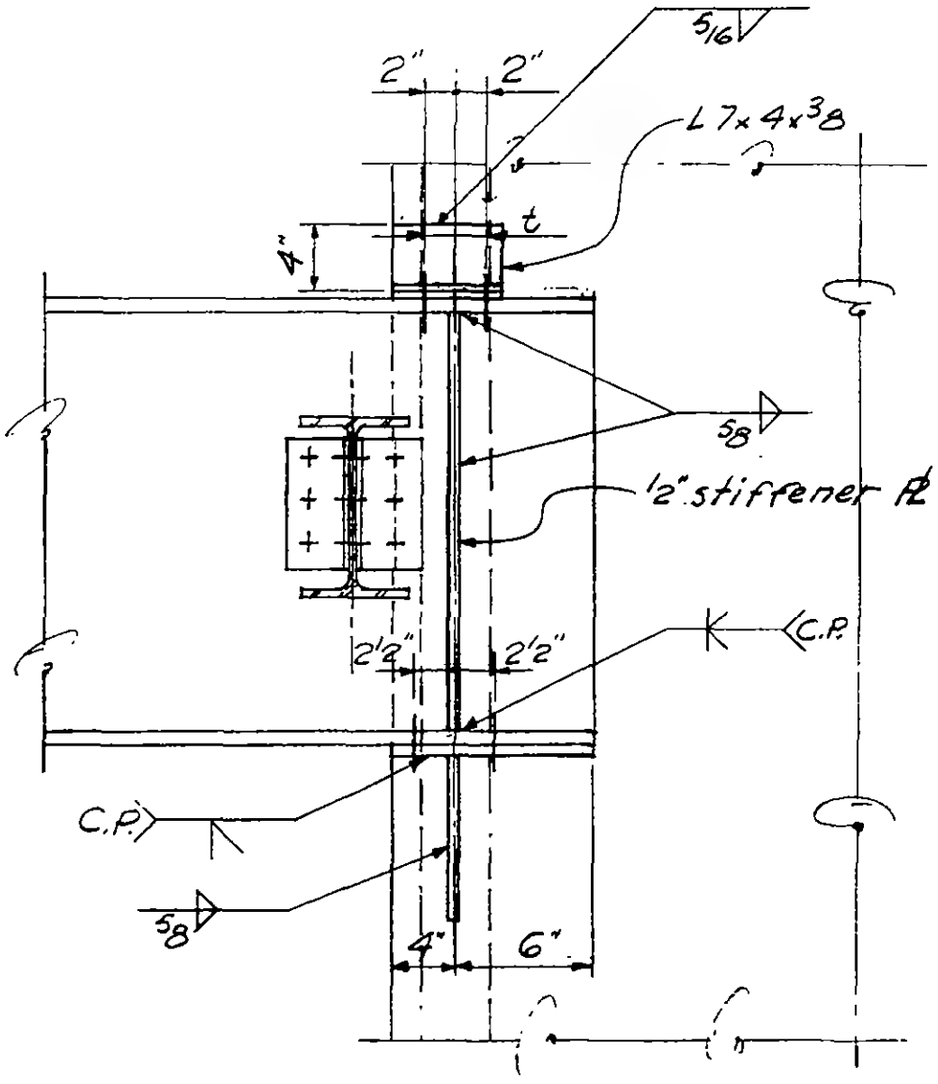

Section b-b

G·AB1-132

LICENSED PROFESSIONAL ENGINEER
LESLIE E. ROBERTSON
No. 34360
UNIVERSITY OF THE STATE OF NEW YORK

WORTHINGTON, SKILLING, HELLE & JACKSON — Civil & Structural Engineers

PROJECT: THE WORLD TRADE CENTER | TITLE: CONNECTION DETAIL 326A | DATE: 6-12-67

REVISIONS

7-28-67

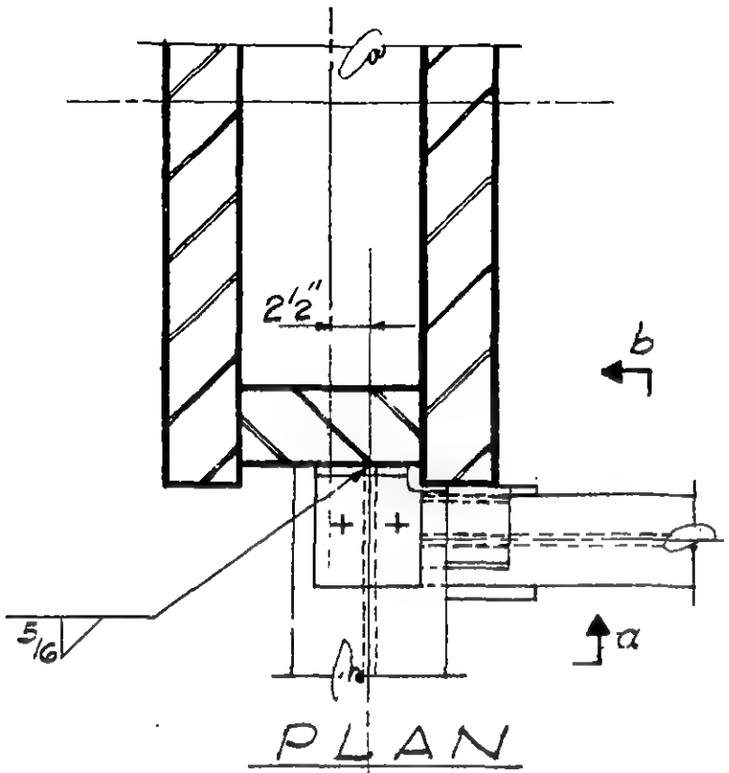

PLAN

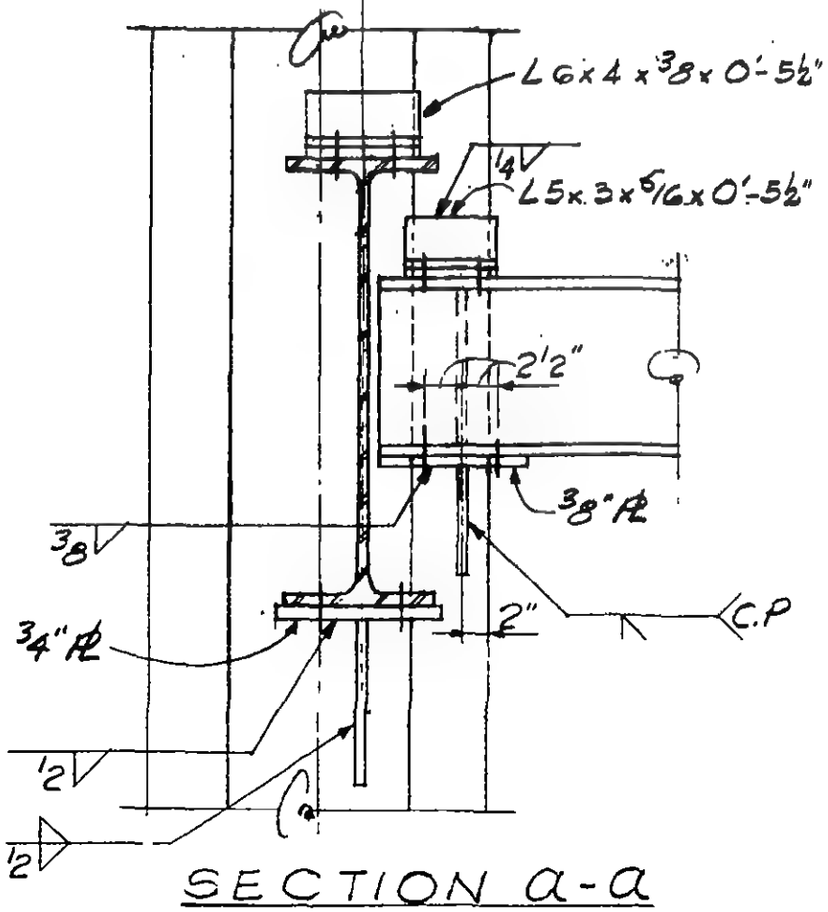

SECTION a-a

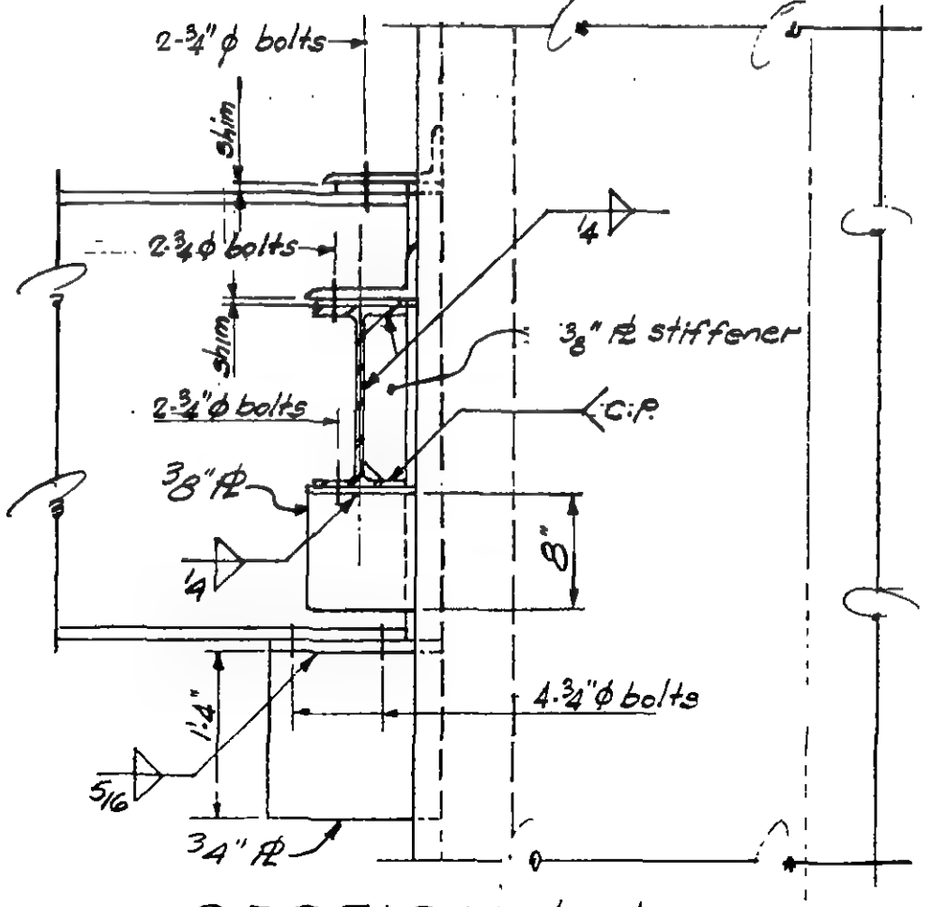

SECTION b-b

LICENSED PROFESSIONAL ENGINEER — LESLIE E. ROBERTSON — No. 34360 — UNIVERSITY OF THE STATE OF NEW YORK

6-AB1-133

WORTHINGTON, SKILLING, HELLE & JACKSON — Civil & Structural Engineers

PROJECT WORLD TRADE CENTER | TITLE CONNECTION DETAIL 327 | DATE 7/20/67

REVISIONS

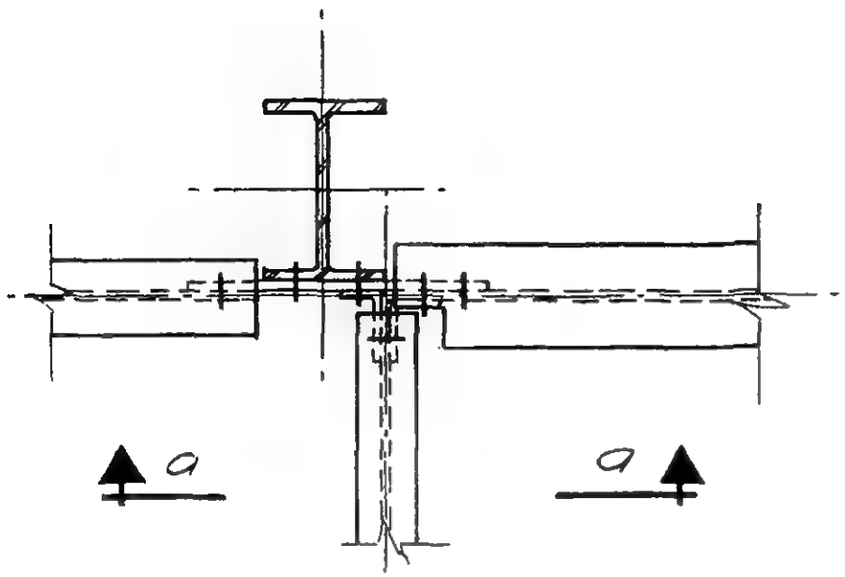

PLAN

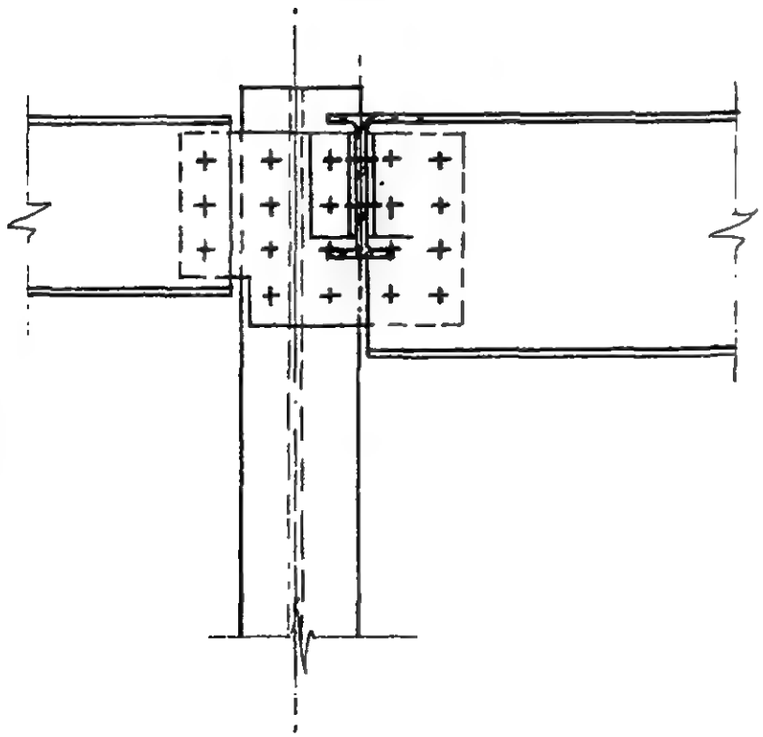

SECTION a-a

LICENSED PROFESSIONAL ENGINEER
LESLIE E. ROBERTSON
No. 24360
UNIVERSITY OF THE STATE OF NEW YORK

G-ABI-134

WORTHINGTON, SKILLING, HELLE & JACKSON : Civil & Structural Engineers

PROJECT THE WORLD TRADE CENTER | TITLE CONNECTION DETAIL 328A | DATE 7/14/67

REVISIONS

8-5-67

9-29-67

11-14-67

12-21-67

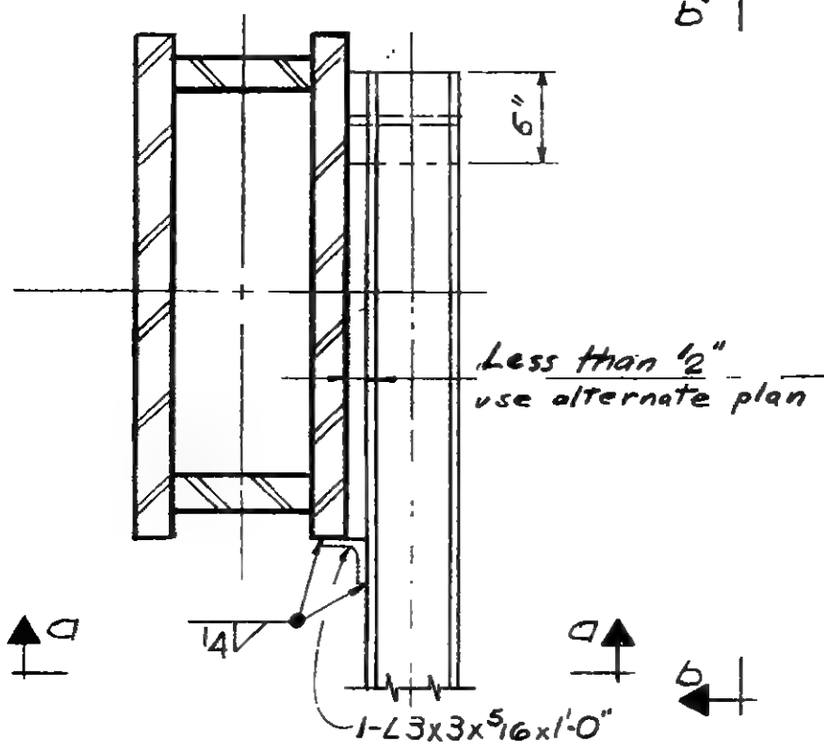

Plan

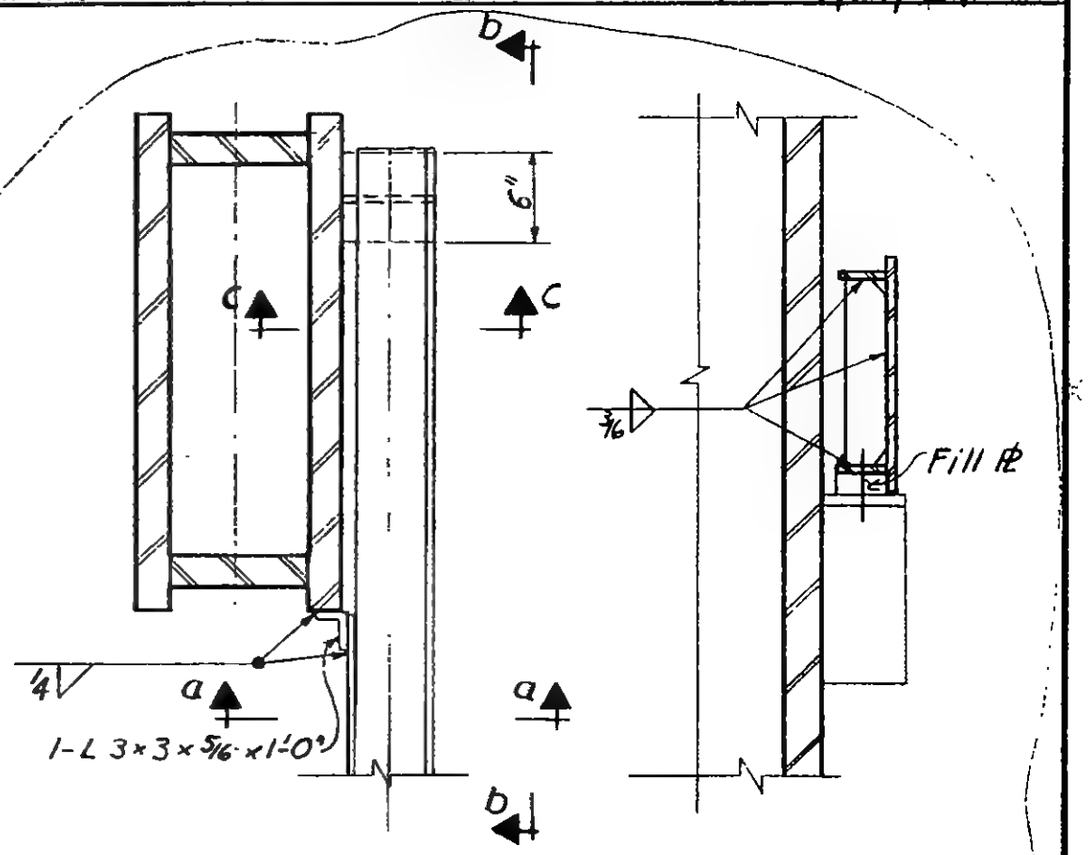

Alternate Plan

Section c-c

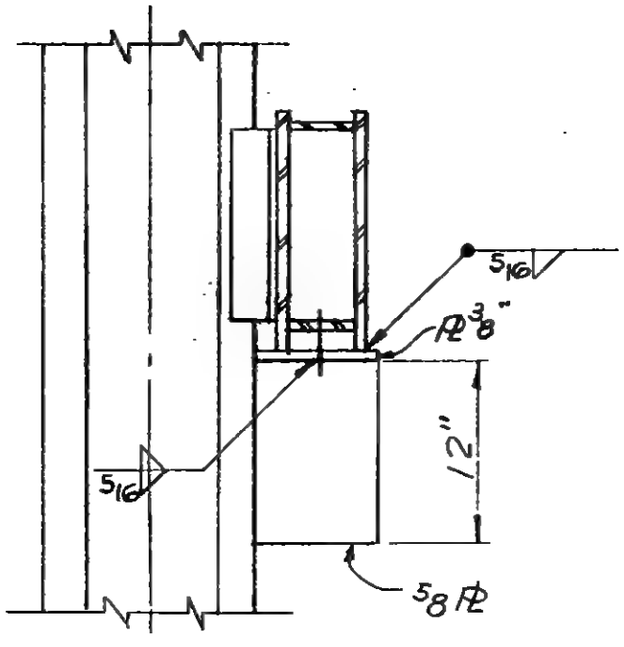

Section a-a

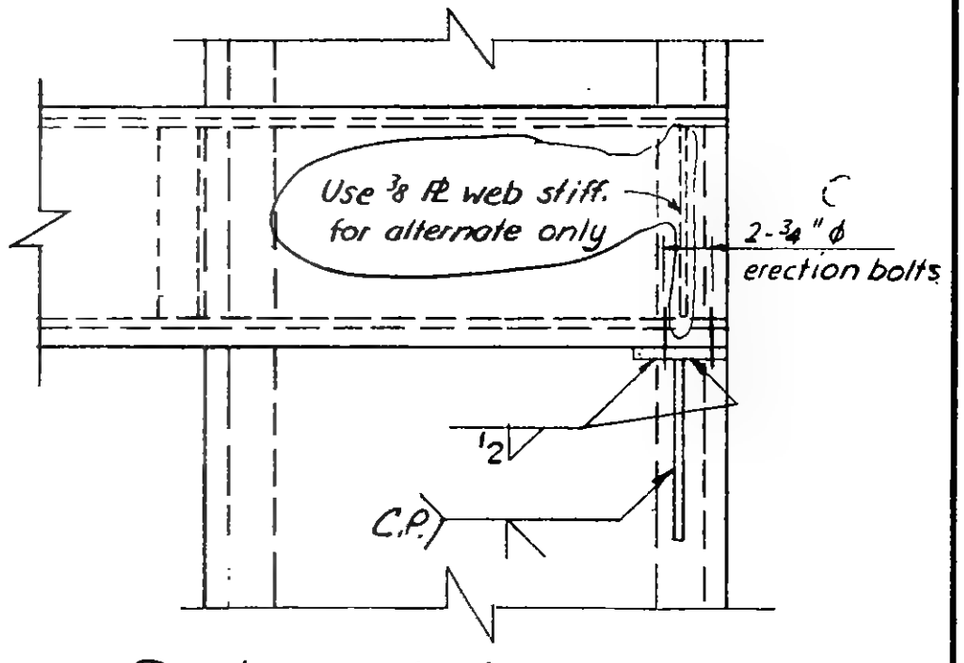

Section b-b

6-AB1-135

LICENSED PROFESSIONAL ENGINEER
LESLIE E. ROBERTSON
No. 34560
STATE OF NEW YORK

WORTHINGTON, SKILLING, HELLE & JACKSON — Civil & Structural Engineers

PROJECT THE WORLD TRADE CENTER | TITLE CONNECTION DETAIL 329 A, | DATE 6-12-67

REVISIONS

6-30-67

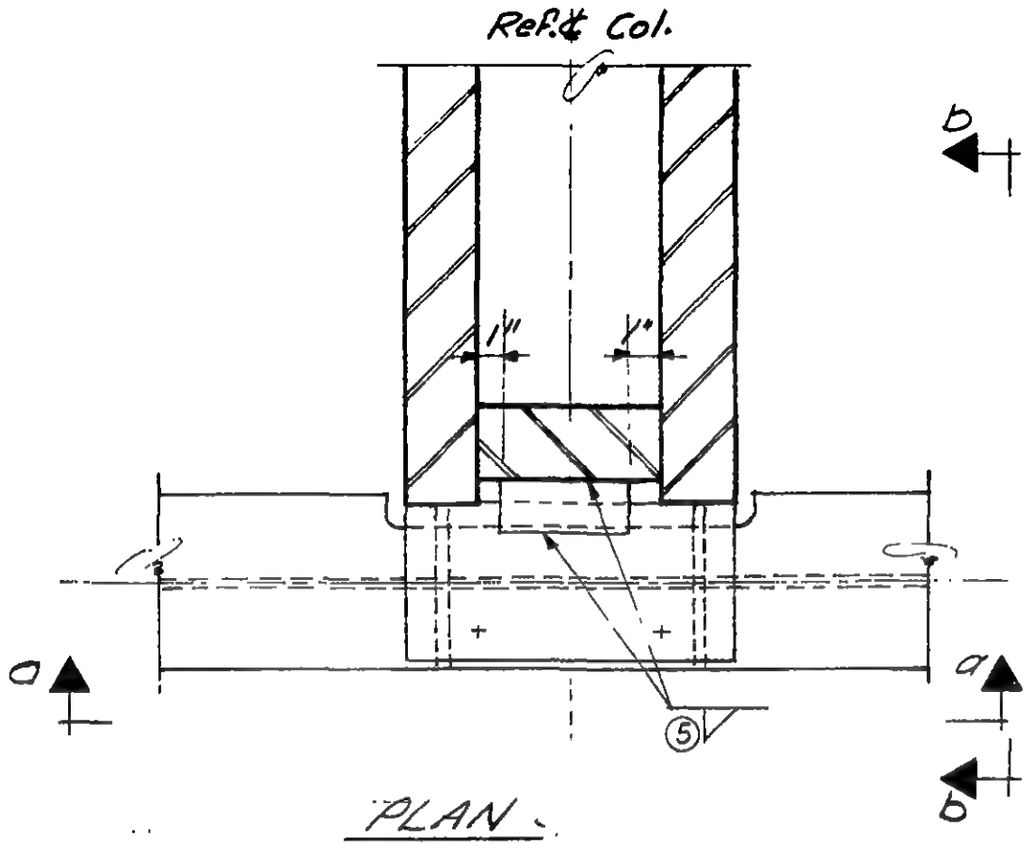

PLAN

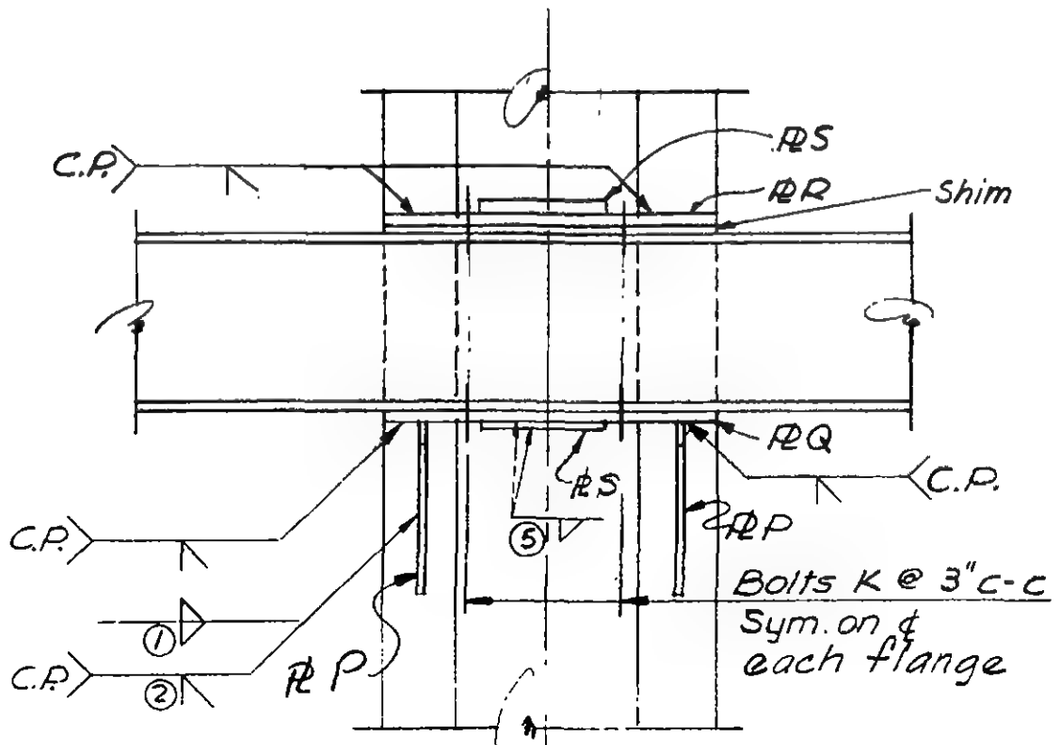

SECTION a-a

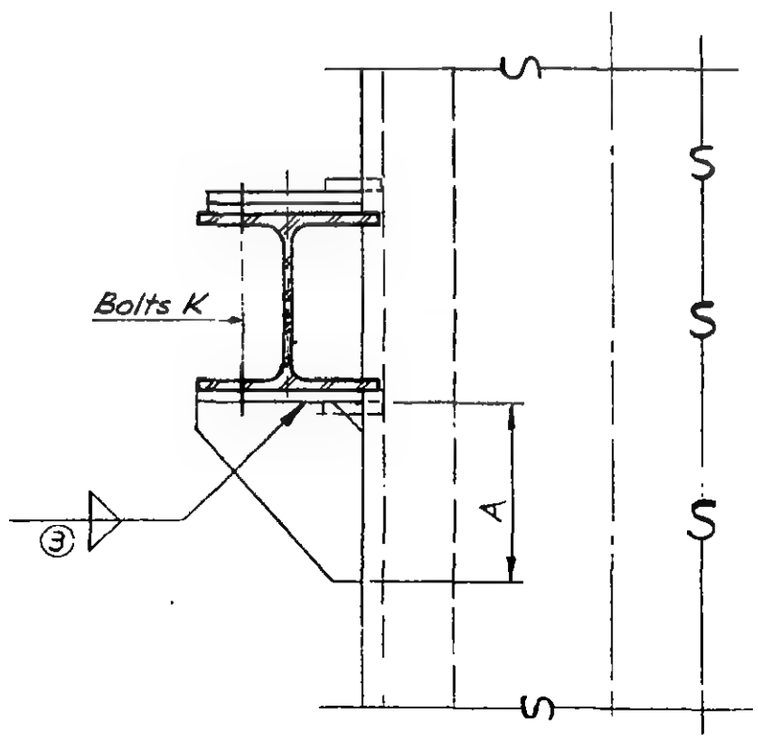

LICENSED PROFESSIONAL ENGINEER
LESLIE E. ROBERTSON
No. 34360
UNIVERSITY OF THE STATE OF NEW YORK

6-AB1-136

WORTHINGTON, SKILLING, HELLE & JACKSON — Civil & Structural Engineers

PROJECT: THE WORLD TRADE CENTER | TITLE: SCHEDULE FOR DETAIL 329 A | DATE: 6-30-67

REVISIONS

7-28-67

	329 A
PLATES	
P	7/8"
Q	1 1/4"
R	1 1/4"
S	3" x 5/16"
DIMENSIONS	
A	1'-0"
BOLTS	
K	4-3/4"ϕ (A325)
WELDS	
②	C.P.
③	5/16
⑤	5/16

LICENSED PROFESSIONAL ENGINEER
LESLIE E. ROBERTSON
No. 34360
CITY OF THE STATE OF NEW YORK

6-AB1-136.1

WORTHINGTON, SKILLING, HELLE & JACKSON — Civil & Structural Engineers

PROJECT: THE WORLD TRADE CENTER | TITLE: CONNECTION DETAIL 330 (A, B, C) | DATE: 5-22-67

REVISIONS

10-2-67

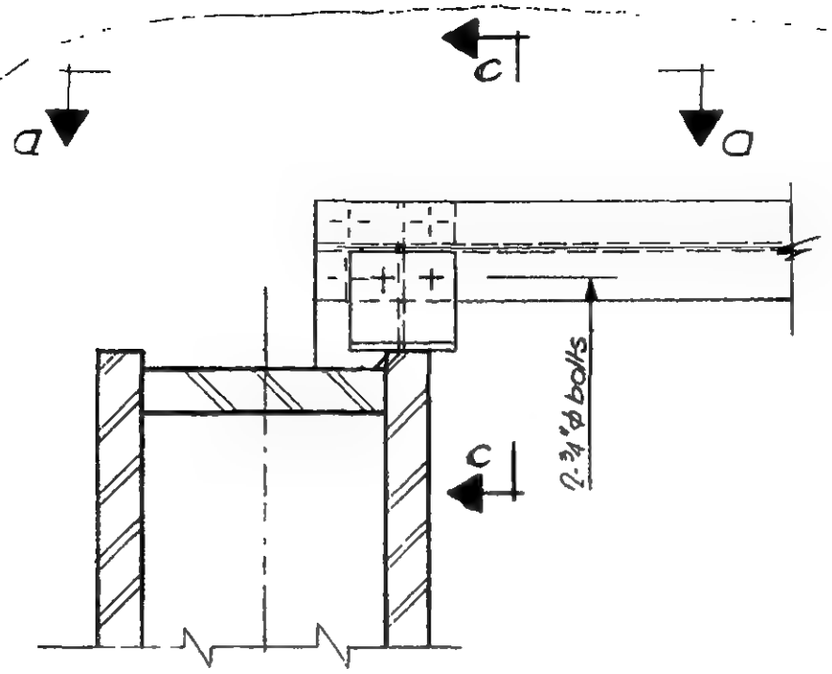

Plan

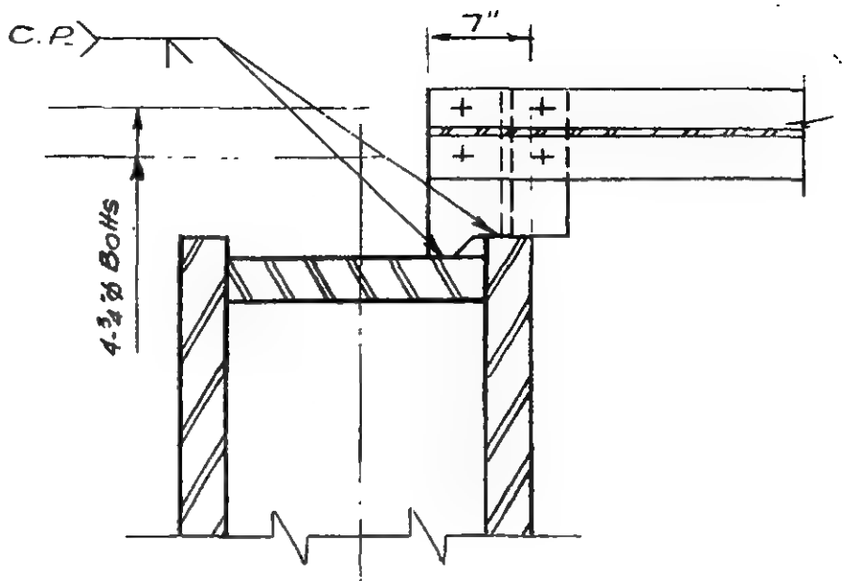

Section b-b

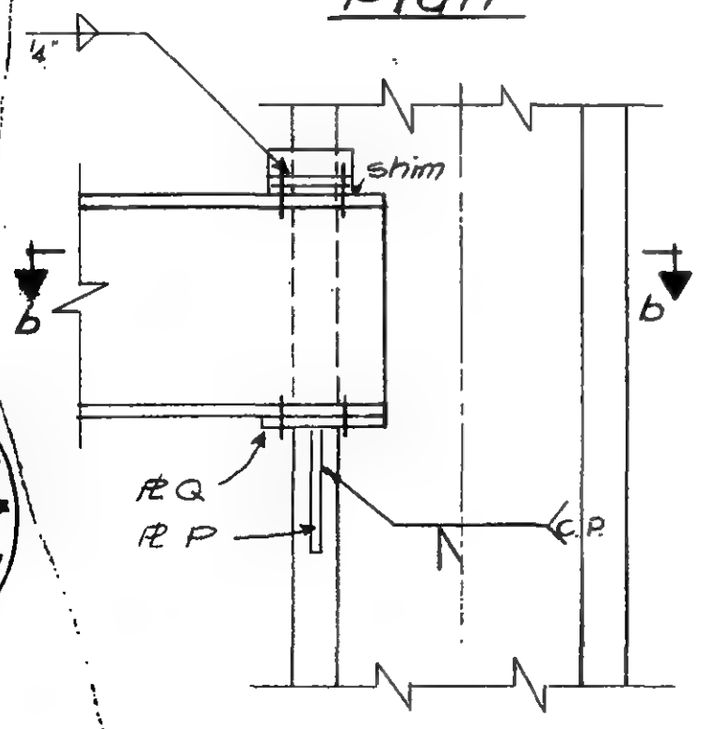

Section a-a

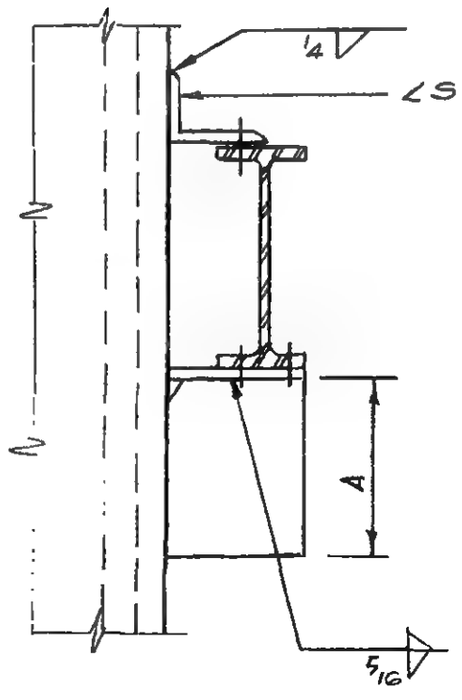

Section c-c

LICENSED PROFESSIONAL ENGINEER
LESLIE E. ROBERTSON
No. 34360
UNIVERSITY OF THE STATE OF NEW YORK

6-AB1-137

SKILLING - HELLE - CHRISTIANSEN - ROBERTSON Structural & Civil Engineers

PROJECT THE WORLD TRADE CENTER | TITLE SCHEDULE FOR DETAIL 330 A,B,C. | DATE 10-2-67

REVISIONS

	330 A	330 B	330 C			
PLATES						
P	5/8"	3/4"	3/4"			
Q	5/8"	3/4"	3/4"			
ANGLE						
S	4 x 3 1/2 x 5/16	7 x 4 x 3/8	4 x 3 1/2 x 5/16			
DIMENSIONS						
A	0'-8"	0'-10"	0'-8"			

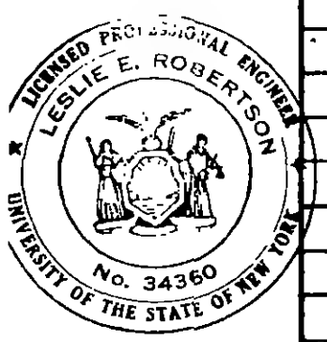

G-ABI-137.1

WORTHINGTON, SKILLING, HELLE & JACKSON — Civil & Structural Engineers

PROJECT: THE WORLD TRADE CENTER | TITLE: CONNECTION DETAIL 331A | DATE: 6-12-67

REVISIONS

7-28-67

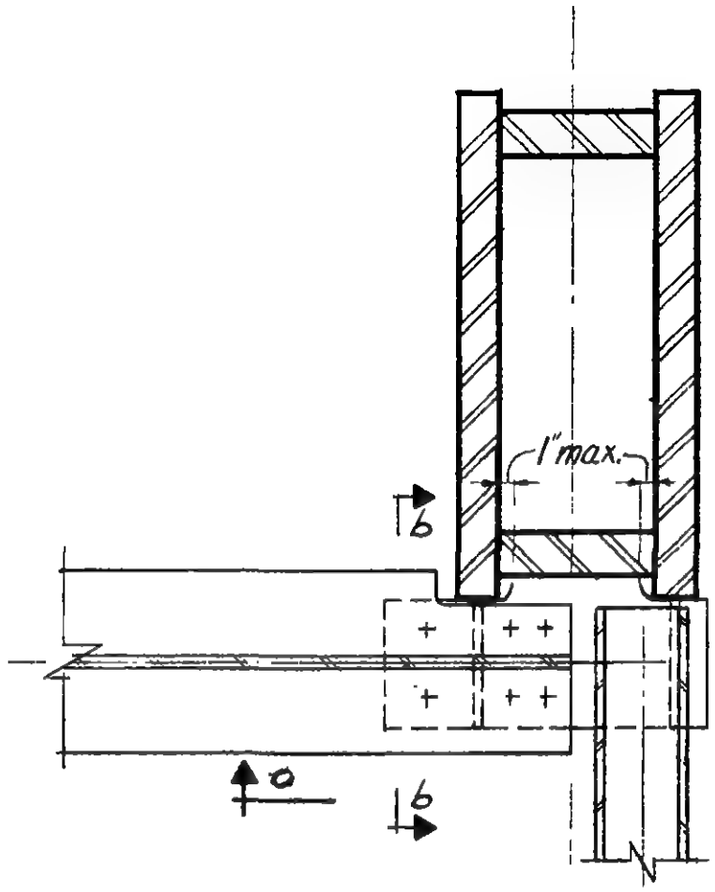

Plan c-c

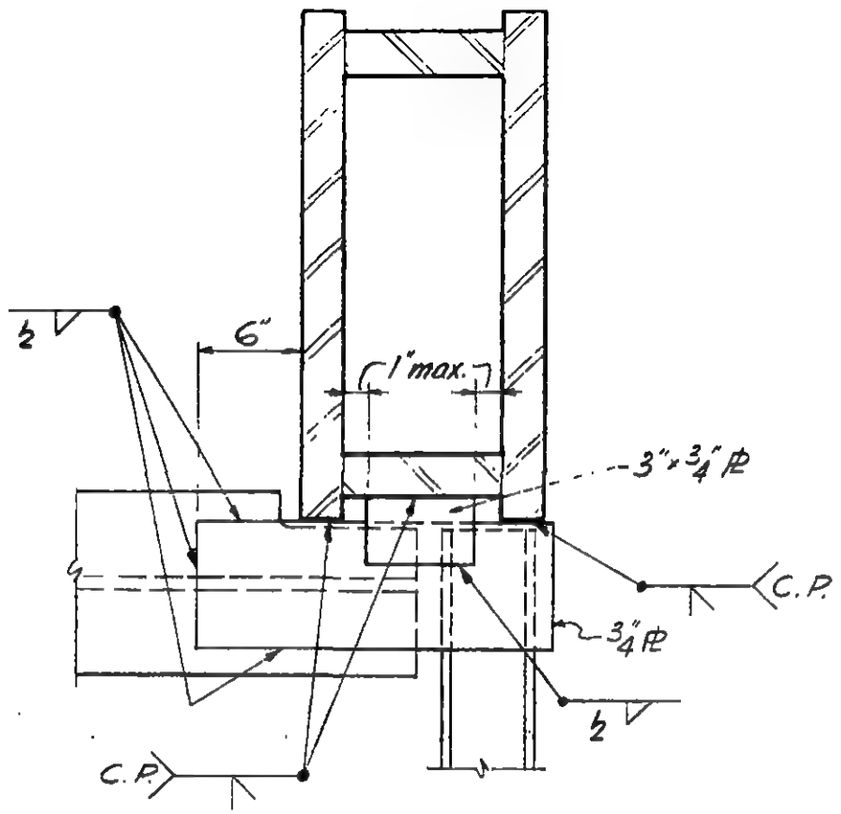

Plan d-d

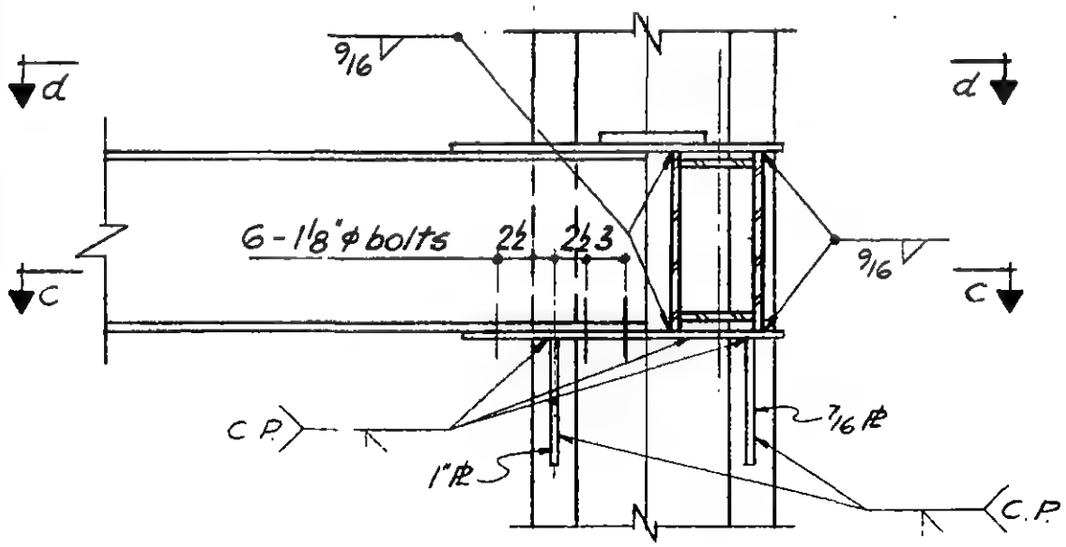

Section a-a

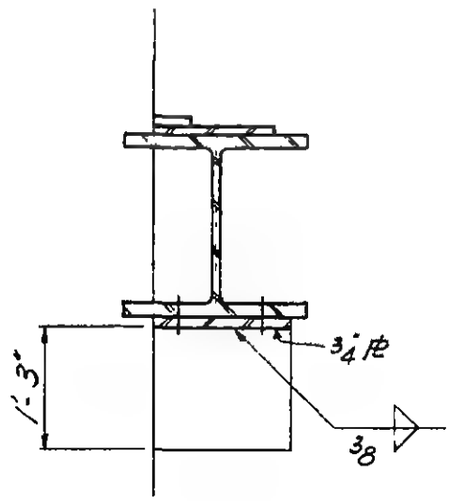

Section b-b

LICENSED PROFESSIONAL ENGINEER — LESLIE E. ROBERTSON — No. 34360 — UNIVERSITY OF THE STATE OF NEW YORK

6-AB1-138

SKILLING - HELLE - CHRISTIANSEN - ROBERTSON Structural & Civil Engineers

PROJECT THE WORLD TRADE CENTER | TITLE CONNECTION DETAIL 332 A | DATE 7-14-67

REVISIONS

-5-67

11-16-67

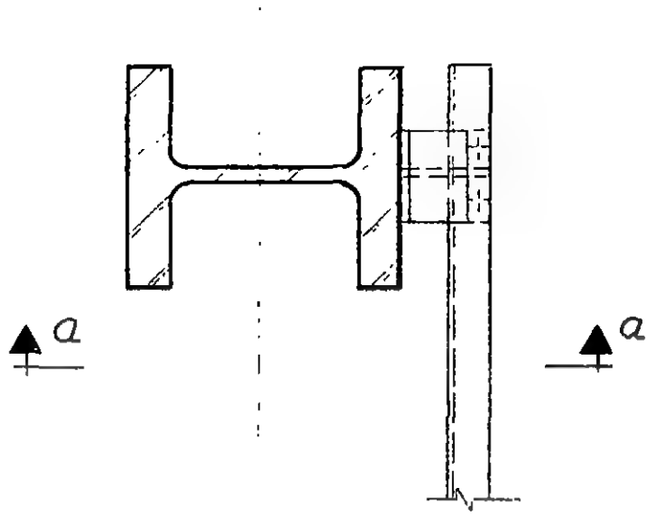

Plan

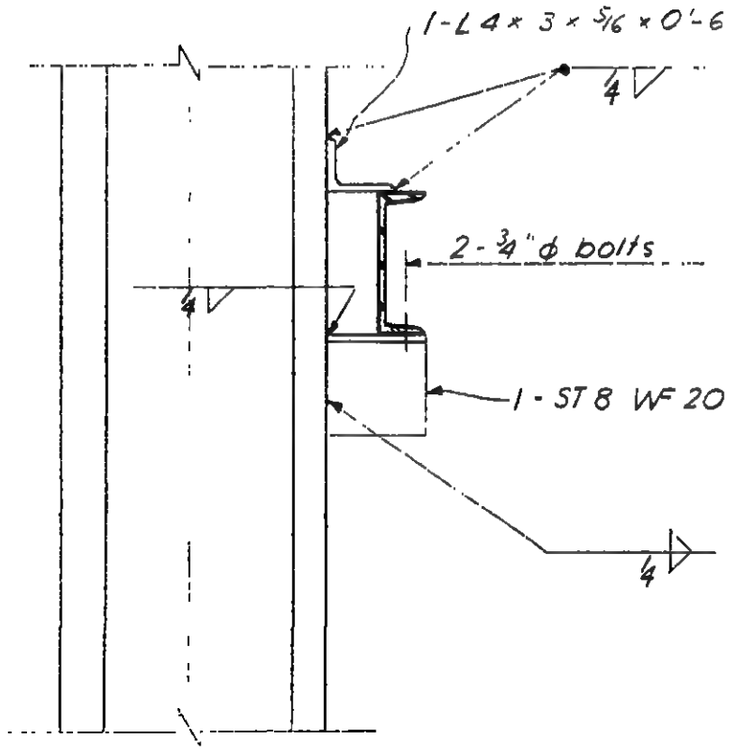

Section a-a

6-ABI-139

WORTHINGTON, SKILLING, HELLE & JACKSON — Civil & Structural Engineers

PROJECT: THE WORLD TRADE CENTER | TITLE: CONNECTION DETAIL 334 A, B, C & D | DATE: 6-5-67

REVISIONS
- 6-30-67
- 7-28-67
- 9-15-67
- 11-10-67
- 5-6-68

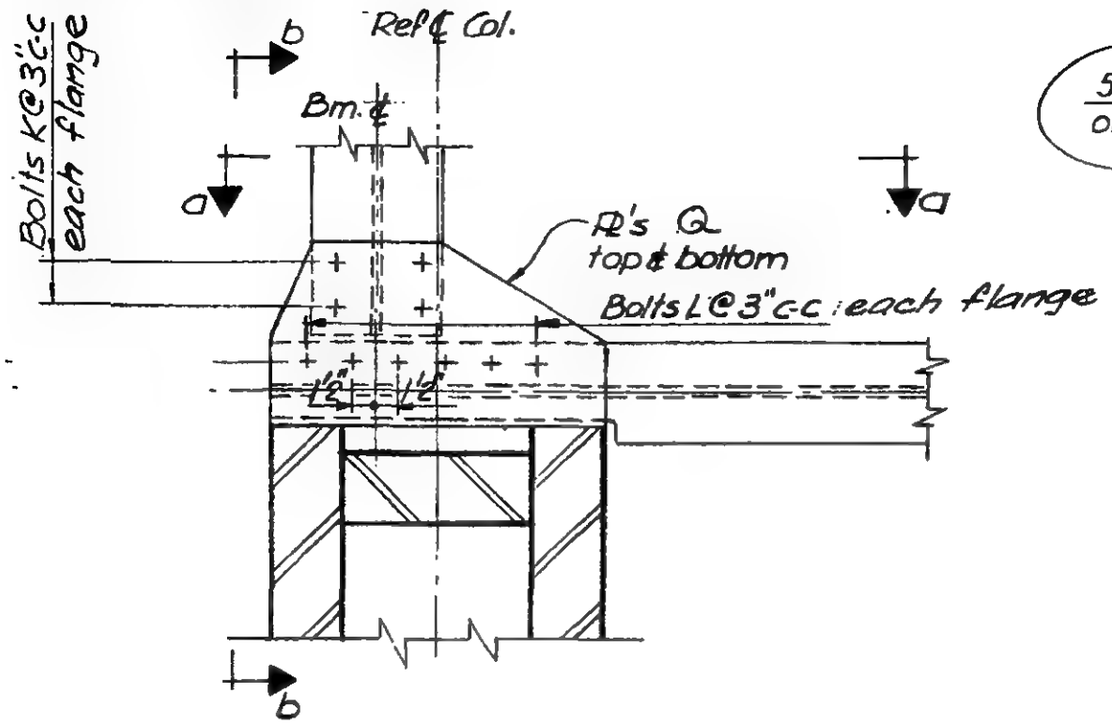

Plan

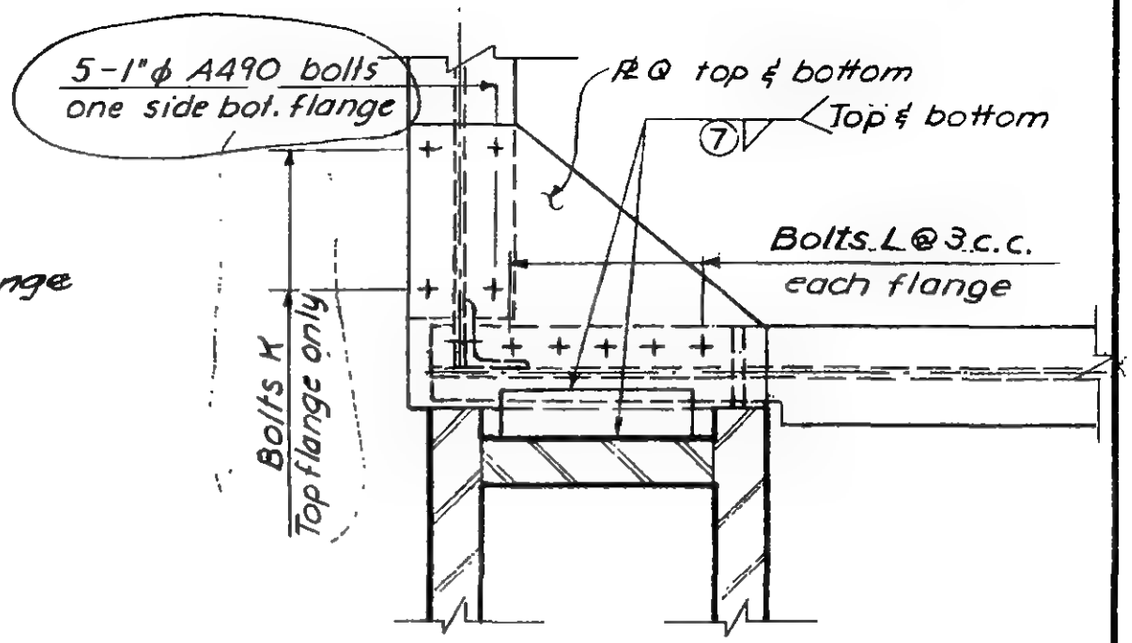

Plan
334 D only

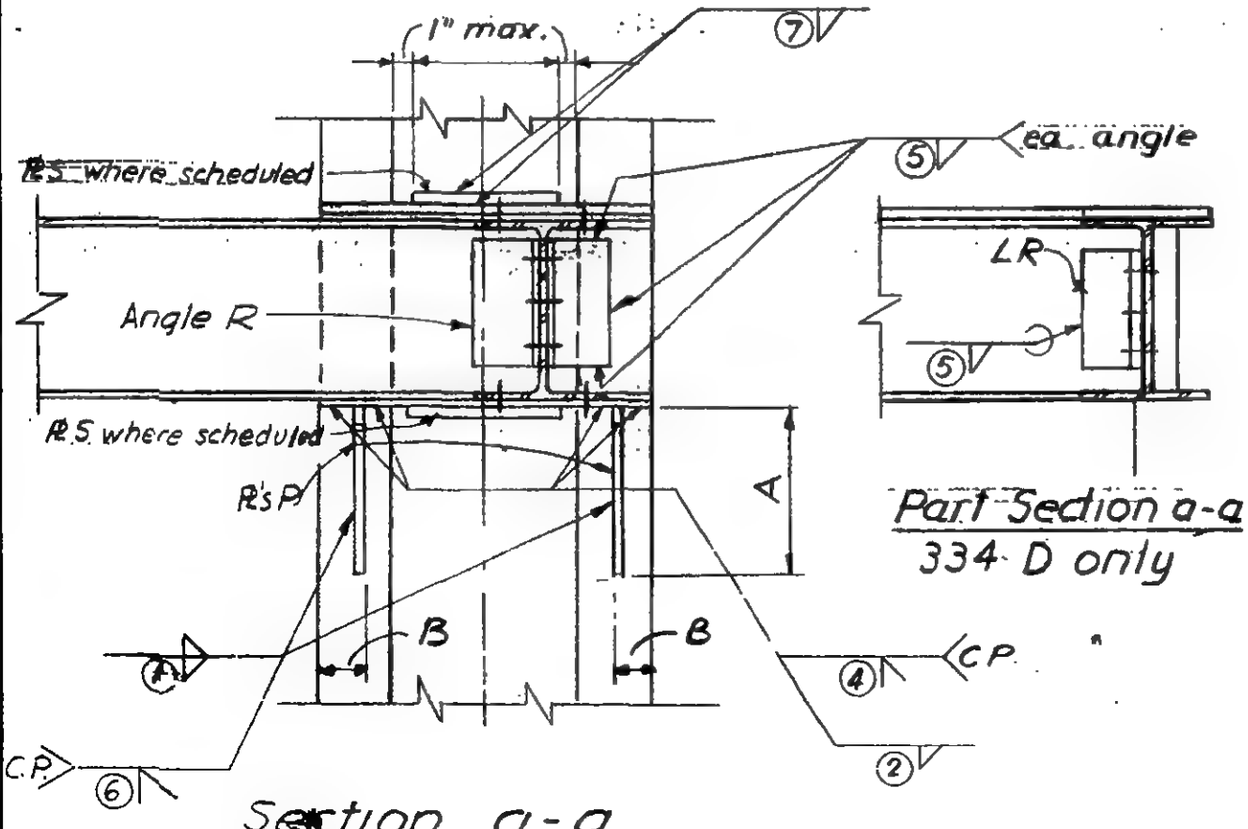

Section a-a

Part Section a-a
334 D only

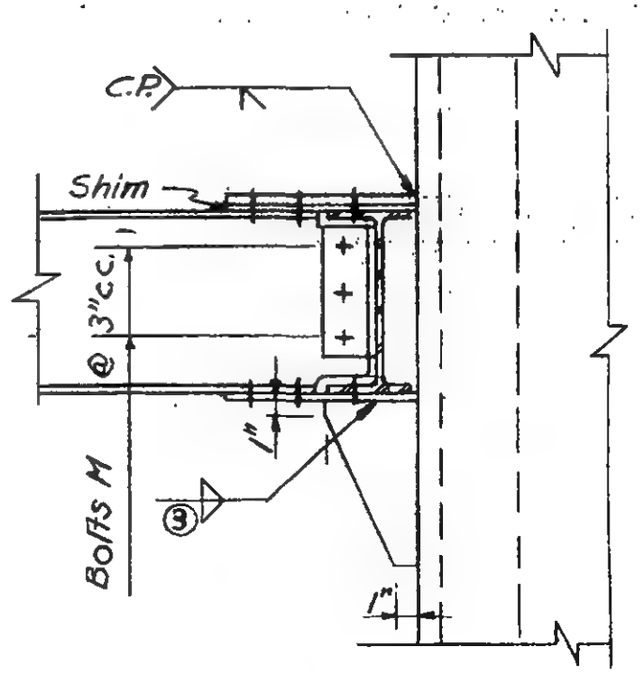

Section b-b

G-AB1-141

LICENSED PROFESSIONAL ENGINEER — LESLIE E. ROBERTSON — No. 34360 — UNIVERSITY OF THE STATE OF NEW YORK

SKILLING - HELLE - CHRISTIANSEN - ROBERTSON Structural & Civil Engineers

PROJECT THE WORLD TRADE CENTER | TITLE SCHEDULE FOR DETAIL 334 A-D | DATE 6-30-67

REVISIONS

7-28-67

9-15-67

11-10-67

	334A	334B	334C	334D		
PLATES						
P	6" x 1/2"	6" x 1/2"	6" x 5/8"	6" x 3/4"		
Q	3/4"	3/4"	3/4"	3/4"		
S	—	—	—	3/8"		
ANGLES						
R	3 1/2 x 3 x 3/8 x 0'-6"	3 1/2 x 3 x 3/8 x 0'-8 1/2	3 1/2 x 3 x 7/16 x 0'-10	4 x 3 x 3/8		
DIMENSIONS						
A	1'-0"	1'-0"	1'-0"	1'-2"		
B	0'-2"	0'-2"	0'-2"	—		
BOLTS						
K	4-1"φ	2-3/4"φ	4-1"φ	8-7/8"φ		
L	6-7/8"φ	6-7/8"φ	6-7/8"φ	5-1 1/8"φ (A490)		
M	2-3/4"φ	2-3/4"φ	3-3/4"φ	8-3/4"φ		
WELDS						
①	1/2	1/2	1/2	—		
②	—	—	—	—		
③	5/16	5/16	1/2	5/16		
④	C.P.	C.P.	C.P.	C.P.		
⑤	5/16	5/16	3/8	5/16		
⑥	—	—	—	C.P.		
⑦	—	—	—	5/16		

6-AB1-141.1

SKILLING - HELLE - CHRISTIANSEN - ROBERTSON Structural & Civil Engineers

PROJECT THE WORLD TRADE CENTER | TITLE CONNECTION DETAIL 334E | DATE 2-9-68

REVISIONS

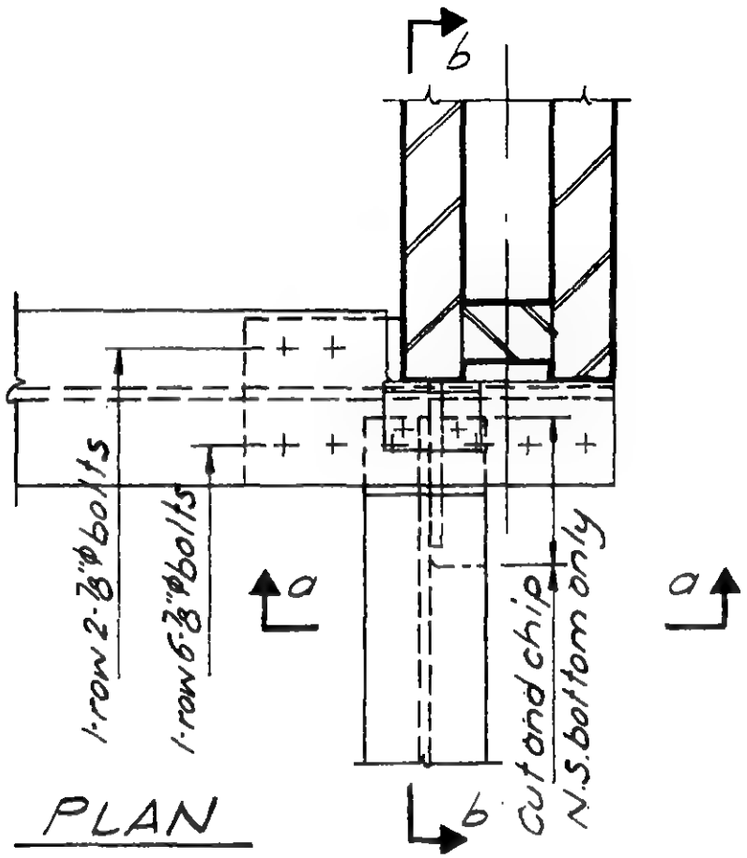

PLAN

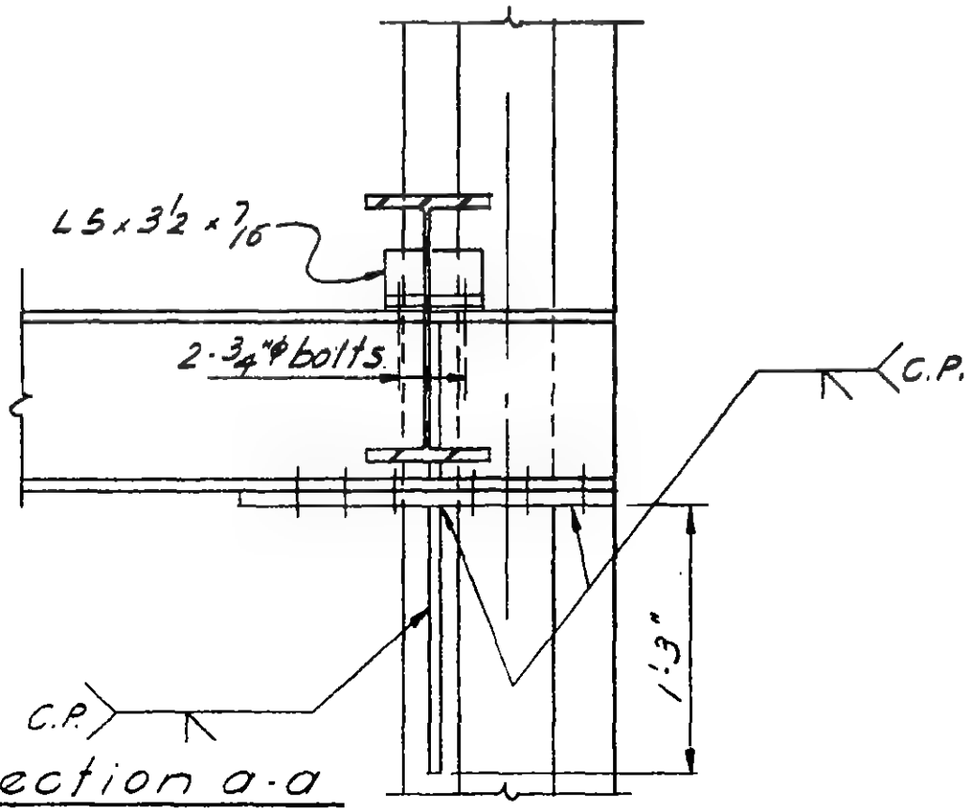

Section a-a

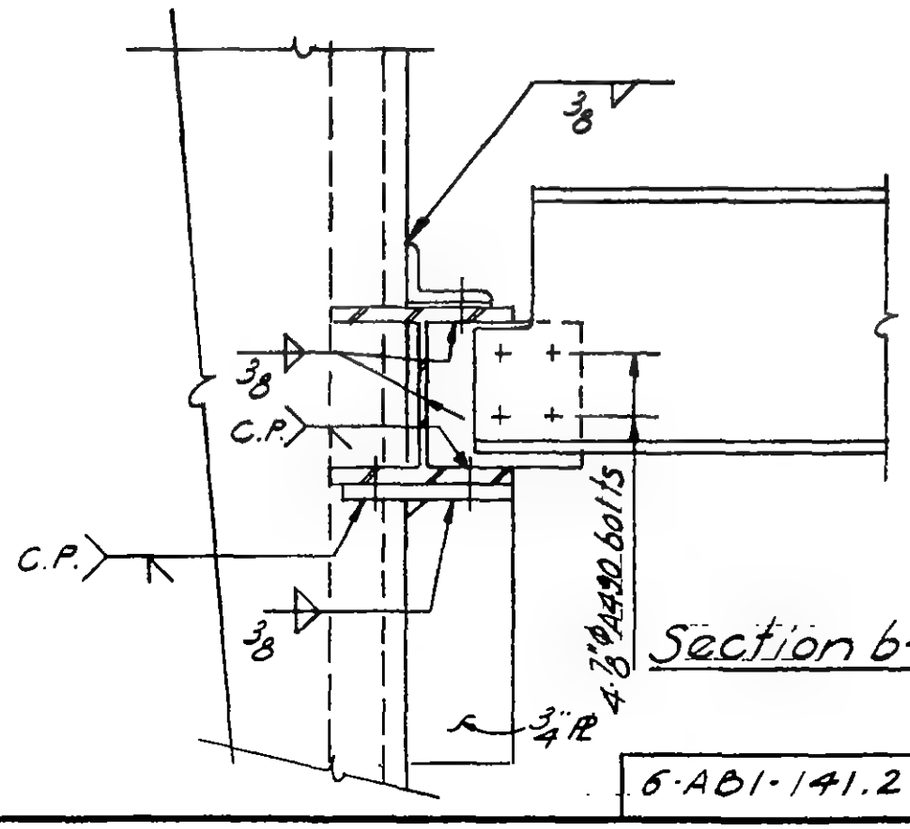

Section b-b

6-AB1-141.2

LICENSED PROFESSIONAL ENGINEER
LESLIE E. ROBERTSON
No. 34360
LICENSED BY THE STATE OF NEW YORK

WORTHINGTON, SKILLING, HELLE & JACKSON — Civil & Structural Engineers

PROJECT THE WORLD TRADE CENTER | TITLE CONNECTION DETAIL 335 A, C, D, E, F, K | DATE 5-1-67

REVISIONS

7-28-67

10-2-67

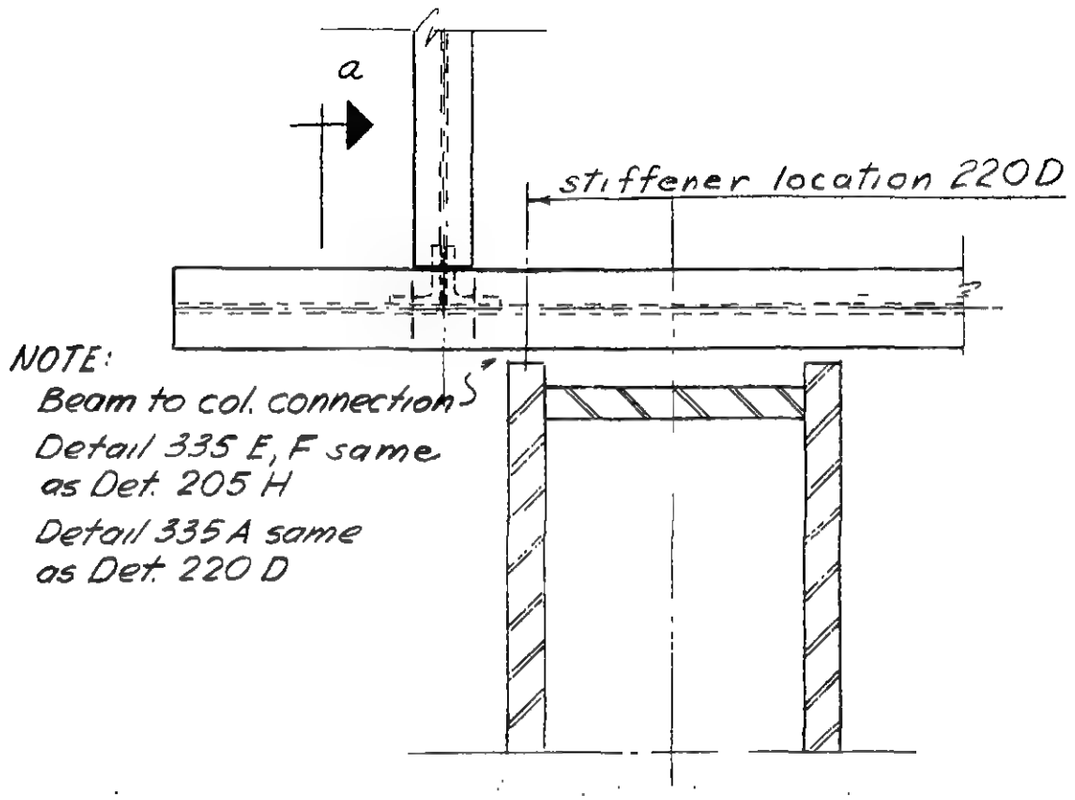

NOTE:
Beam to col. connection S
Detail 335 E, F same as Det. 205 H
Detail 335 A same as Det. 220 D

Plan of detail 335 A, E, F

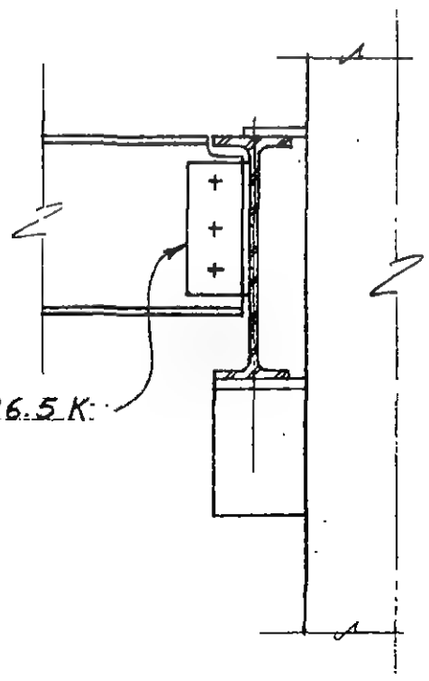

Section a-a

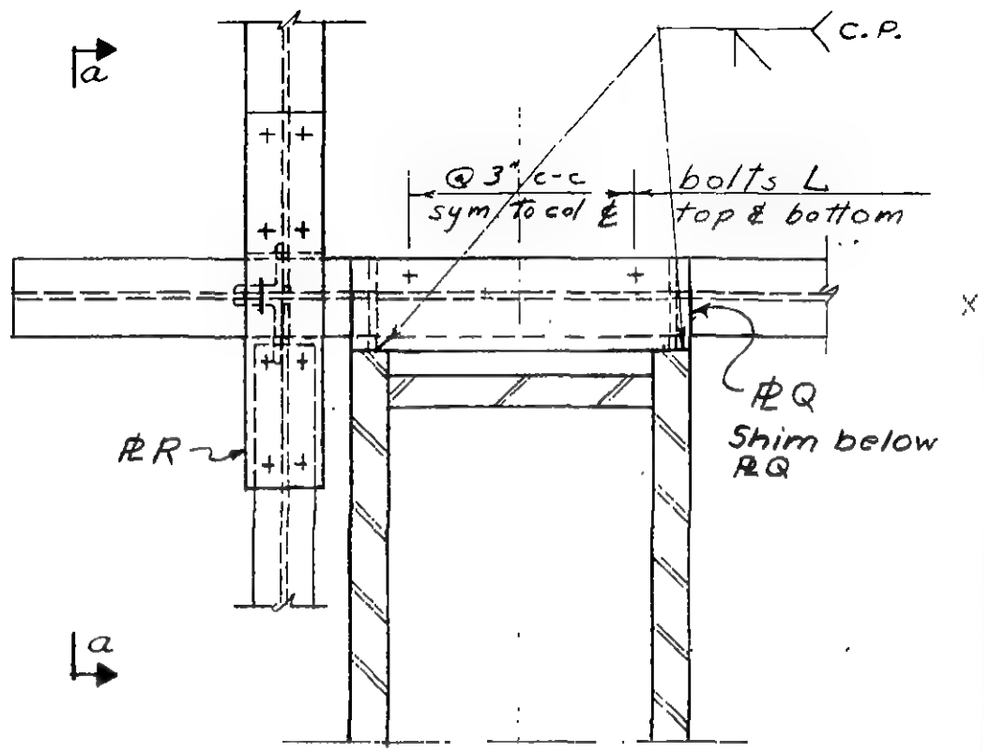

Plan of detail 335 C, D, K

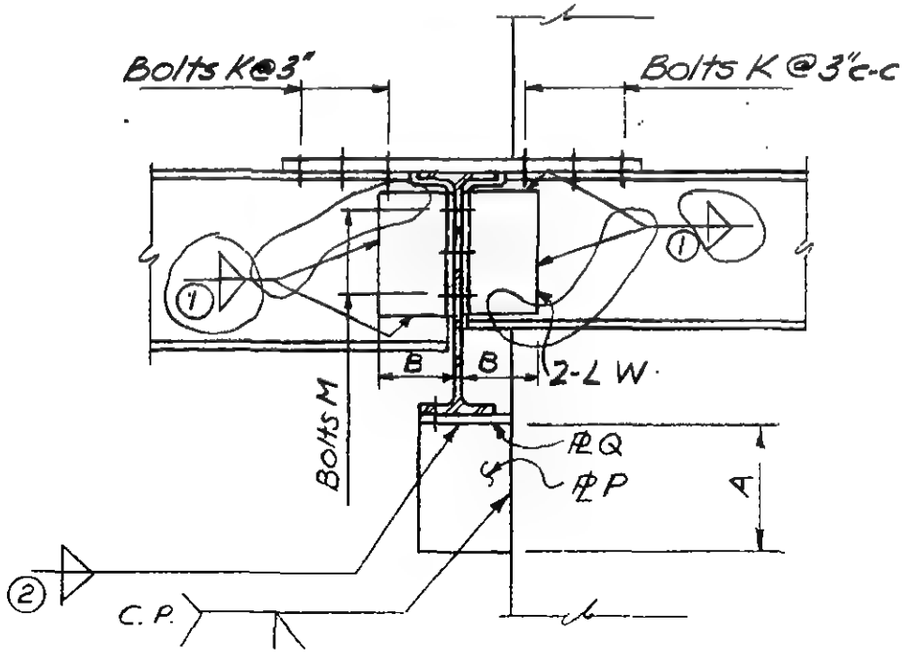

Section a-a

G-AB1-142

LESLIE E. ROBERTSON — REGISTERED PROFESSIONAL ENGINEER — No. 24360 — UNIVERSITY OF THE STATE OF NEW YORK

SKILLING - HELLE - CHRISTIANSEN - ROBERTSON Structural & Civil Engineers

PROJECT THE WORLD TRADE CENTER | TITLE CONNECTION DETAIL 335-B,P | DATE 7-28-67

REVISIONS

8-14-67
9-15-67
10-2-67

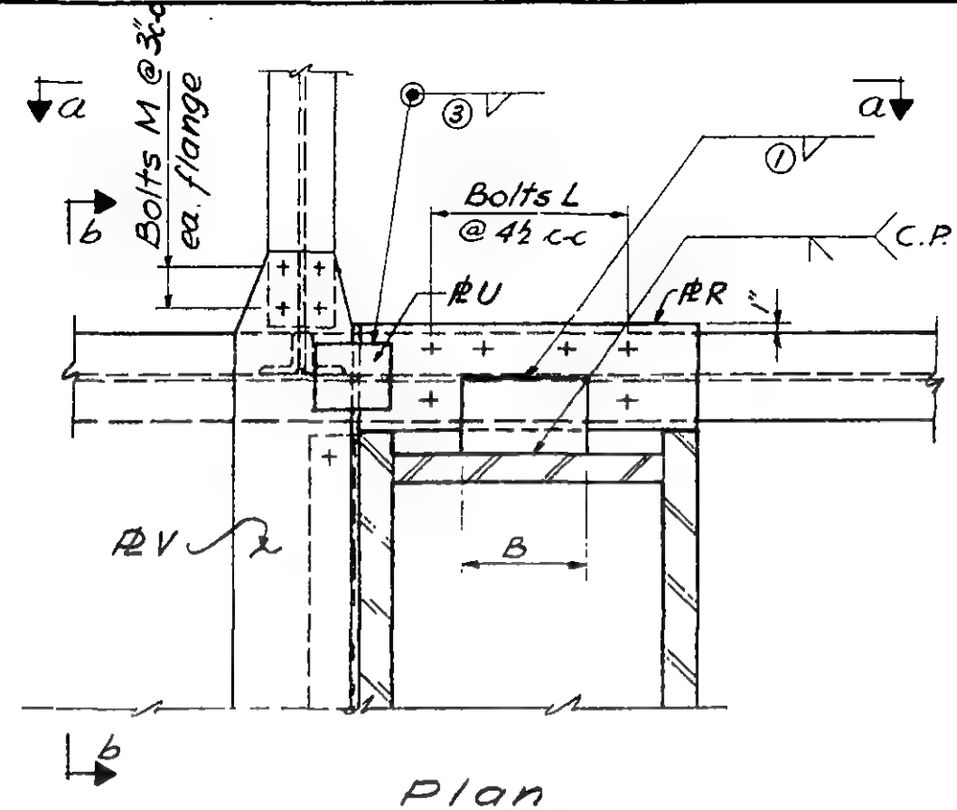

Plan

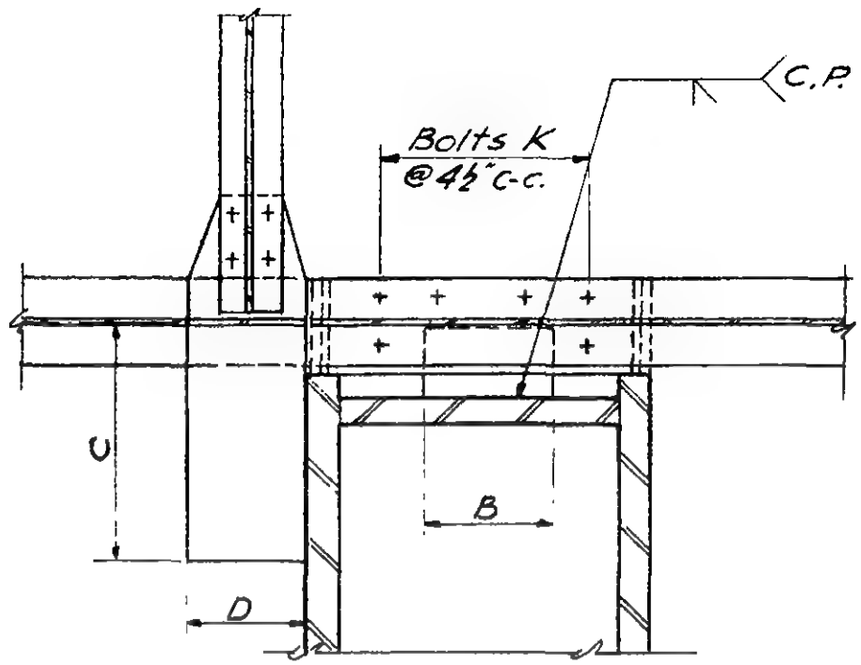

Plan Section c-c

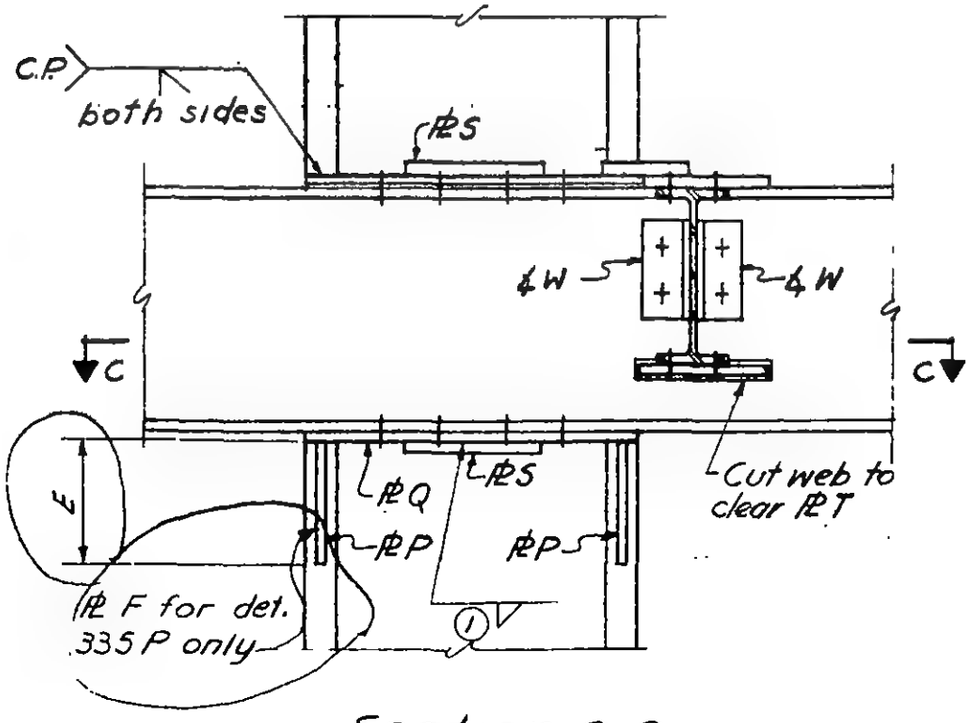

Section a-a

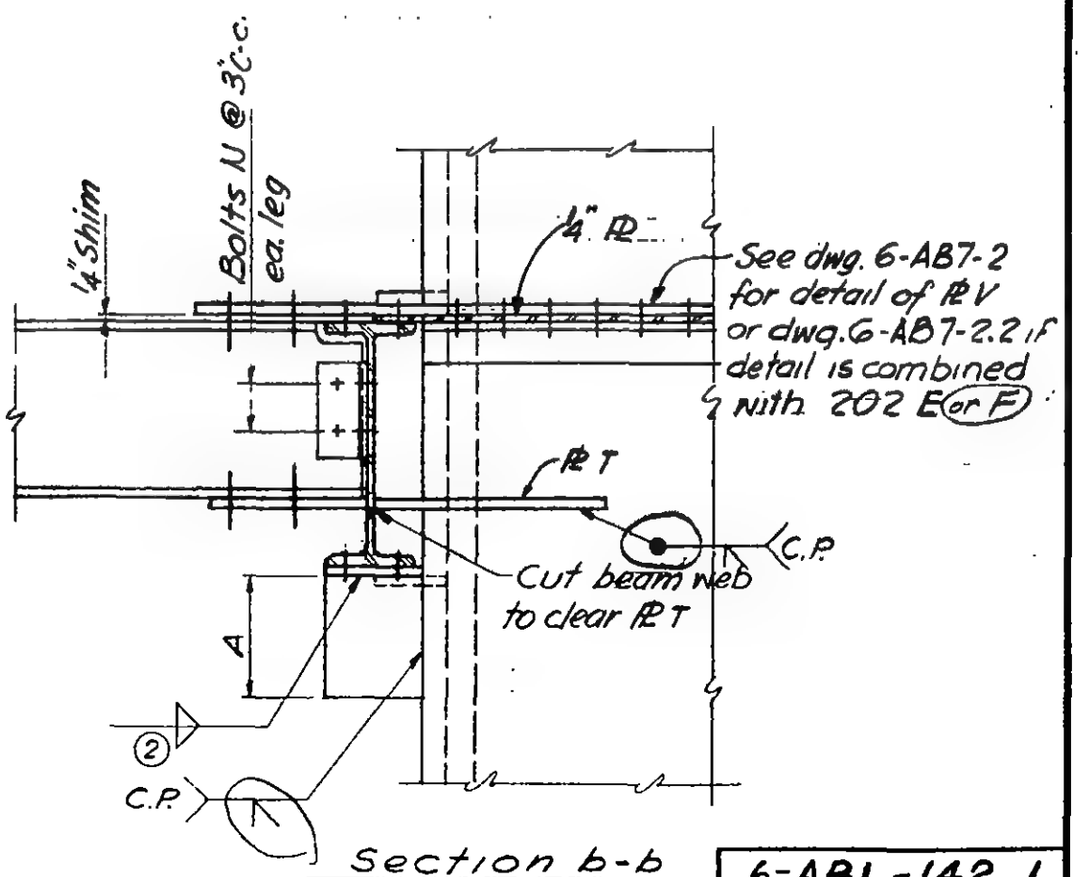

Section b-b

6-AB1-142.1

LICENSED PROFESSIONAL ENGINEER
LESLIE E. ROBERTSON
No. 34360
OF THE STATE OF NEW YORK

SKILLING - HELLE - CHRISTIANSEN - ROBERTSON Structural & Civil Engineers

PROJECT THE WORLD TRADE CENTER | TITLE SCHEDULE FOR DETAIL 335 A,B,C,D,E,F & G | DATE 7-28-67

REVISIONS

8-14-67
9-15-67
10-2-67
10-31-67
11-17-67

REF. DWGS.	G-AB1-142	G-AB1-142.1	G-AB1-142	G-AB1-142	G-AB1-142	G-AB1-142.3
	335A	335B	335C	335D	335E, F	335G
PLATES	See DWG.				See DWG.	
P	G-AB1-142	1/2"	3/8"	5/8"	G-AB1-142	1/2"
Q		3/8"	3/4"	3/4"		5/8"
R		3/4"	5/8"	5/8"		3/4"
S		1/2"	—	—		1/2"
T		3/4"	—	—		3/4"
U		7/8"	—	—		—
V		8 x 3/4"	—	—		3/4"
ANGLE						
W		4 x 3 1/2 x 5/16 x 0'-6"	4 x 3 x 3/8 x 0'-8 1/2"	4 x 3 x 3/8 x 0'-8 1/2"		4 x 3 1/2 x 5/16 x 0'-6"
DIMENSIONS						
A		0'-8"	1'-0"	1'-2"		0'-8"
B		0'-9"	0'-3"	0'-3"		0'-9"
C		1'-6 1/2"	—	—		1'-6 1/2"
D		0'-8"	—	—		0'-8"
BOLTS						
K		6-7/8" Φ	8-3/4" Φ	8-3/4" Φ		6-7/8" Φ
L		6-7/8" Φ	4-1" Φ	4-1" Φ		6-7/8" Φ
M		4-1" Φ (A490)	3-1" Φ	3-1" Φ		4-1" Φ (A490)
N		2-3/4" Φ	—	—		2-3/4" Φ
WELDS						
①		7/16"	4"	4"		7/16"
②		5/16"	5/16"	5/16"		5/16"
③		1/2"	—	—		—
④		5/16"	—	—		5/16"

LICENSED PROFESSIONAL ENGINEER
LESLIE E. ROBERTSON
No. 34360
UNIVERSITY OF THE STATE OF NEW YORK

6-AB1-142.2

SKILLING - HELLE - CHRISTIANSEN - ROBERTSON Structural & Civil Engineers

PROJECT THE WORLD TRADE CENTER | TITLE CONNECTION DETAIL 335 G | DATE 8-14-67

REVISIONS

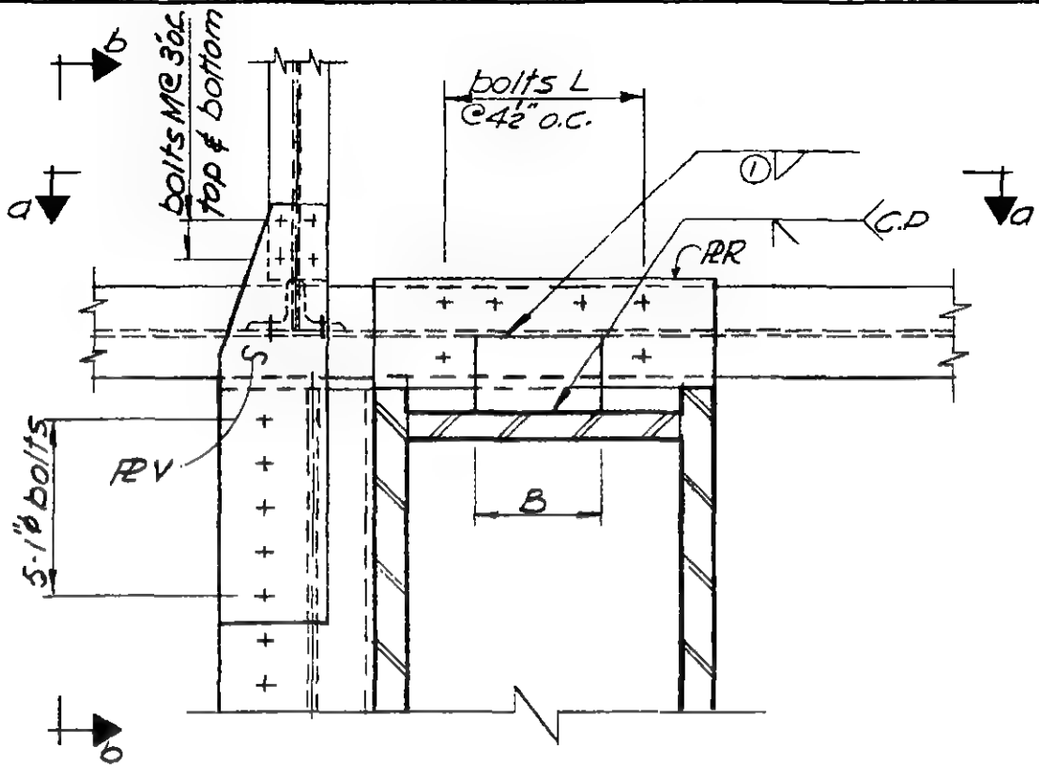

Plan

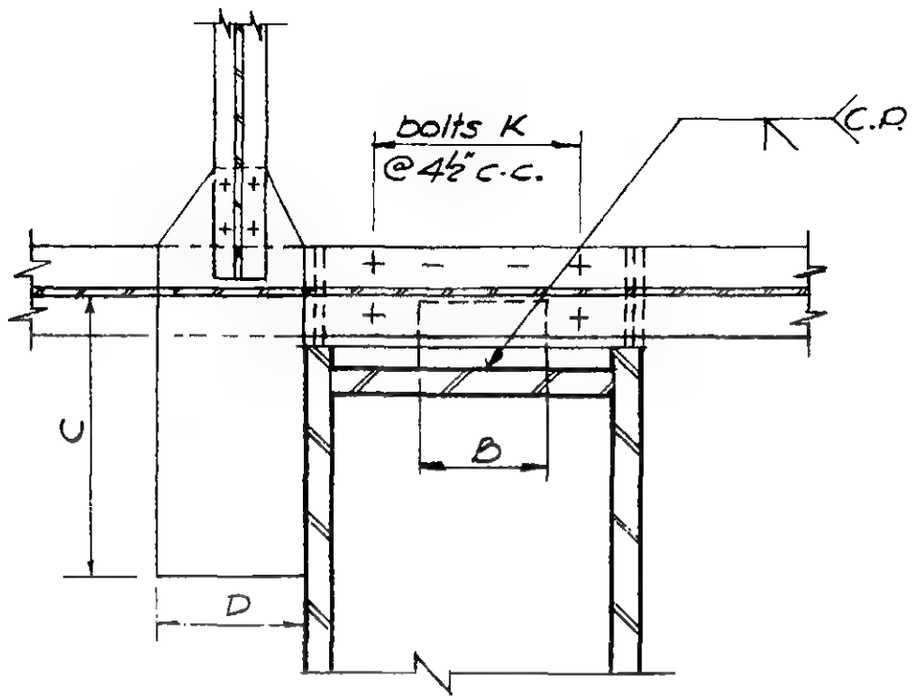

Plan Section C-C

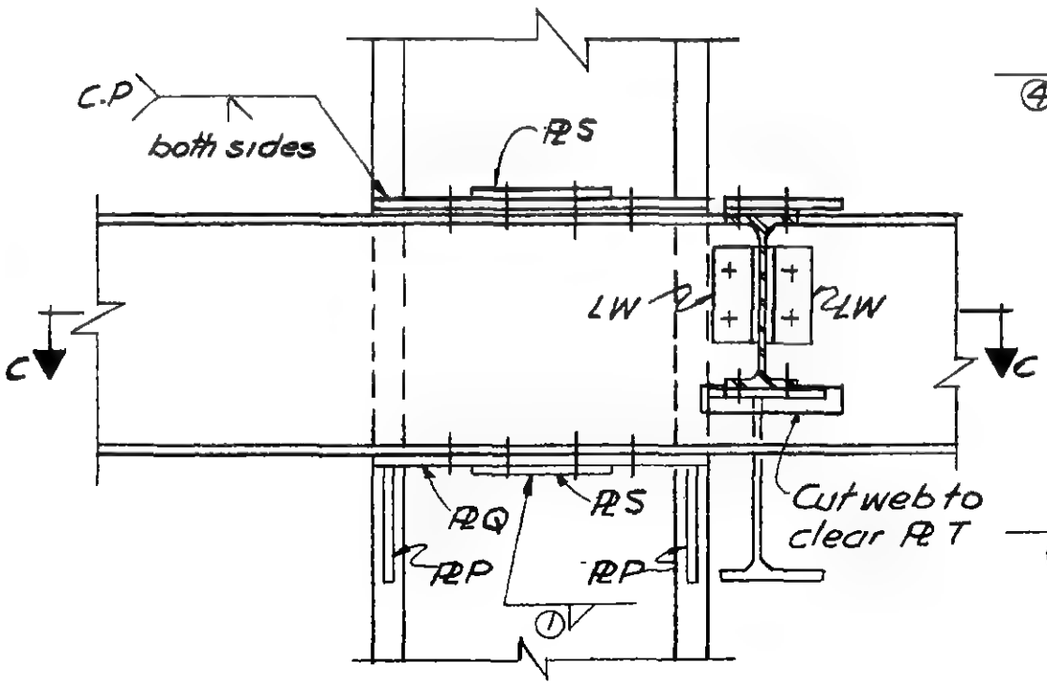

Section a-a

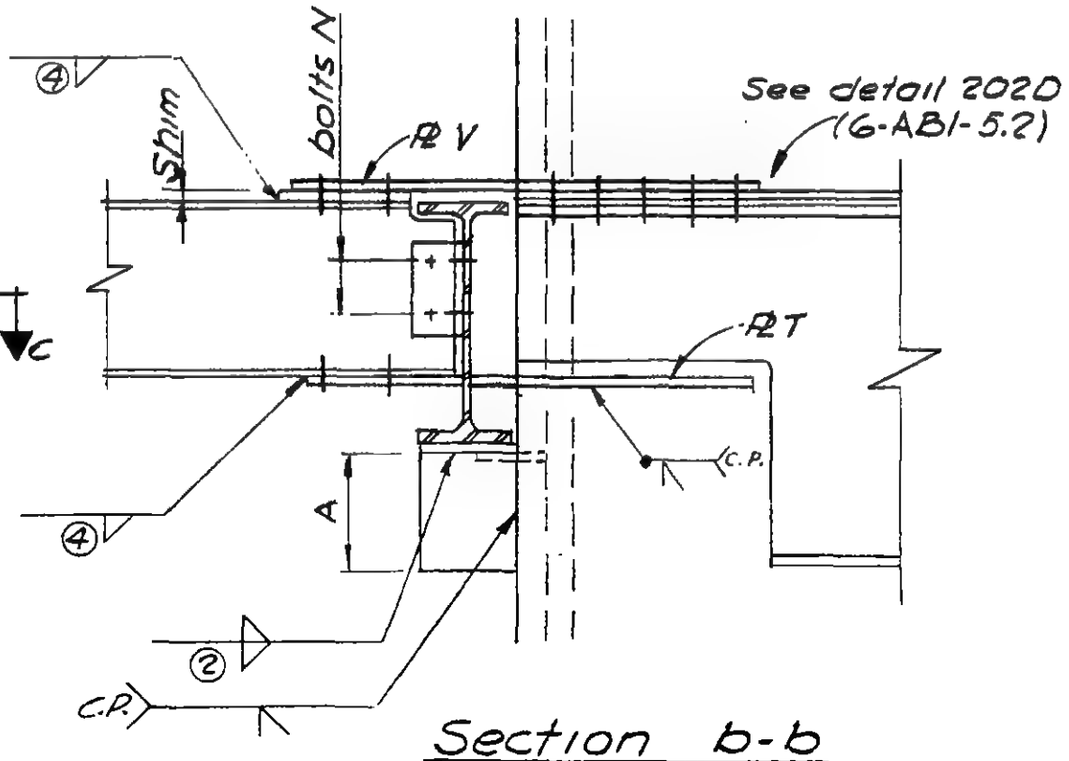

Section b-b

G-AB1-142.3

LICENSED PROFESSIONAL ENGINEER
LESLIE E. ROBERTSON
No. 34360
UNIVERSITY OF THE STATE OF NEW YORK

SKILLING - HELLE - CHRISTIANSEN - ROBERTSON Structural & Civil Engineers

PROJECT THE WORLD TRADE CENTER | TITLE CONNECTION DETAIL 335 H | DATE 9-15-67

REVISIONS

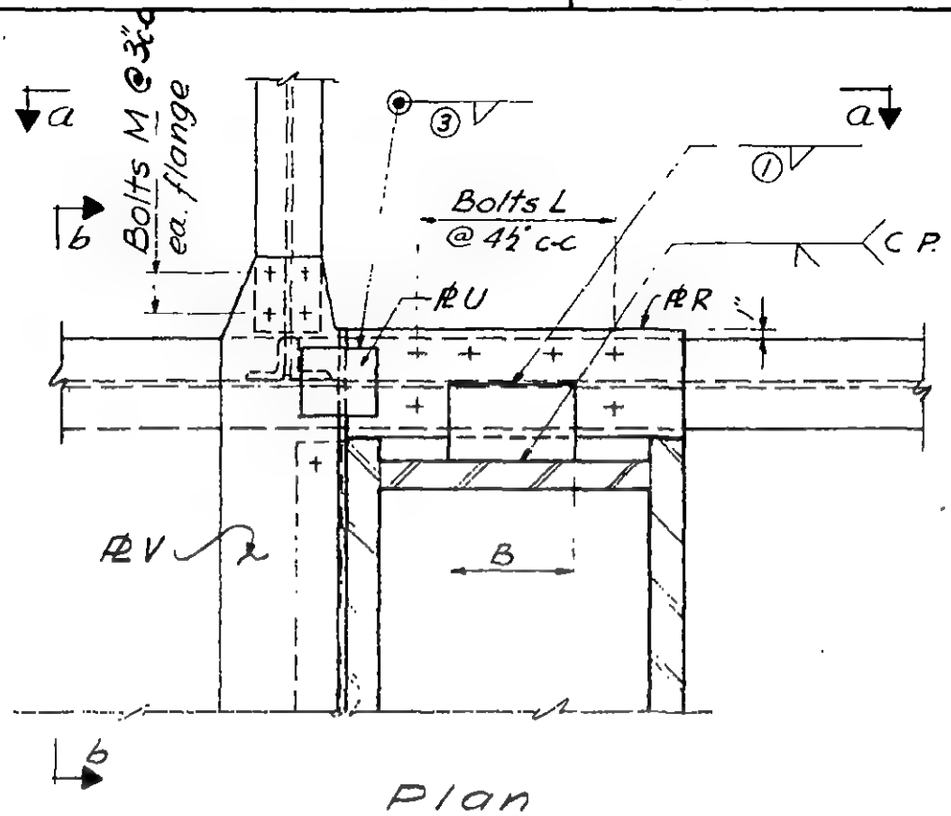

Plan

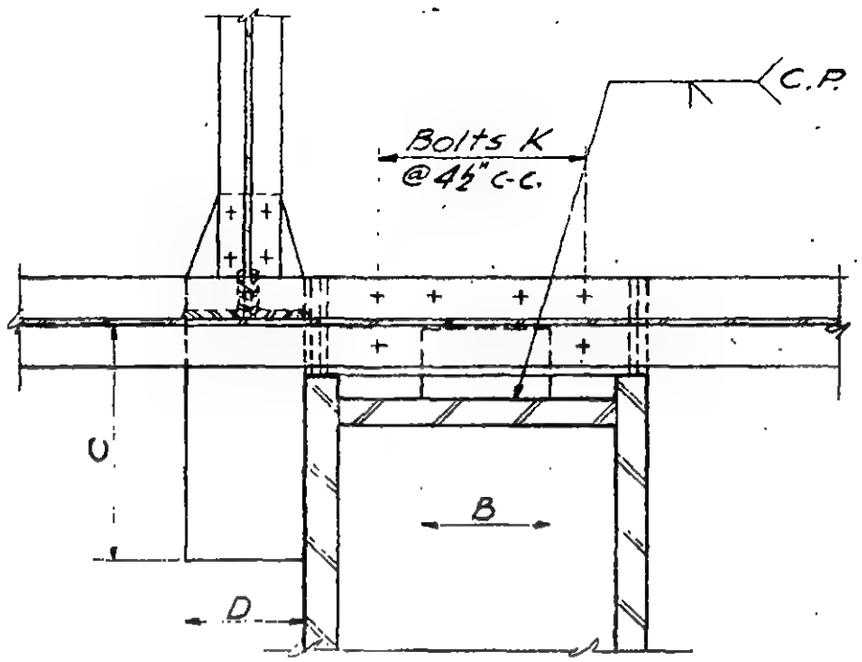

Plan Section c-c

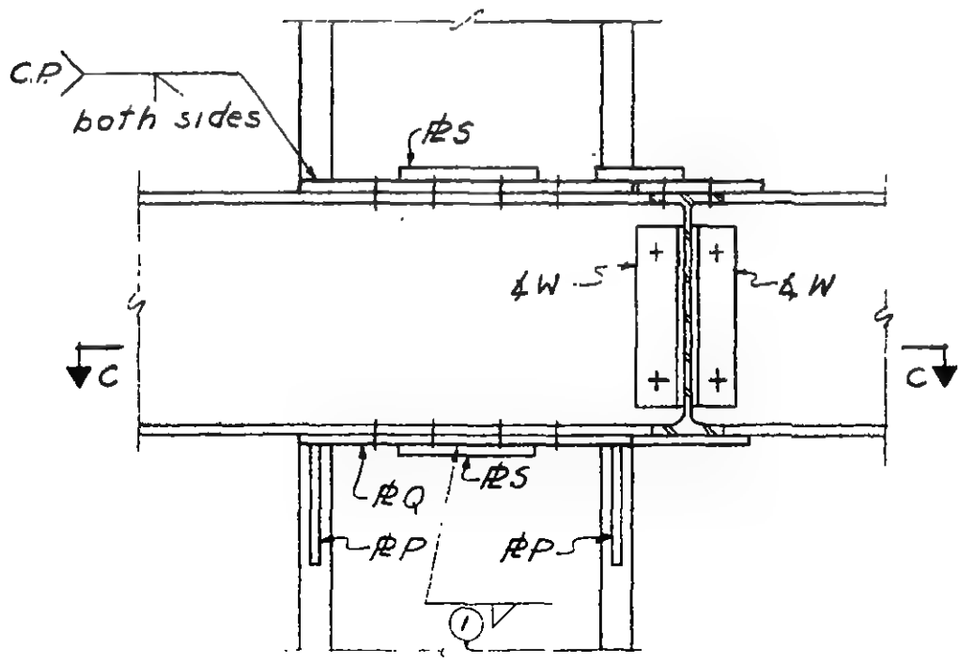

Section a-a

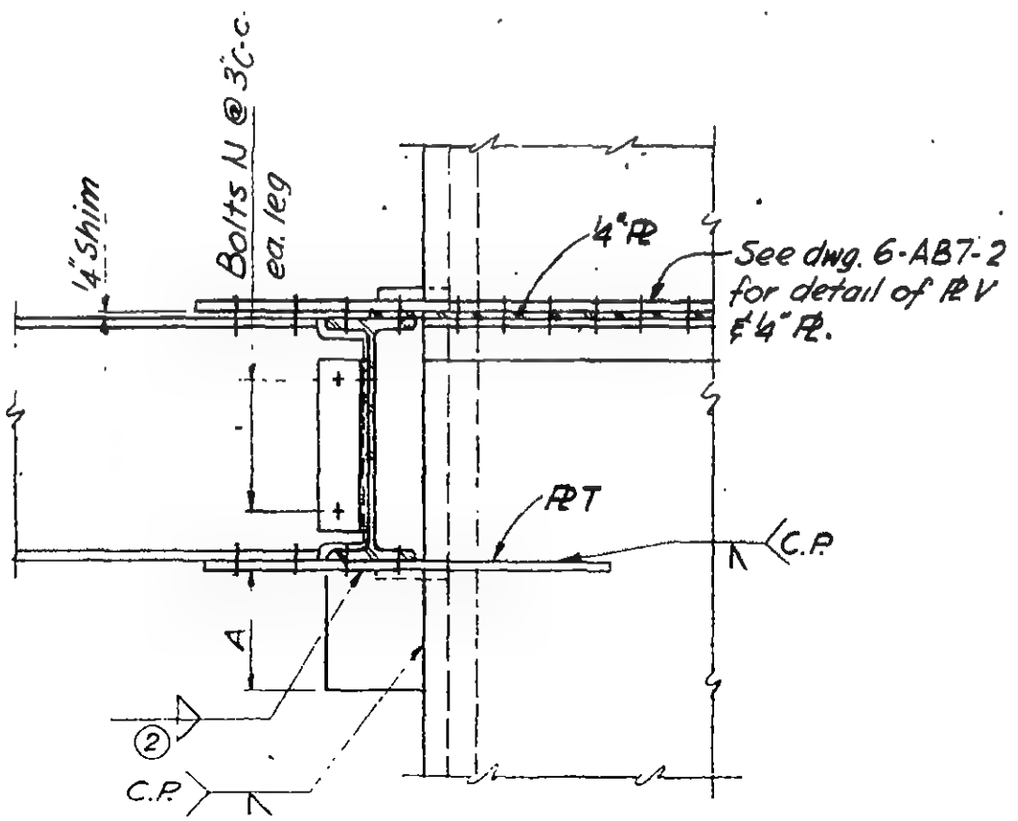

Section b-b

6-AB1.-142.4

LICENSED PROFESSIONAL ENGINEER
LESLIE E. ROBERTSON
No. 34360
UNIVERSITY OF THE STATE OF NEW YORK

SKILLING - HELLE - CHRISTIANSEN - ROBERTSON Structural & Civil Engineers

PROJECT THE WORLD TRADE CENTER | TITLE CONNECTION DETAIL 335 I | DATE 9-15-67

REVISIONS

11-10-67

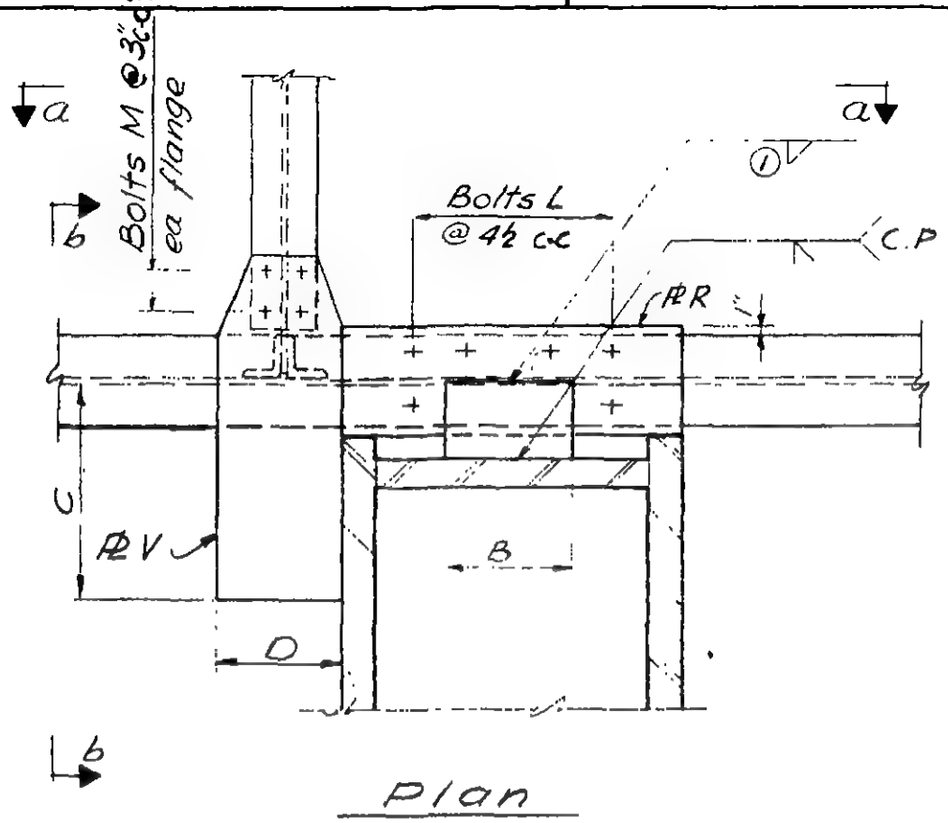

Plan

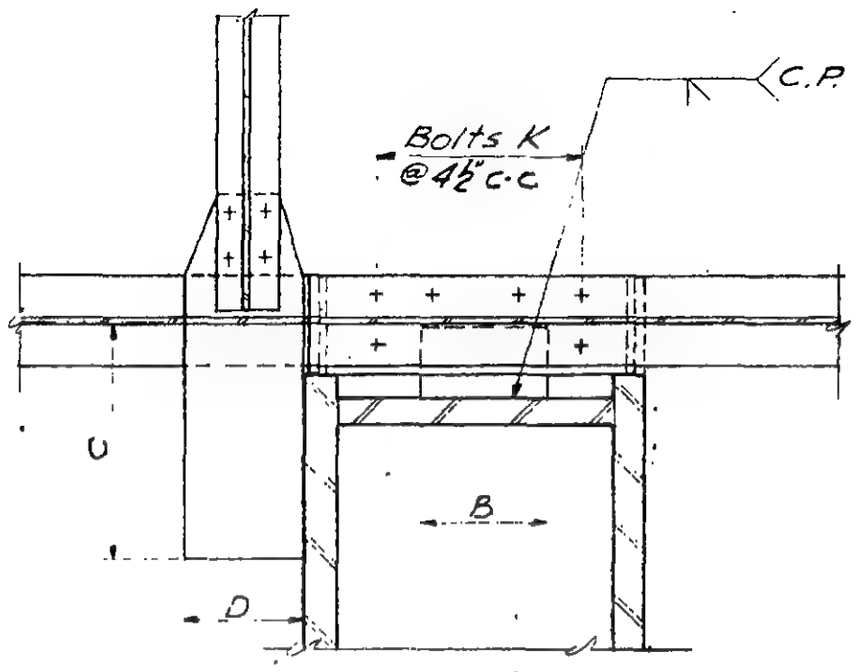

Plan Section c-c

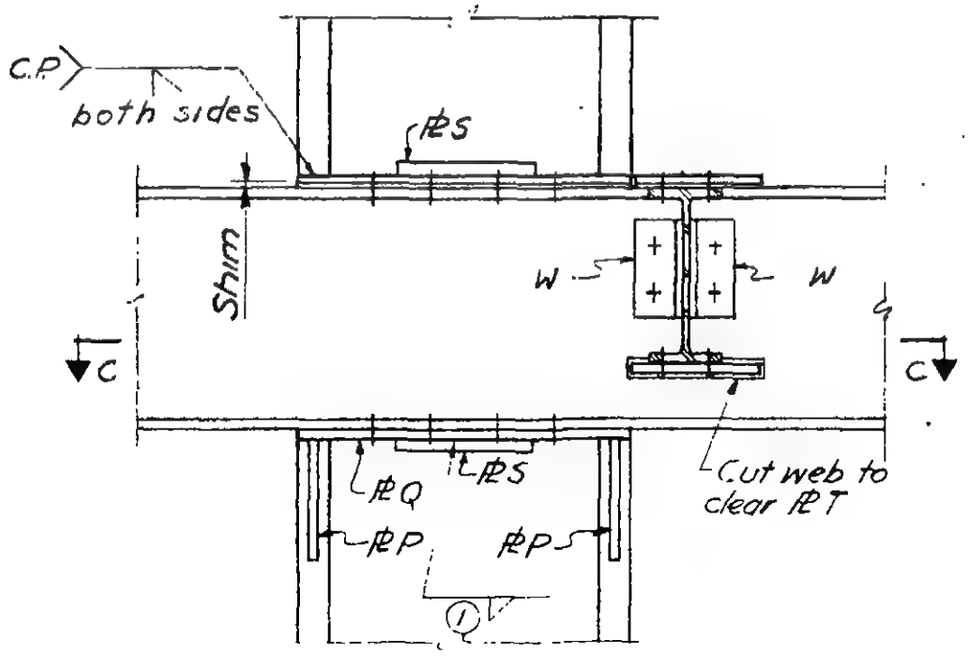

Section a-a

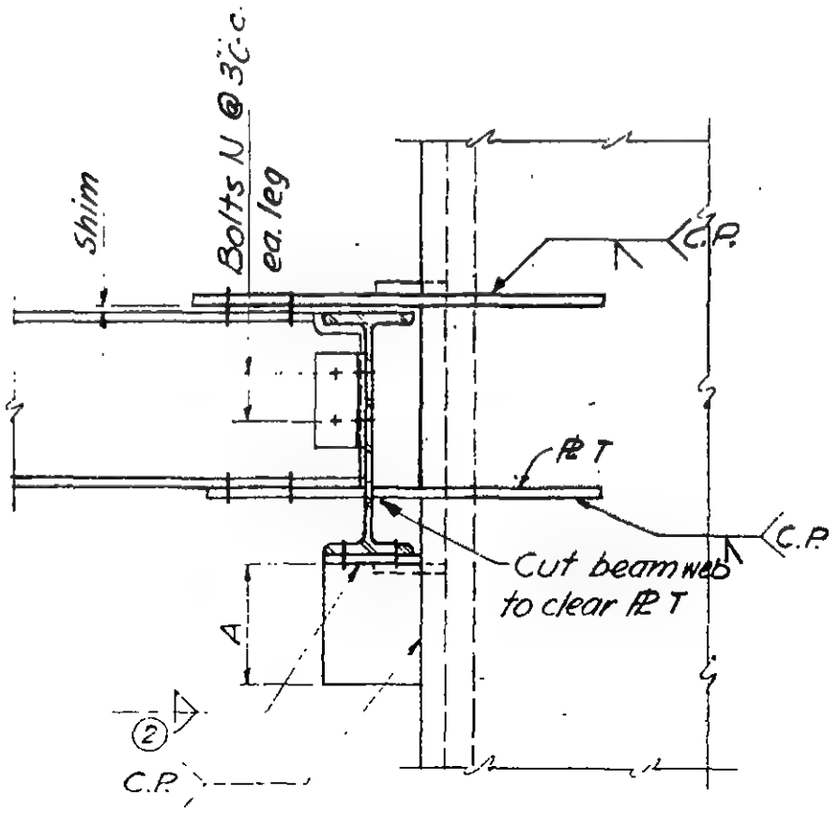

Section b-b

6-ABI-142.5

LICENSED PROFESSIONAL ENGINEER
LESLIE E. ROBERTSON
No. 34360
UNIVERSITY OF THE STATE OF NEW YORK

SKILLING - HELLE - CHRISTIANSEN - ROBERTSON Structural & Civil Engineers

PROJECT THE WORLD TRADE CENTER | TITLE CONNECTION DETAIL 335 J | DATE 9-15-67

REVISIONS

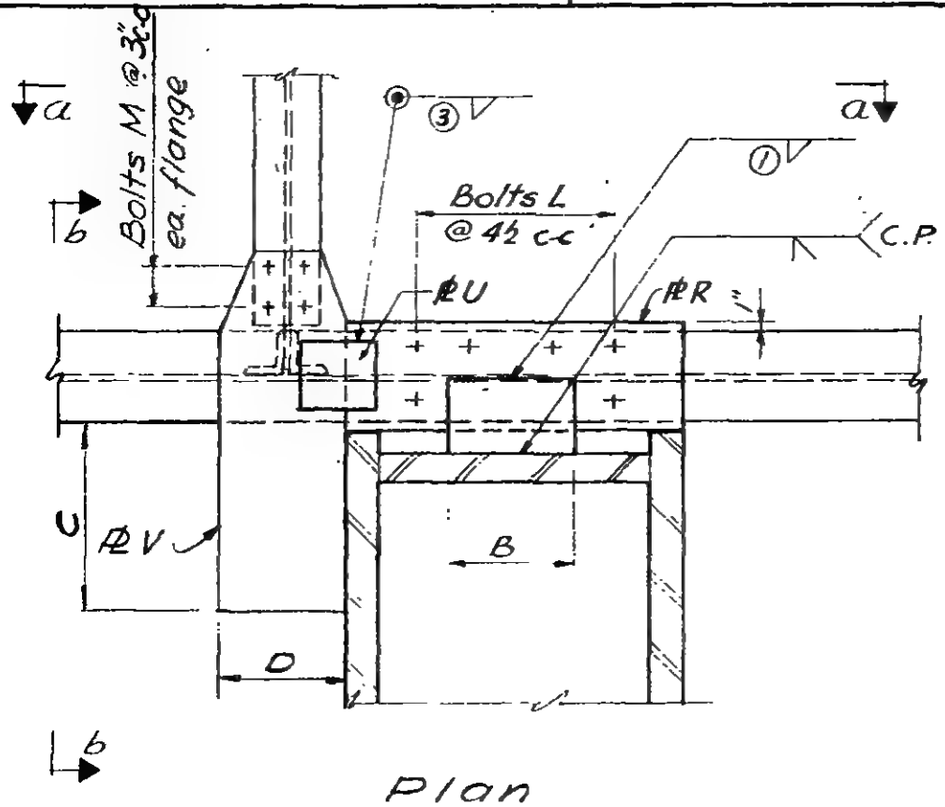

Plan

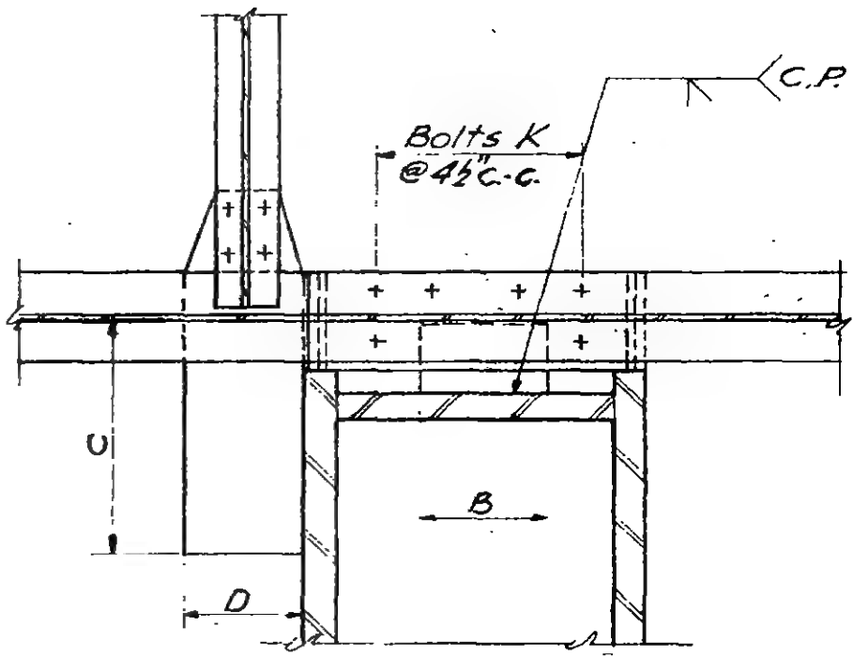

Plan Section c-c

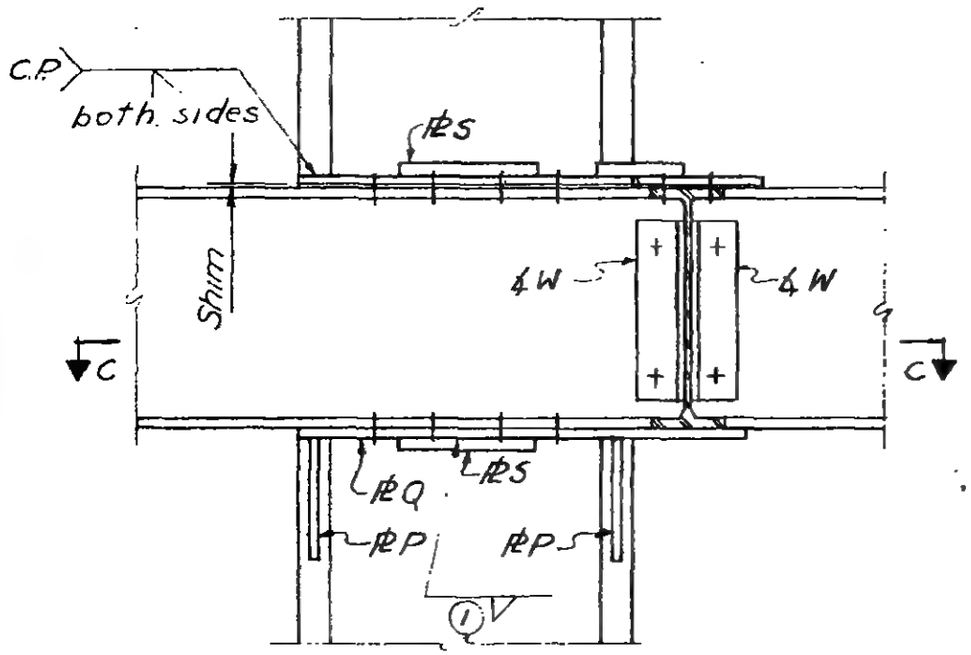

Section a-a

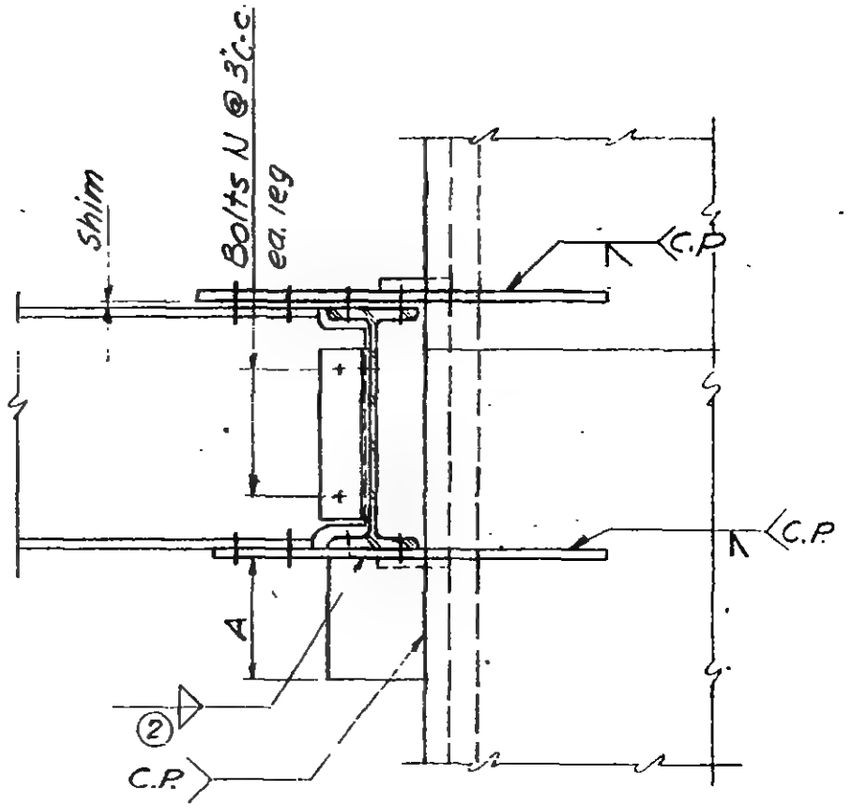

Section b-b

6-ABI-142.6

LICENSED PROFESSIONAL ENGINEER
LESLIE E. ROBERTSON
No. 34360
UNIVERSITY OF THE STATE OF NEW YORK

SKILLING - HELLE - CHRISTIANSEN - ROBERTSON Structural & Civil Engineers

PROJECT THE WORLD TRADE CENTER | TITLE SCHEDULE FOR DETAIL 335.H,I,J,K,L,P | DATE 9-15-67

REVISIONS
10-2-67
11-10-67

REF. DWG.	6-AB1-142.4	6-AB1-142.5	6-AB1-142.6	6-AB1-142	6-AB1-142.8	6-AB1-142.1
	335 H	335 I	335 J	335 K	335 L	335 P
PLATES F	—	—	—	—	—	3/4
P	1/2"	1/2"	1/2"	5/8"	1"	1/2
Q	1/2"	1/2"	1/2"	5/8"	1"	3/8
R	3/4"	3/4"	3/4"	1/2"	1"	3/4
S	1/2"	1/2"	1/2"	—	3/4"	1/2
T	3/8"	3/8"	3/8"	—	—	3/4
U	7/8"	—	7/8"	—	—	7/8
V	3/4"	3/4"	3/4"	—	—	8 x 3/4
ANGLES						
W	4 x 3 1/2 x 5/16 x 1'-0"	4 x 3 1/2 x 5/16 x 0'-6"	4 x 3 1/2 x 5/16 x 1'-0"	5 x 4 x 3/8 x 0'-9"	—	4 x 3 1/2 x 5/16 x 0'-6
DIMENSIONS						
A	0'-8"	0'-8"	0'-8"	1'-0"	1'-10"	0'-8"
B	0'-9"	0'-9"	0'-9"	0'-5"	—	0'-9"
C	1'-6 1/2"	1'-6 1/2"	1'-6 1/2"	—	—	1'-6 1/2"
D	0'-8"	0'-8"	0'-8"	—	—	0'-8"
E	—	—	—	—	—	1'-2"
BOLTS						
K	6 - 7/8" ϕ	6 - 7/8" ϕ	6 - 7/8" ϕ	6 - 3/4" ϕ	4 - 7/8" ϕ	6 - 7/8" ϕ
L	6 - 7/8" ϕ	6 - 7/8" ϕ	6 - 7/8" ϕ	4 - 3/4" ϕ	8-1 1/8" ϕ (A490)	6 - 7/8" ϕ
M	8 - 3/4" ϕ (A490)	8-3/4" ϕ (A490)	8-3/4" ϕ (A490)	3 - 7/8" ϕ	—	4-1" ϕ (A490)
N	4 - 3/4" ϕ	4 - 3/4" ϕ	4 - 3/4" ϕ	—	—	2 - 3/4" ϕ
WELDS						
1	7/16	7/16	7/16	5/16	3/8	7/16
2	5/16	5/16	5/16	5/16	5/8	5/16
3	1/2	—	1/2	—	—	1/2
4	—	—	—	—	—	5/16

6-AB1-142.7

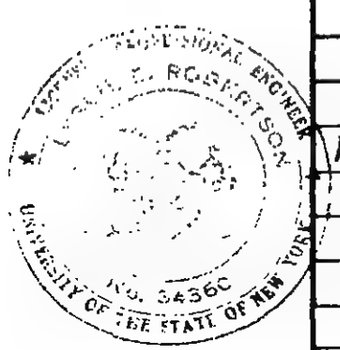

SKILLING - HELLE - CHRISTIANSEN - ROBERTSON Structural & Civil Engineers

PROJECT THE WORLD TRADE CENTER | TITLE CONNECTION DETAIL 335L | DATE 10-2-67

REVISIONS

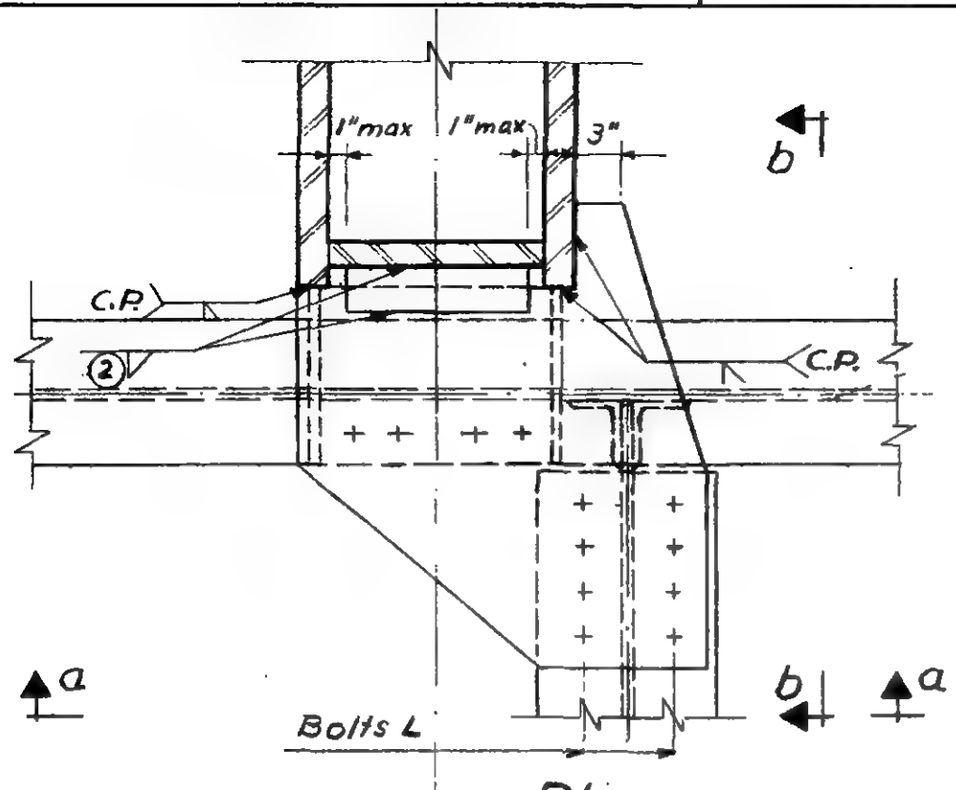

Plan

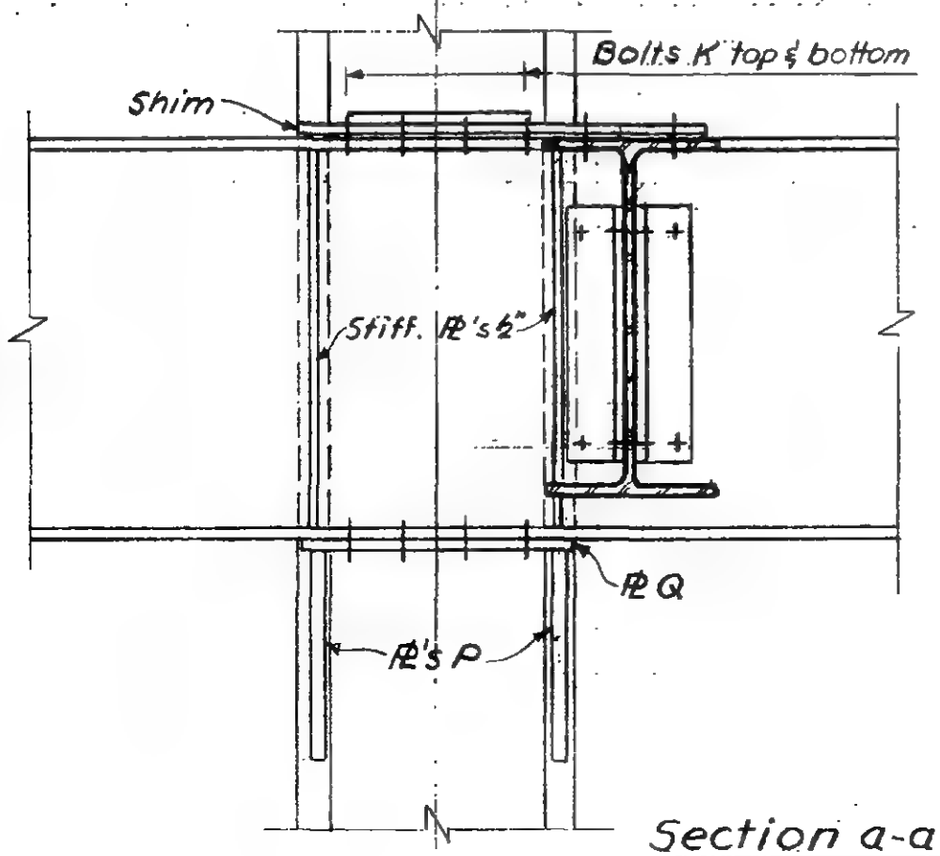

Section a-a

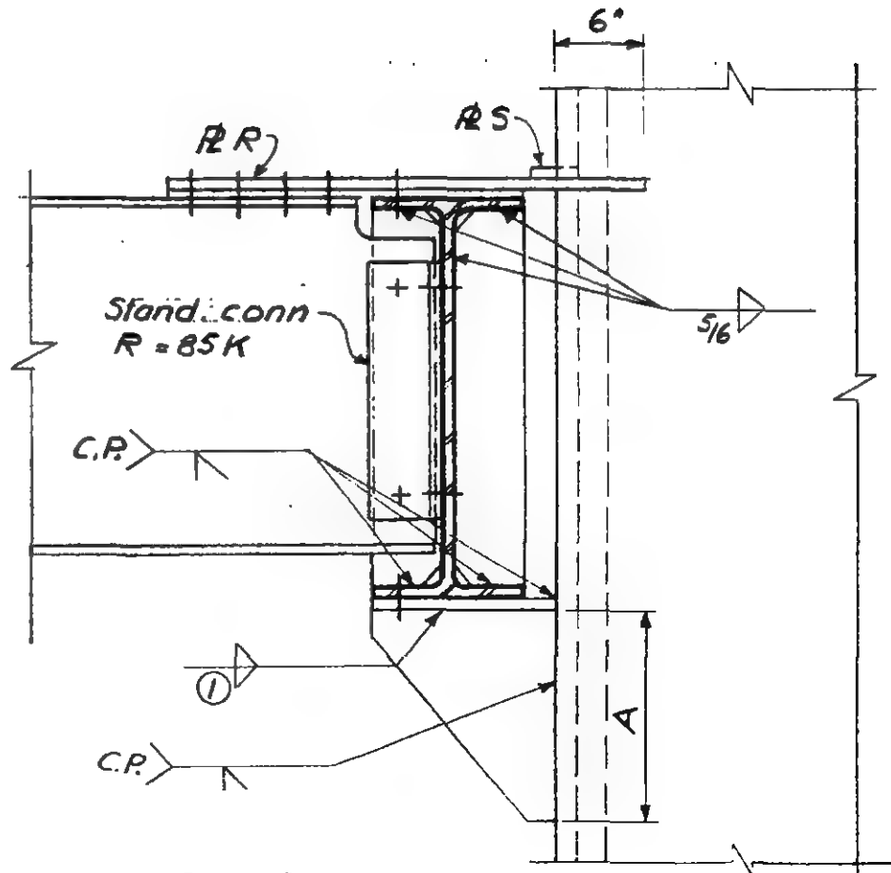

Section b-b

LICENSED PROFESSIONAL ENGINEER
LESLIE E. ROBERTSON
No. 34360
UNIVERSITY OF THE STATE OF NEW YORK

6-AB1-142.8

SKILLING - HELLE - CHRISTIANSEN - ROBERTSON Structural & Civil Engineers

PROJECT THE WORLD TRADE CENTER | TITLE CONNECTION DETAIL 335 M | DATE 12-21-67

REVISIONS

7-17-68

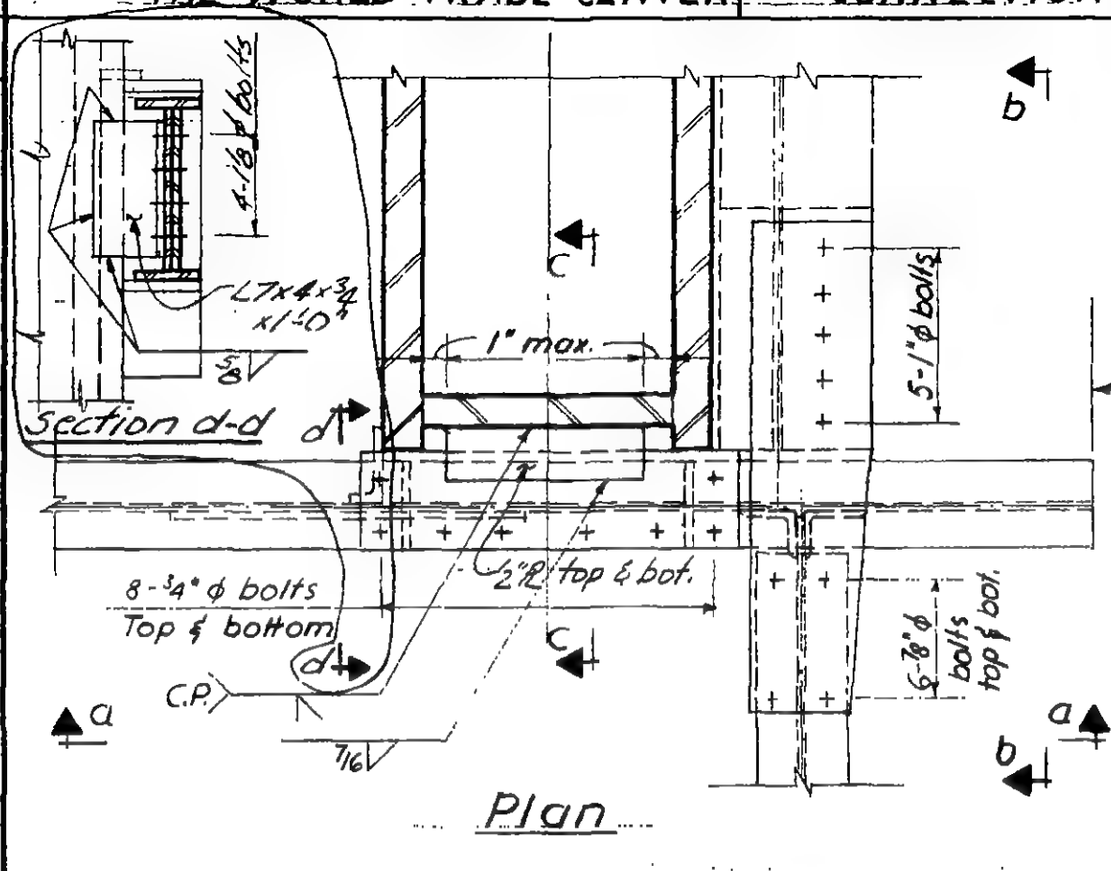

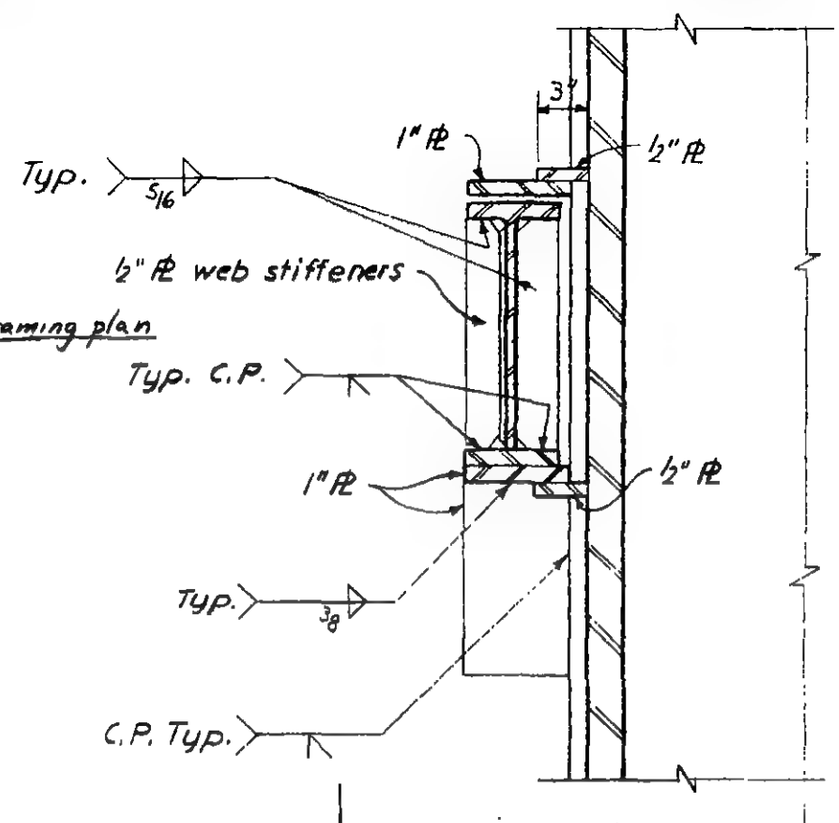

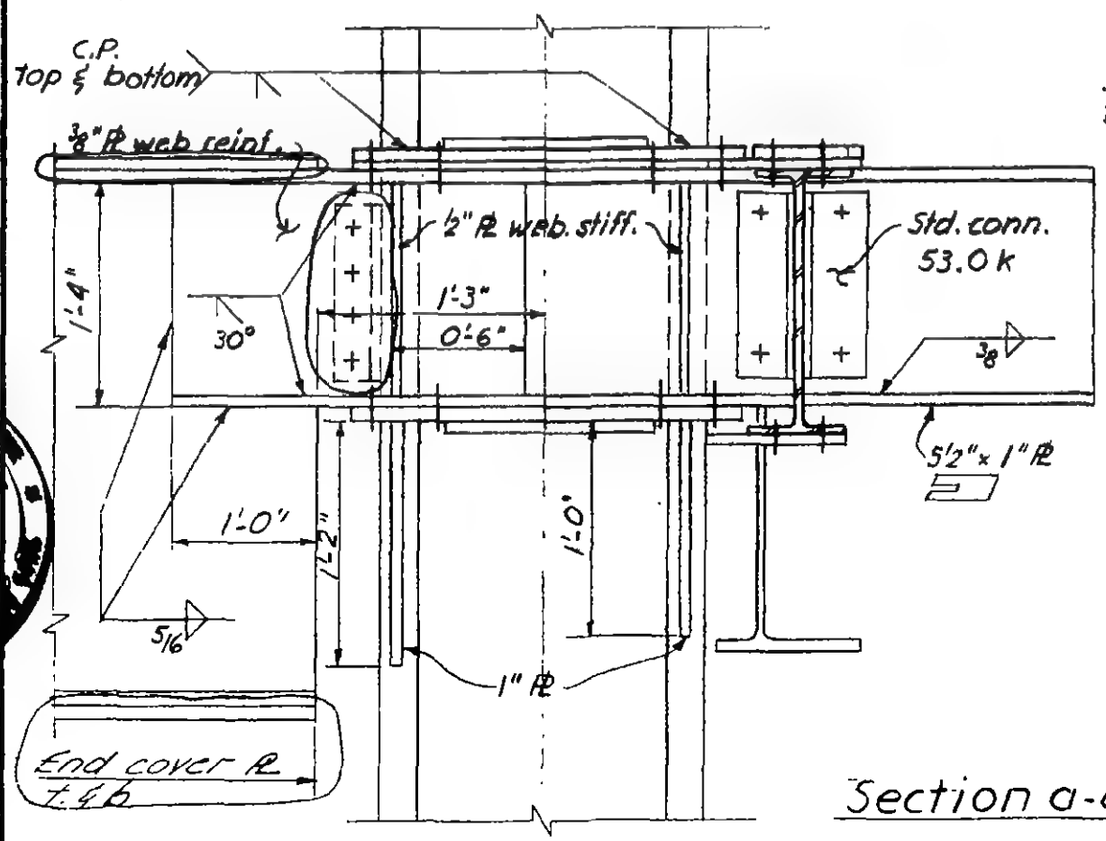

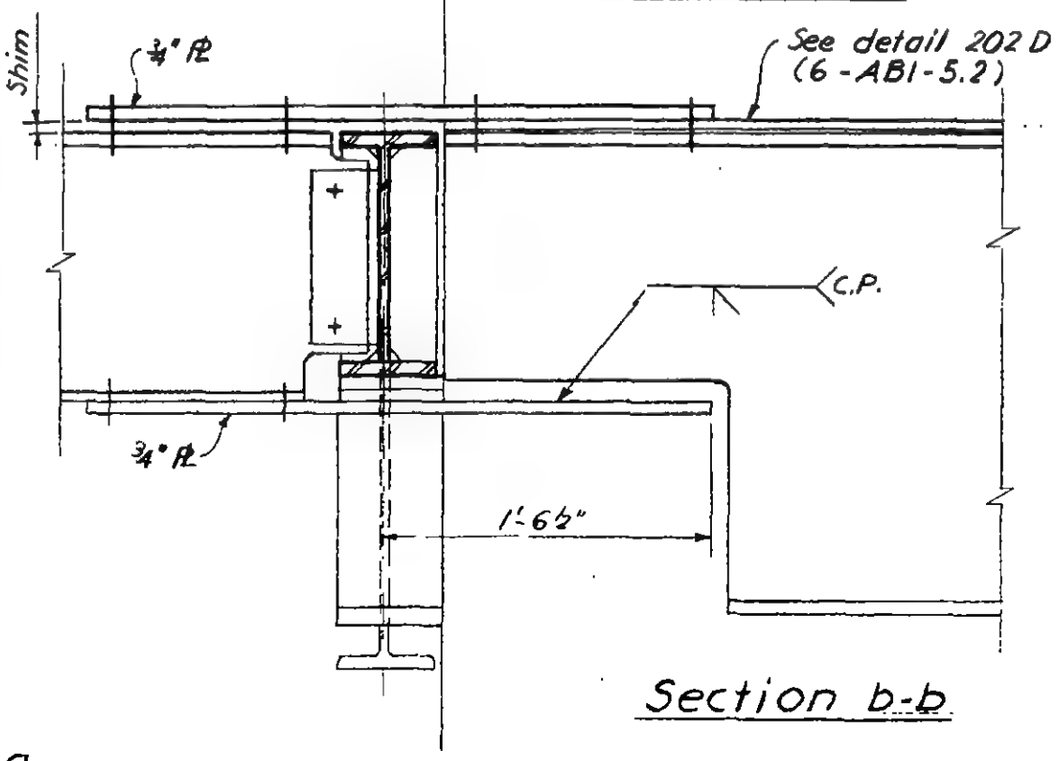

6-ABI-142.9

SKILLING - HELLE - CHRISTIANSEN - ROBERTSON Structural & Civil Engineers

PROJECT THE WORLD TRADE CENTER | TITLE CONNECTION DETAIL 335N | DATE 4-17-68

REVISIONS

Wherever suitable reuse previously scheduled (Details 335K and 235D) plates and bolts.

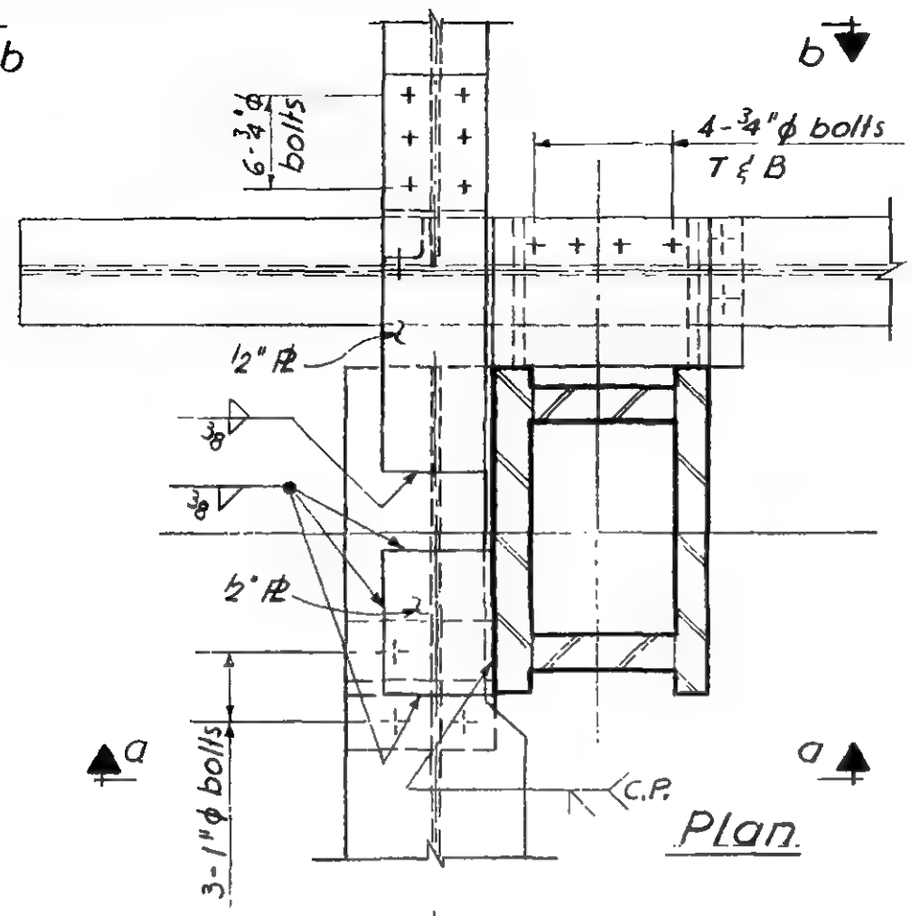

Plan

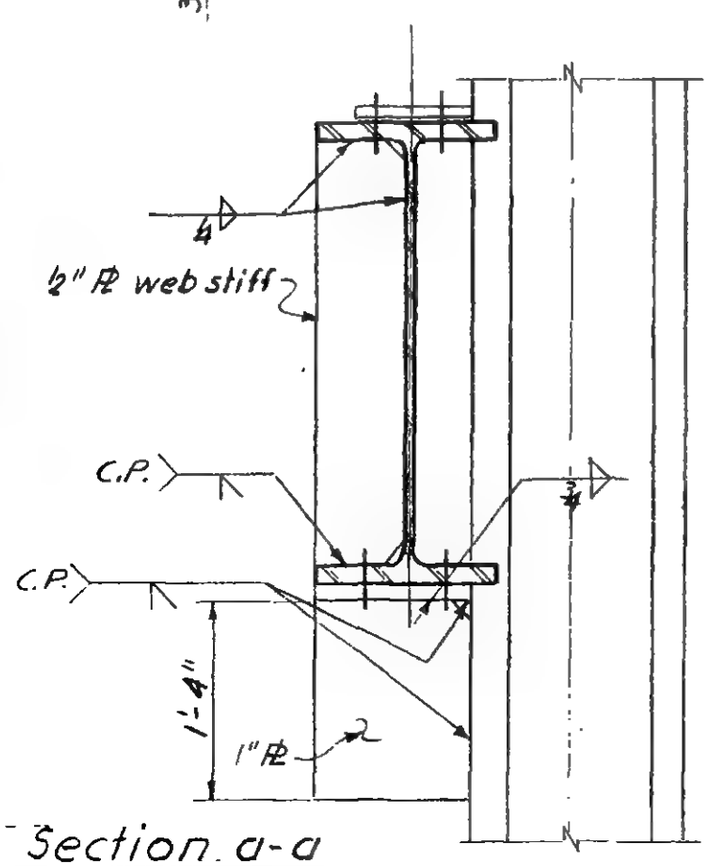

Section a-a

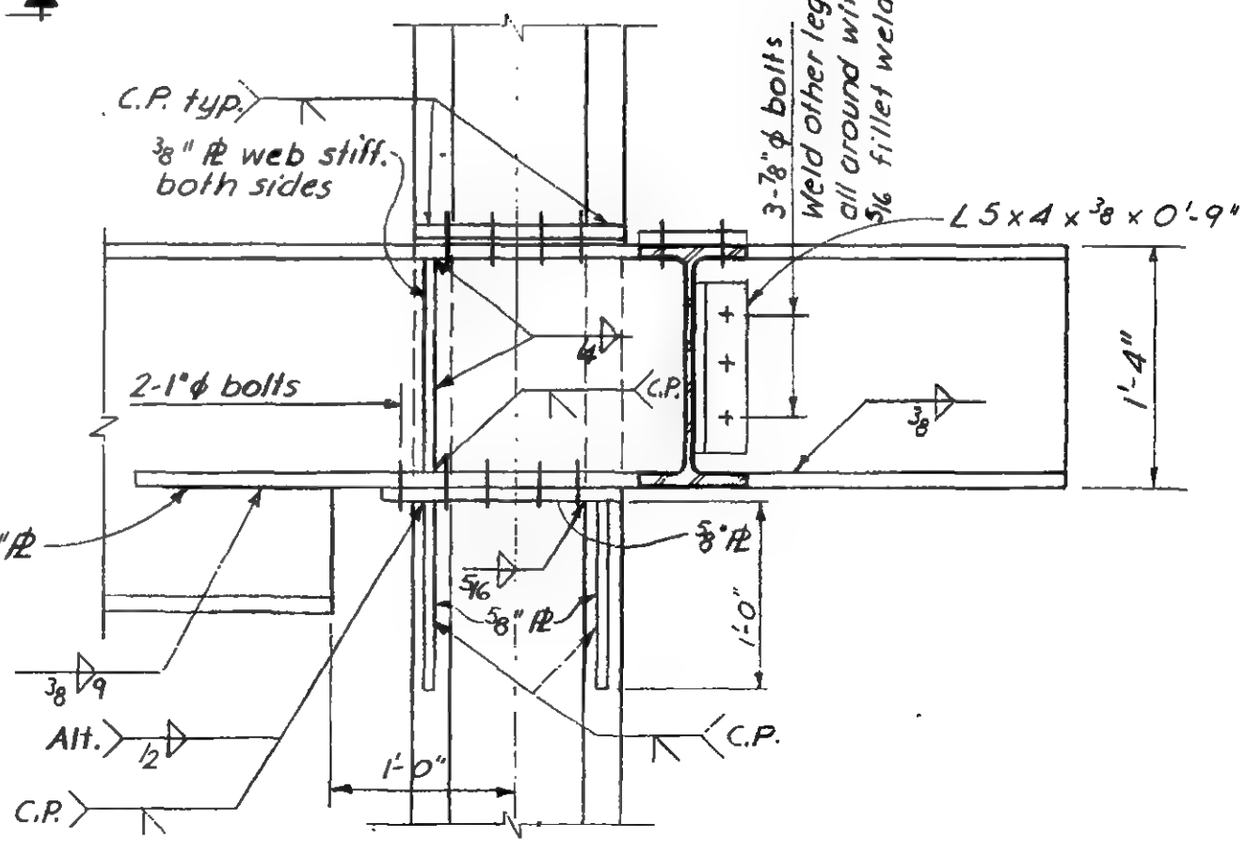

Section b-b

LICENSED PROFESSIONAL ENGINEER
LESLIE E. ROBERTSON
No. 34360
THE STATE OF NEW YORK

6-ABI-142.10

WORTHINGTON, SKILLING, HELLE & JACKSON Civil & Structural Engineers

PROJECT THE WORLD TRADE CENTER | TITLE CONNECTION DETAIL 336 | DATE 7/20/67

REVISIONS

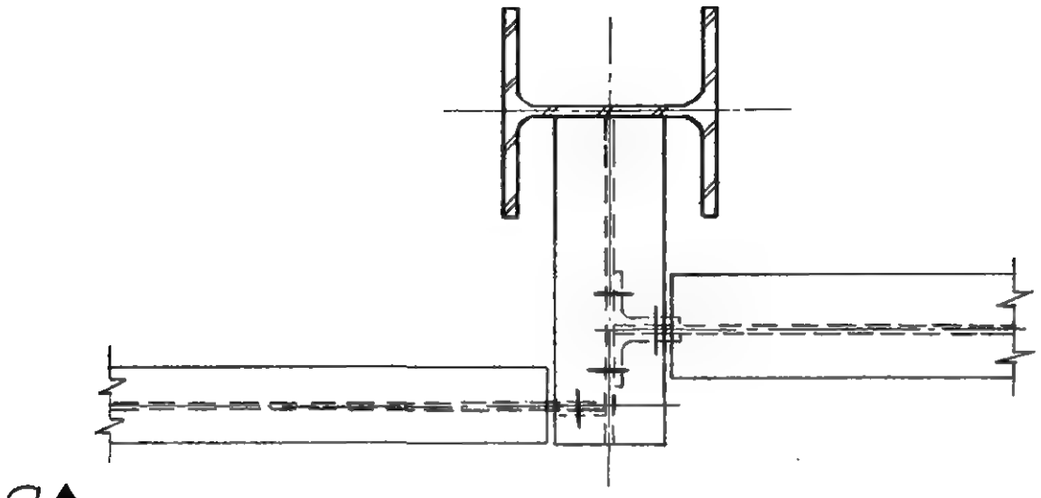

PLAN

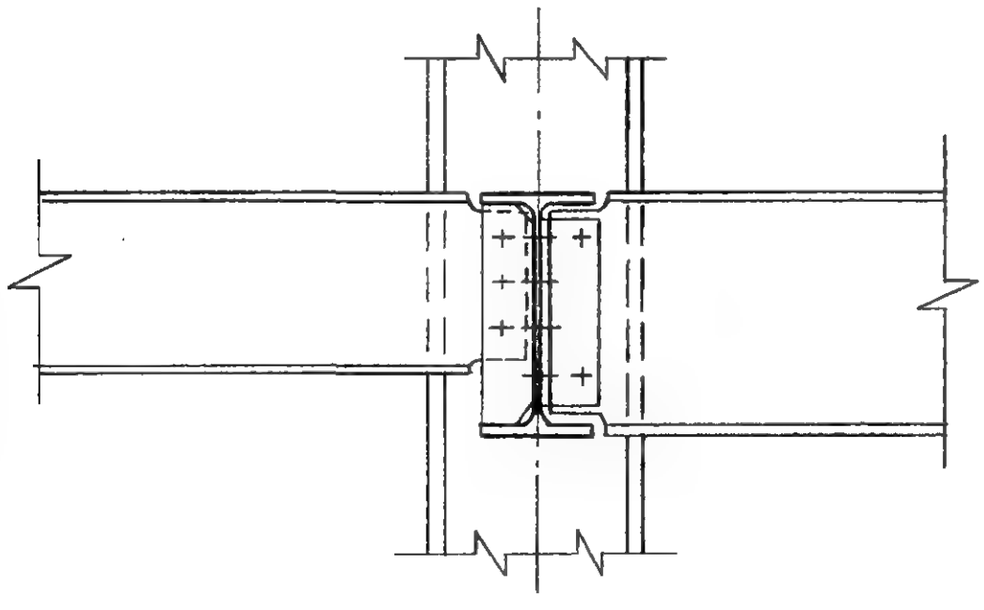

Section a-a

LICENSED PROFESSIONAL ENGINEER
LESLIE E. ROBERTSON
No. 34560
STATE OF NEW YORK

6-AB1-143

WORTHINGTON, SKILLING, HELLE & JACKSON — Civil & Structural Engineers

PROJECT: THE WORLD TRADE CENTER | TITLE: CONNECTION DETAIL 337 A | DATE: 6-12-67

REVISIONS

7-28-67

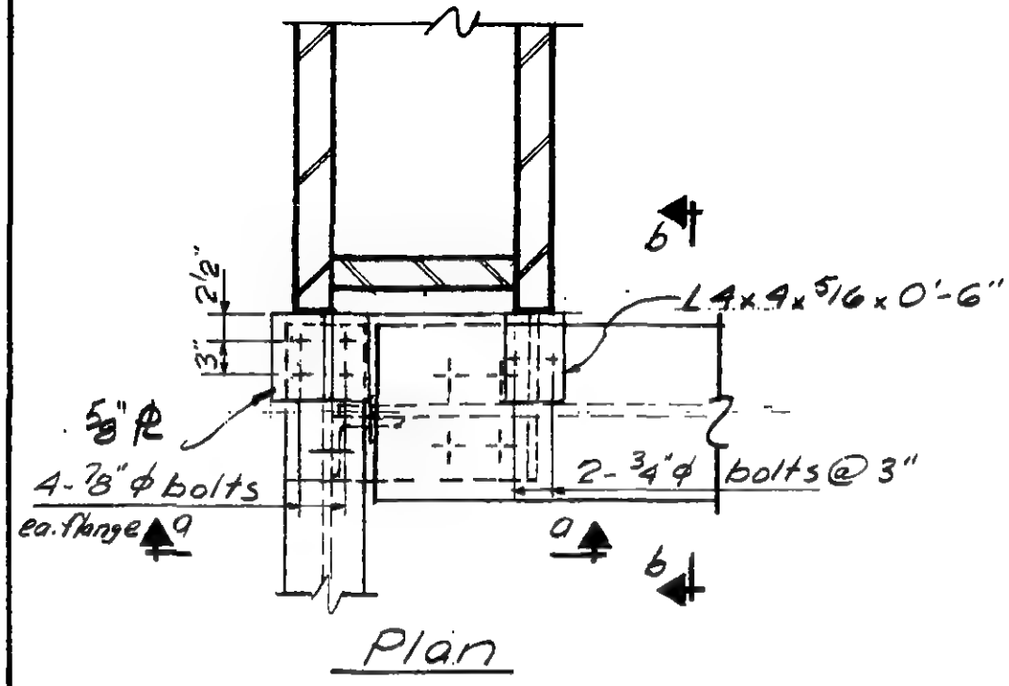

Plan

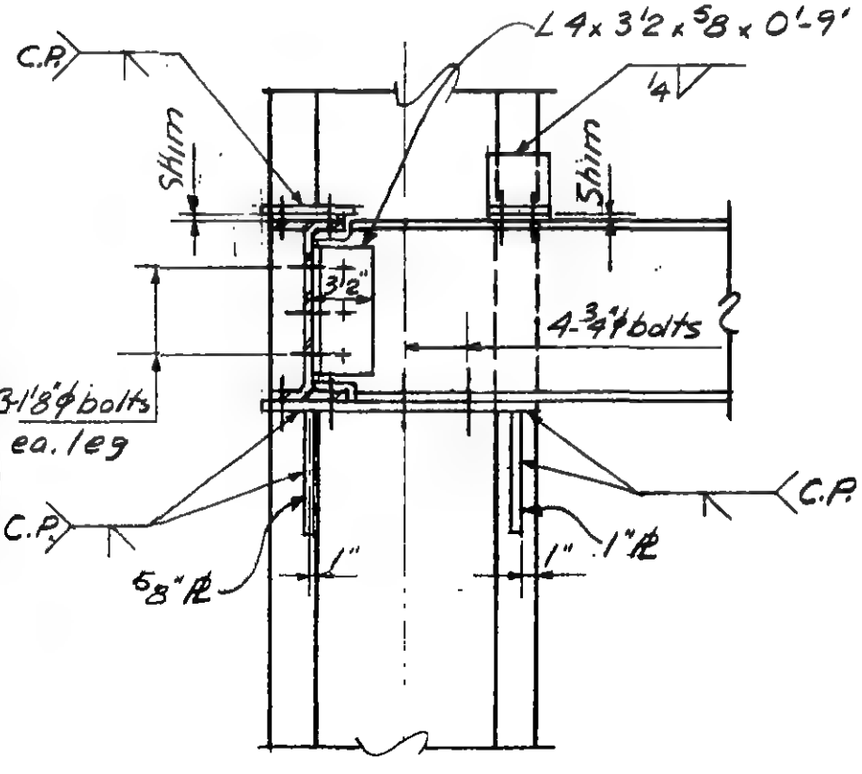

Section a-a

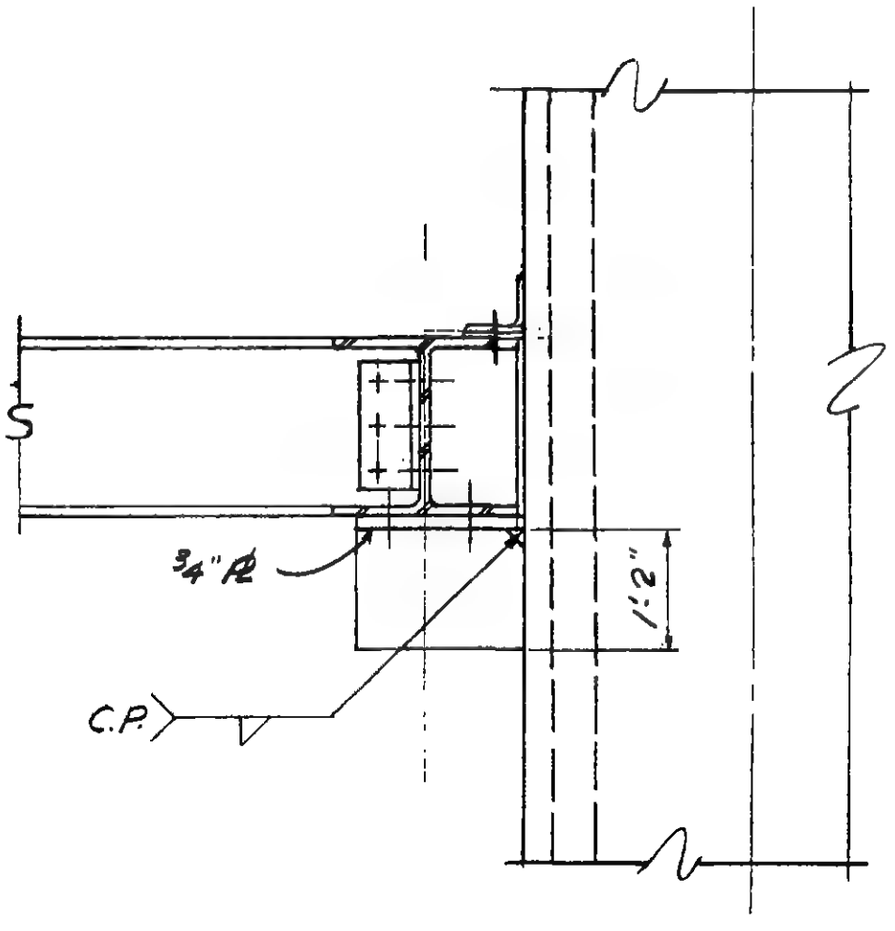

Section b-b

LICENSED PROFESSIONAL ENGINEER
LESLIE E. ROBERTSON
No. 34360
UNIVERSITY OF THE STATE OF NEW YORK

G-AB1-144

SKILLING - HELLE - CHRISTIANSEN - ROBERTSON Structural & Civil Engineers

PROJECT THE WORLD TRADE CENTER | TITLE CONNECTION DETAIL 337 B,C | DATE 8-5-67

REVISIONS

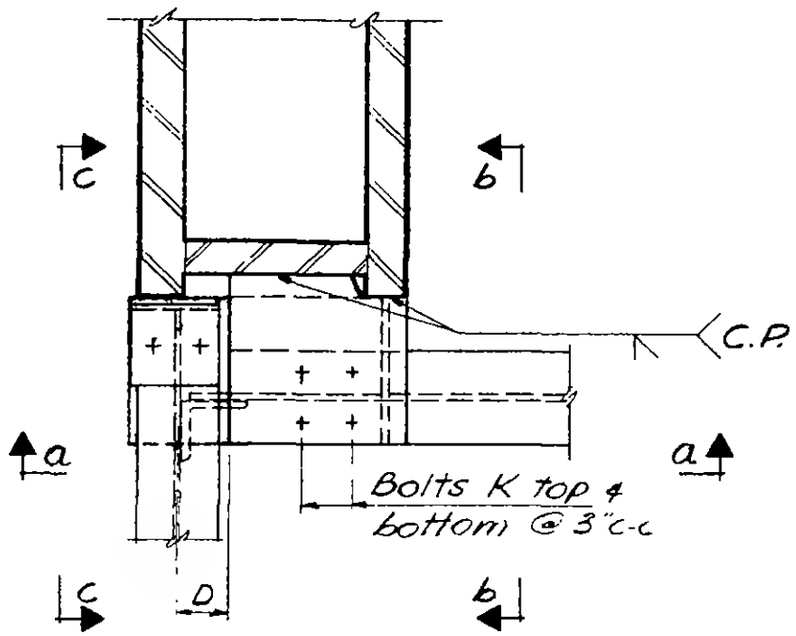

Plan

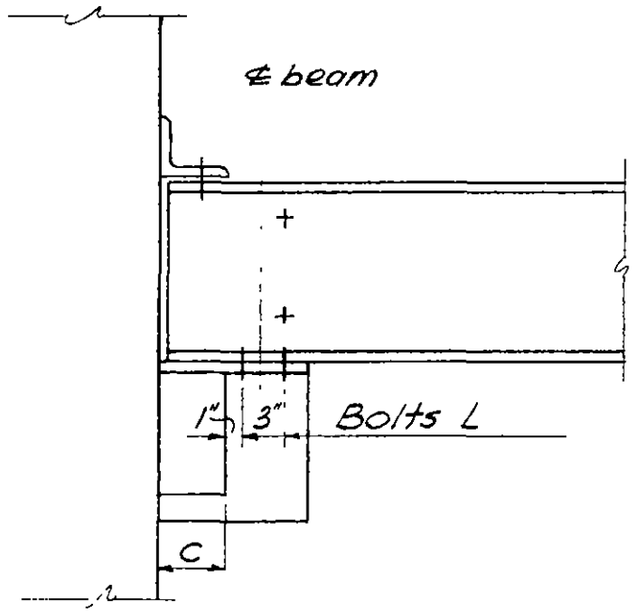

Section c-c

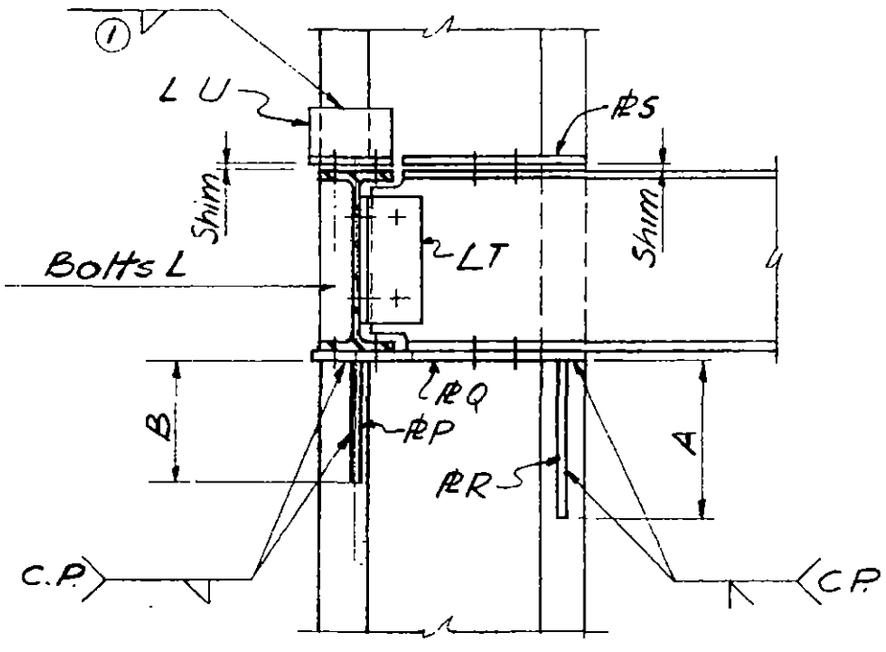

Section a-a

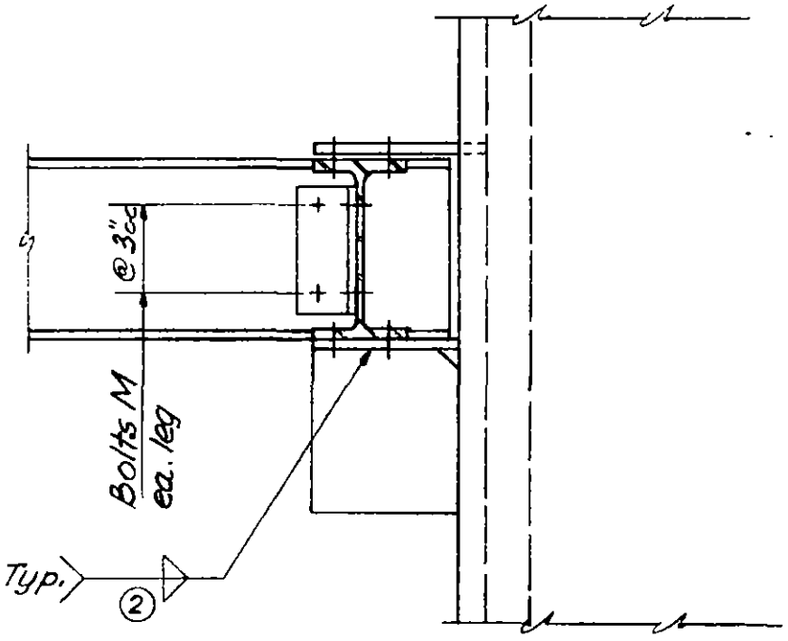

Section b-b

6-AB1-144.1

WORTHINGTON, SKILLING, HELLE & JACKSON — Civil & Structural Engineers

PROJECT THE WORLD TRADE CENTER | TITLE SCHEDULE FOR DETAIL 337 B,C | DATE 8-5-67

REVISIONS

	337 B,C
PLATES	
P	5/8
Q	3/4
R	1
S	3/4
ANGLES	
T	4×4×5/16×0'-11½"
U	4×4×5/16×0'-6"
DIMENSIONS	
A	1'-2"
B	1'-2"
C	0'-4"
D	0'-4"
BOLTS	
K	4-1"ϕ
L	2-3/4"ϕ
M	4-3/4"ϕ
WELDS	
①	1/4
②	5/16

LICENSED PROFESSIONAL ENGINEER LESLIE E. ROBERTSON No. 34360 UNIVERSITY OF THE STATE OF NEW YORK

6-AB1-144.2

WORTHINGTON, SKILLING, HELLE & JACKSON — Civil & Structural Engineers

PROJECT: THE WORLD TRADE CENTER | TITLE: CONNECTION DETAIL 338 A,B,D,E,G,H | DATE: 5-1-67

REVISIONS
6-30-67
7-28-67
8-5-67
10-2-67
2-9-68

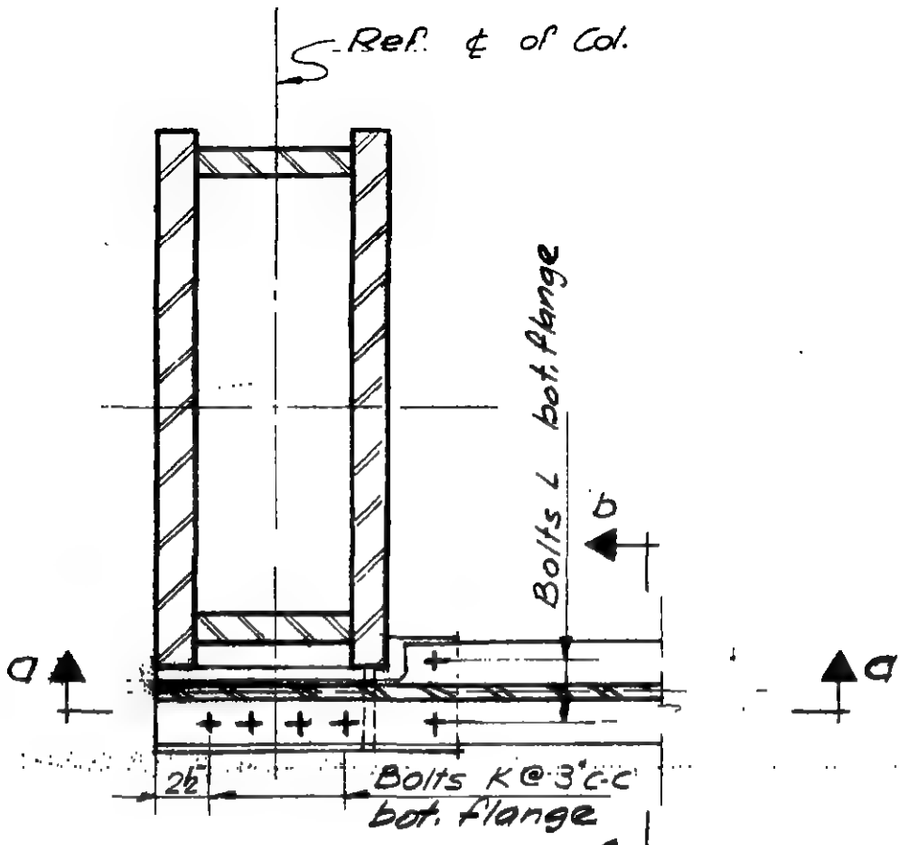

PLAN
Where bolts K & L are scheduled

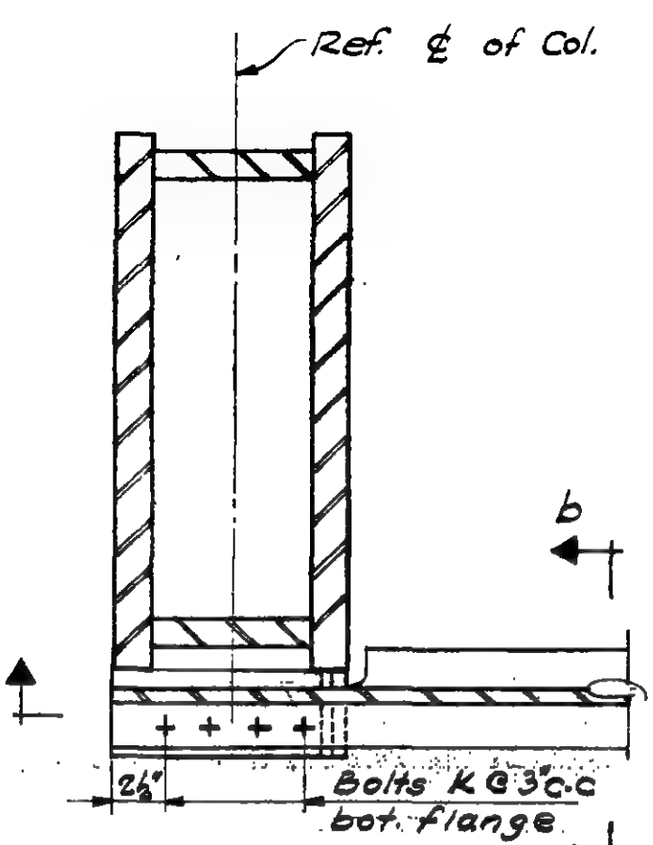

PLAN
Where bolts K only are scheduled

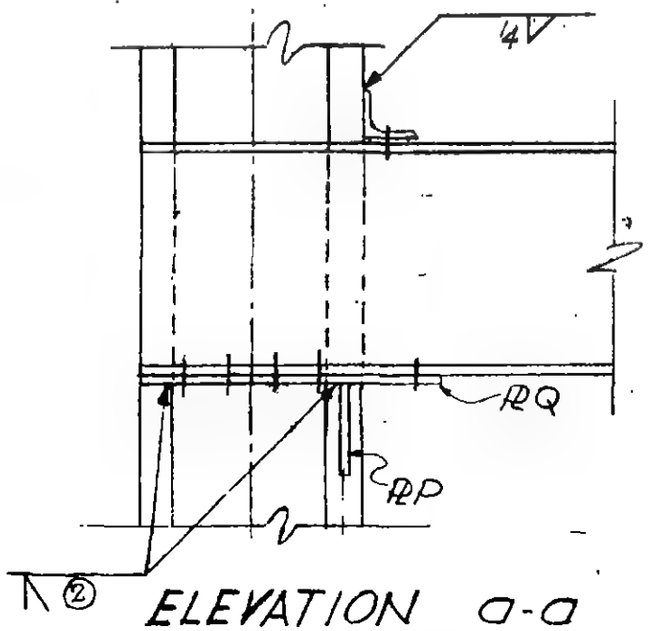

ELEVATION a-a

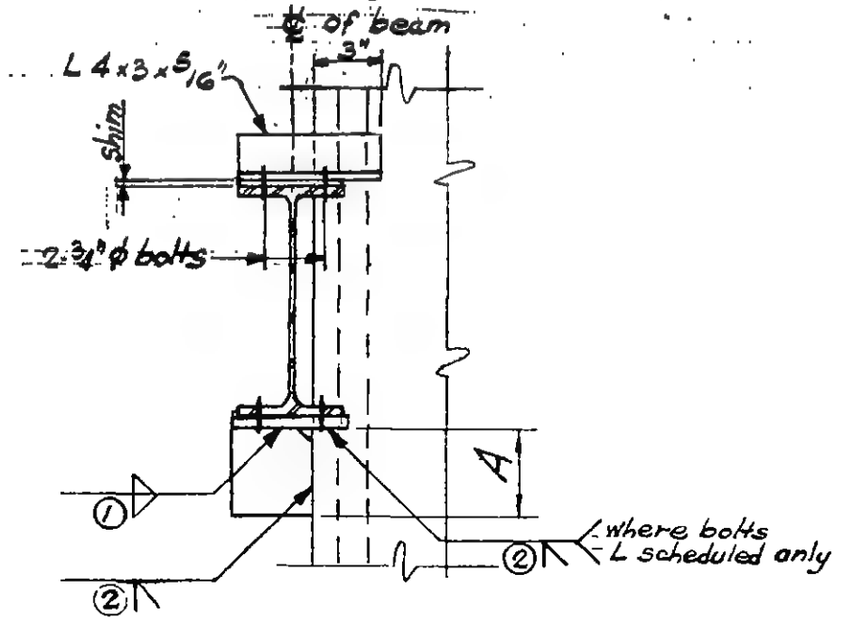

Section b-b

LICENSED PROFESSIONAL ENGINEER
LESLIE E. ROBERTSON
No. 34206
UNIVERSITY OF THE STATE OF NEW YORK

G-AB1-145

SKILLING - HELLE - CHRISTIANSEN - ROBERTSON Structural & Civil Engineers

PROJECT THE WORLD TRADE CENTER | TITLE SCHEDULE FOR DETAIL 338 A-H | DATE 6-30-67

REVISIONS

7-28-67
8-5-67
10-2-67
2-9-68

REF. DWG	6-ABI-145	6-ABI-145.2	6-ABI-145	6-ABI-145.4	6-ABI-145	6-ABI-145
	338 A,B,F	338 C	338 D	338 E	338 G	338 H
PLATES						
Q	¾"	1"	½"	¾"	¾"	¾"
P	¾"	¾"	½"	¾"	¾"	8" x ¾"
DIMENSIONS						
A	0'-6"	1'-0"	0'-8"	1'-0"	0'-10"	1'-2"
BOLTS						
K	4-1"φ (A325)	6-1"φ (A325)	4-¾"φ (A325)	4-¾"φ (A325)	4-¾"φ	4-1"φ
L	2-1"φ (A325)	—	—	—	2-¾" φ	2-1"φ
WELDS						
①	3/8	3/8	5/16	5/16	5/16	3/8
②	C.P.	C.P.	C.P.	C.P.	C.P.	C.P.

LICENSED PROFESSIONAL ENGINEER
LESLIE E. ROBERTSON
No. 34360
UNIVERSITY OF THE STATE OF NEW YORK

6-ABI-145.1

WORTHINGTON, SKILLING, HELLE & JACKSON — Civil & Structural Engineers

PROJECT: THE WORLD TRADE CENTER | TITLE: CONNECTION DETAIL 338 C | DATE: 6-30-67

REVISIONS

7-28-67

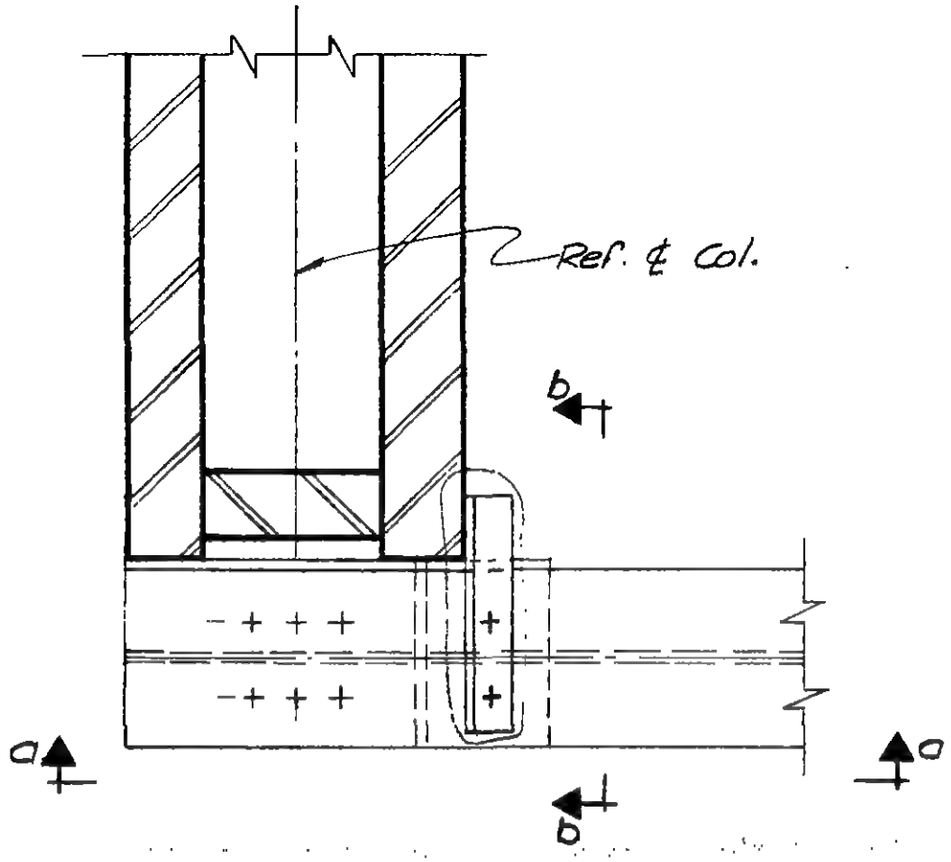

PLAN

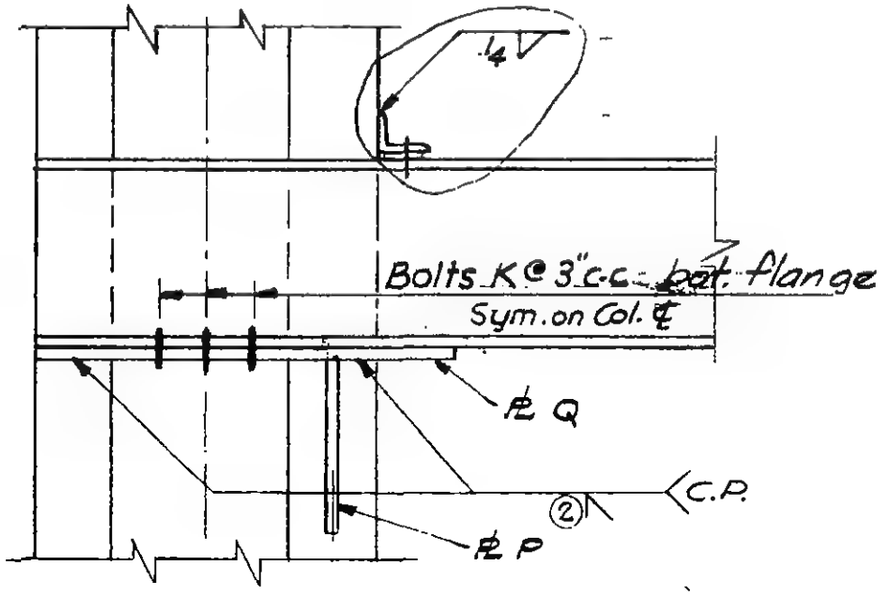

Section a-a

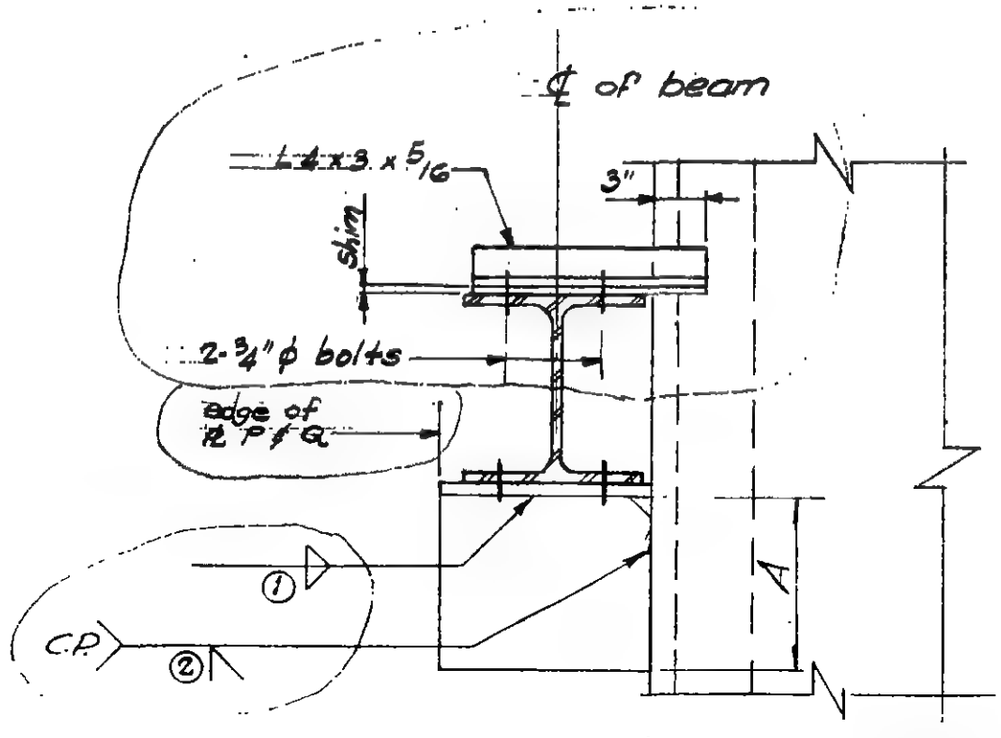

Section b-b

LICENSED PROFESSIONAL ENGINEER
LESLIE E. ROBERTSON
No. 34360
UNIVERSITY OF THE STATE OF NEW YORK

6-ABI-145.2

WORTHINGTON, SKILLING, HELLE & JACKSON — Civil & Structural Engineers

PROJECT: THE WORLD TRADE CENTER | TITLE: CONNECTION DETAIL 338E | DATE: 7-28-67

REVISIONS

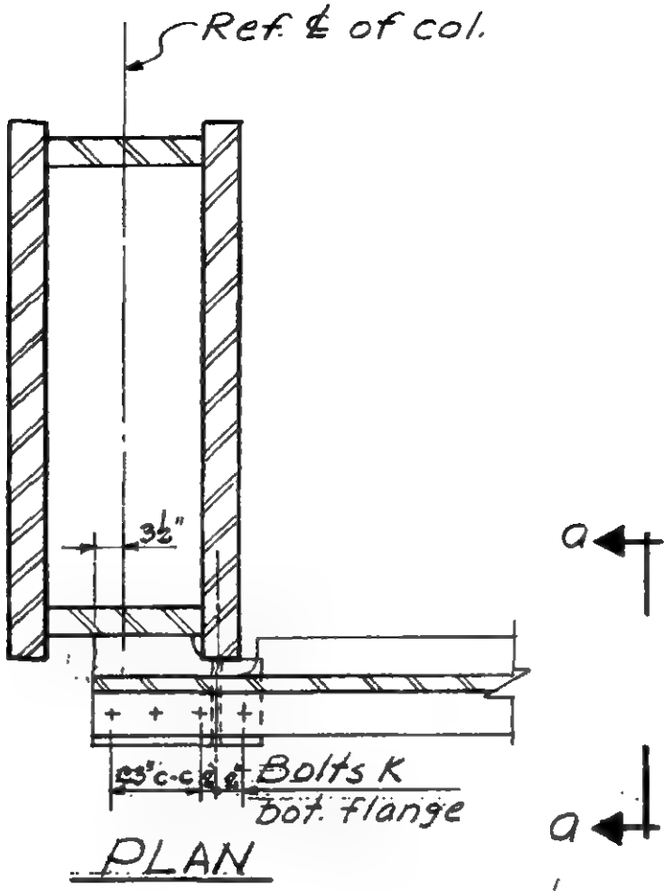

PLAN

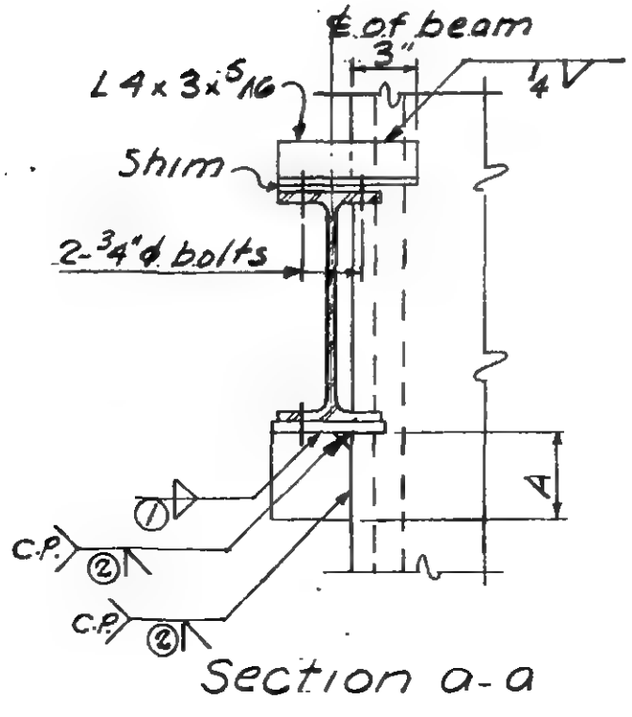

Section a-a

6.AB1-145.4

WORTHINGTON, SKILLING, HELLE & JACKSON — Civil & Structural Engineers

PROJECT: THE WORLD TRADE CENTER | TITLE: CONNECTION DETAIL 339 | DATE: 6-30-67

REVISIONS

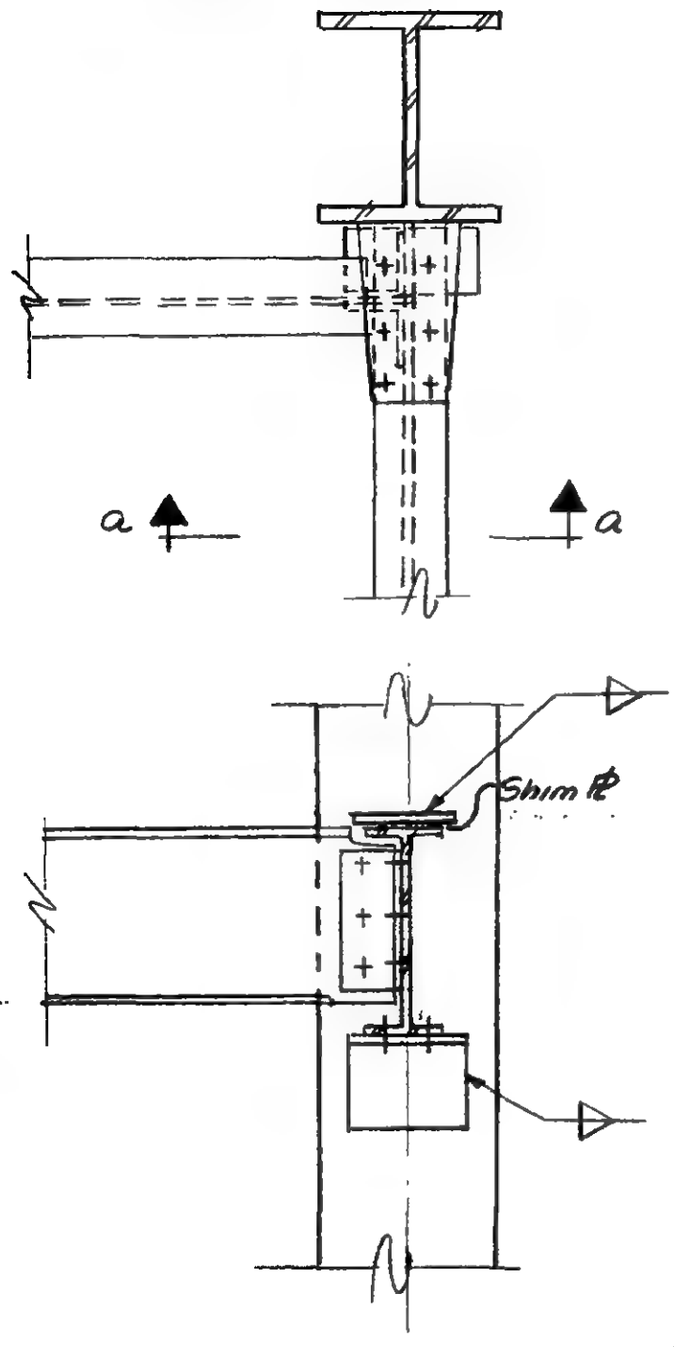

SECTION a-a

LICENSED PROFESSIONAL ENGINEER
LESLIE E. ROBERTSON
No. 34360
UNIVERSITY OF THE STATE OF NEW YORK

WORTHINGTON, SKILLING, HELLE & JACKSON — Civil & Structural Engineers

PROJECT THE WORLD TRADE CENTER | TITLE CONNECTION DETAIL 340

REVISIONS

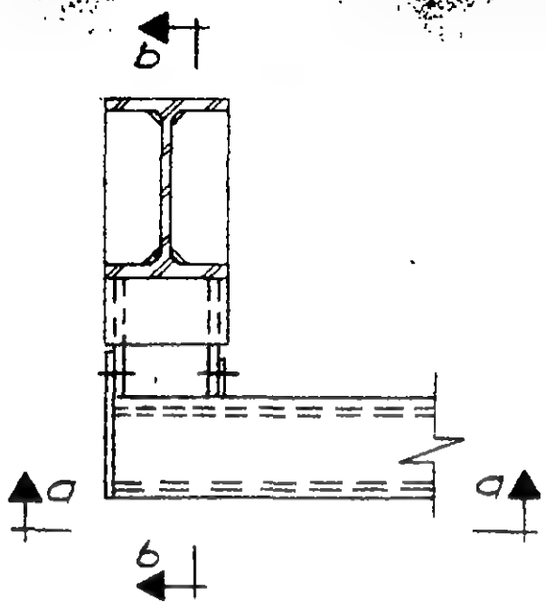

PLAN

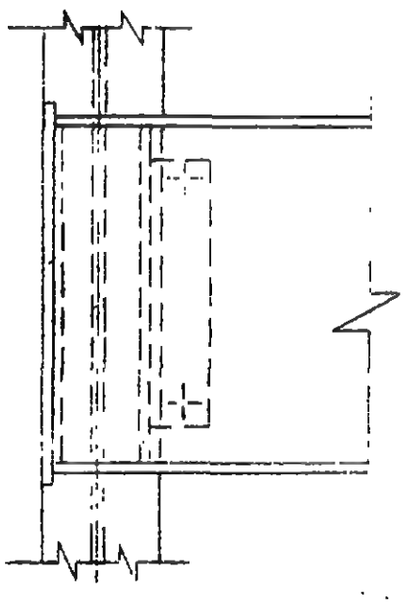

Section a-a

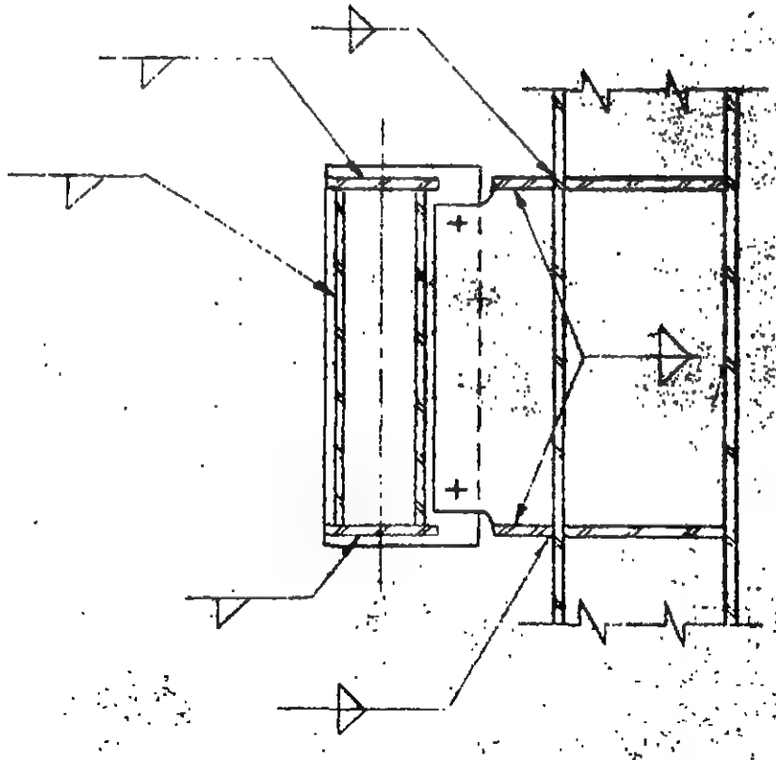

Section b-b

LICENSED PROFESSIONAL ENGINEER
LESLIE E. ROBERTSON
No. 34360
STATE OF NEW YORK

6-ABI-147

WORTHINGTON, SKILLING, HELLE & JACKSON — Civil & Structural Engineers

PROJECT: THE WORLD TRADE CENTER | TITLE: CONNECTION DETAIL 341 | DATE: 7/20/67

REVISIONS

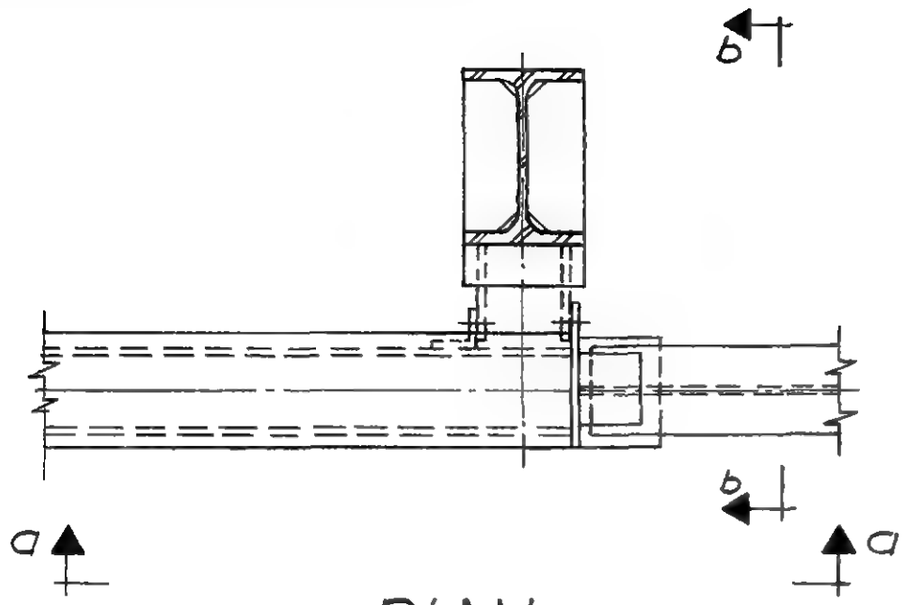

PLAN

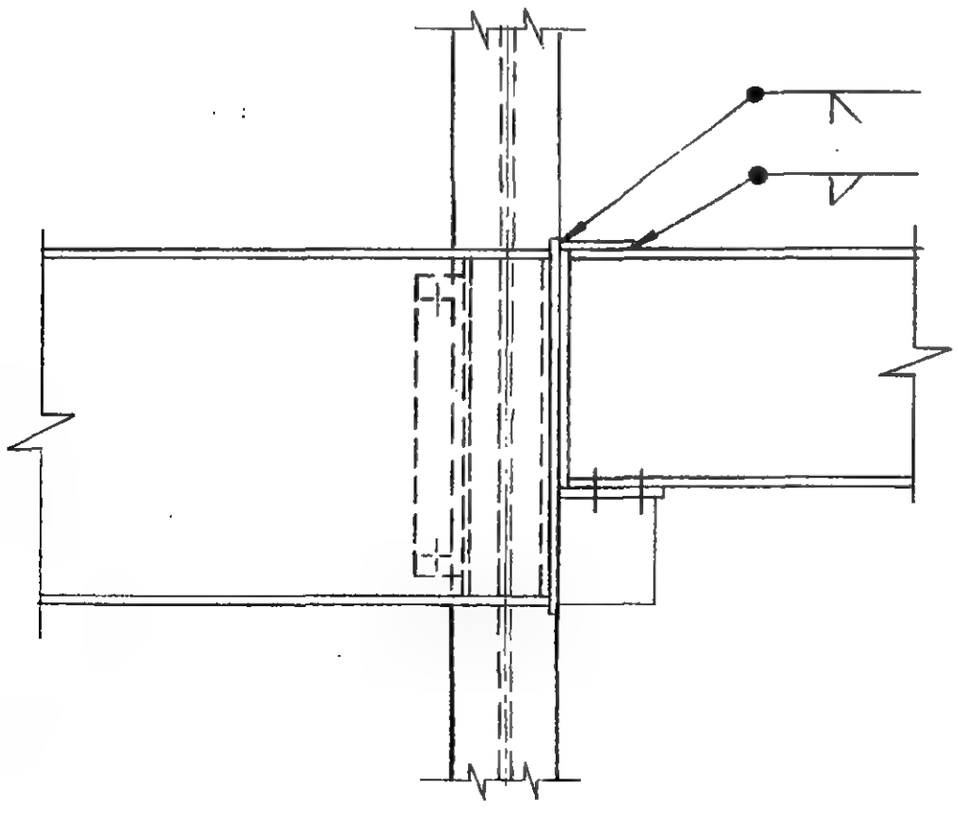

Section a-a

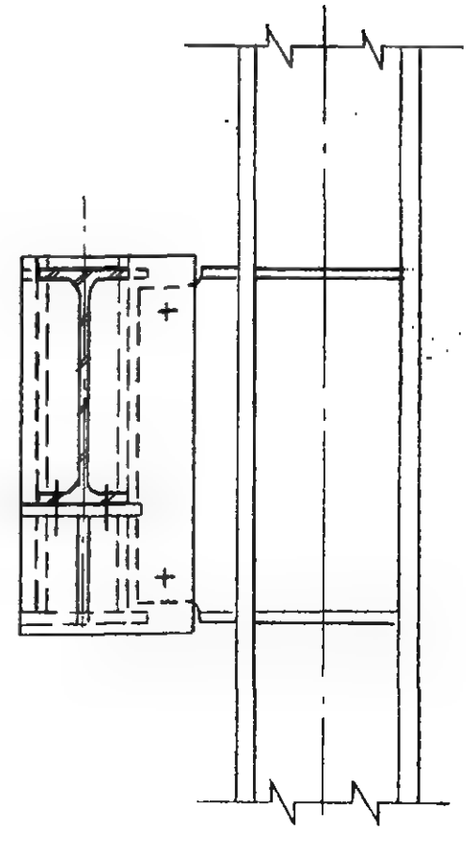

Section b-b

LICENSED PROFESSIONAL ENGINEER
LESLIE E. ROBERTSON
No. 34300
UNIVERSITY OF THE STATE OF NEW YORK

6-AB1-148

WORTHINGTON, SKILLING, HELLE & JACKSON — Civil & Structural Engineers

PROJECT THE WORLD TRADE CENTER | TITLE CONNECTION DETAIL 342 A | DATE 6-30-67

REVISIONS

10-5-67

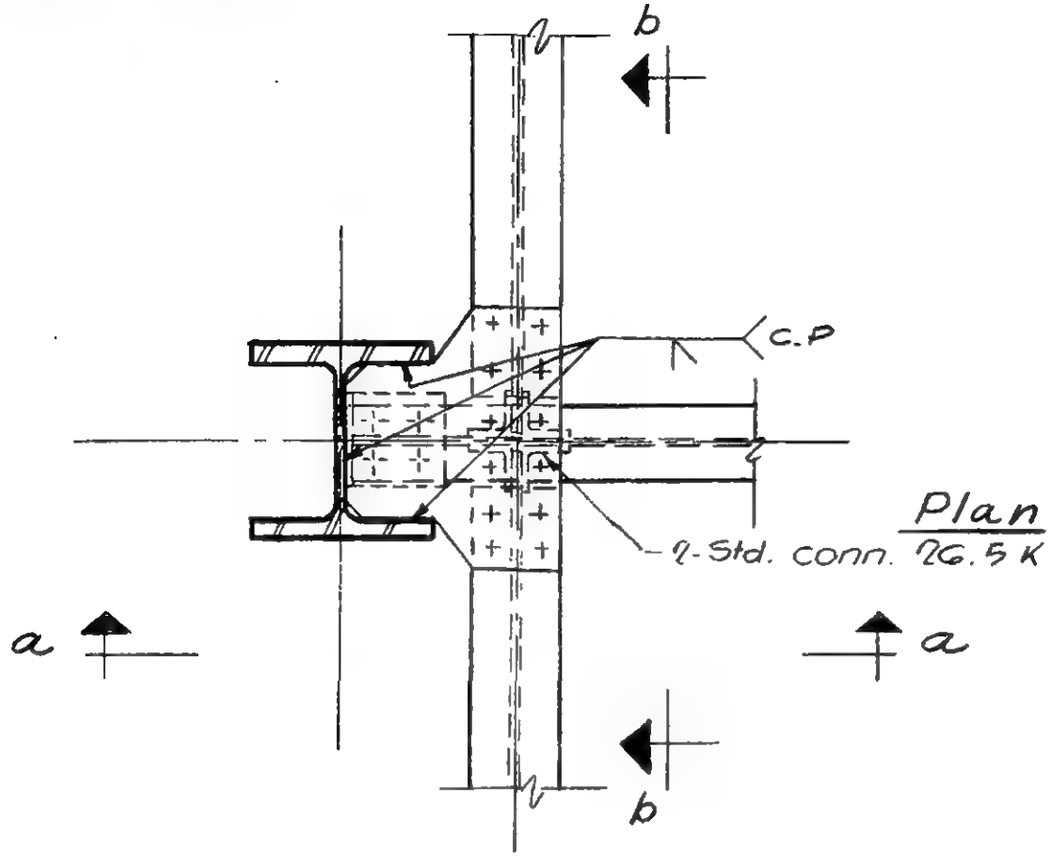

Plan

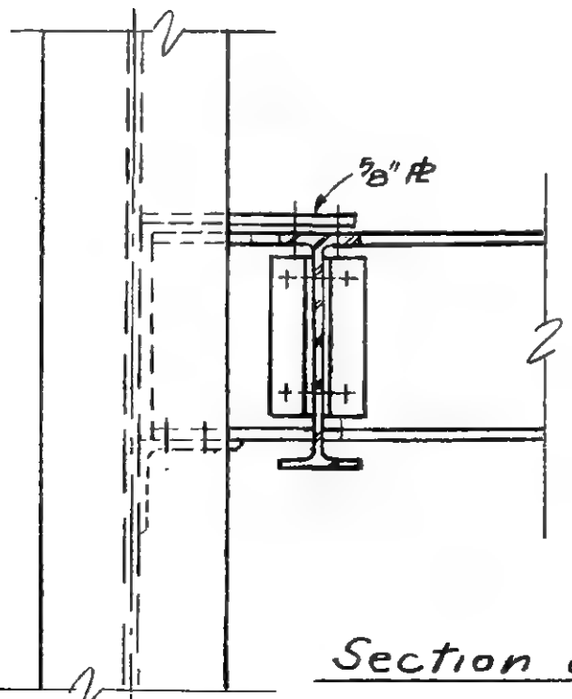

Section a-a

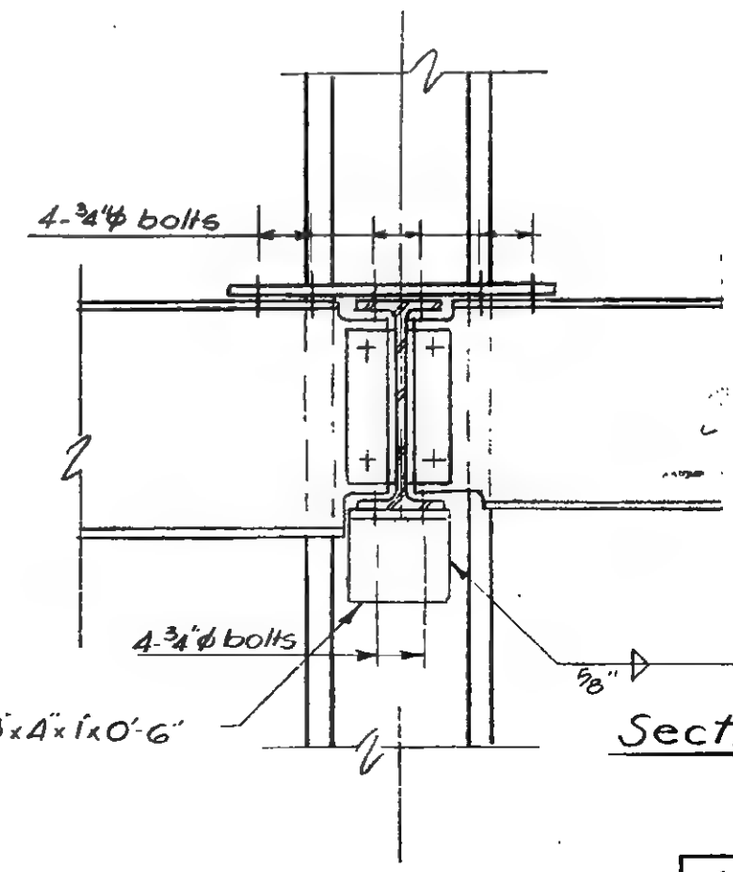

Section b-b

LICENSED PROFESSIONAL ENGINEER
LESLIE E. ROBERTSON
No. 34360
UNIVERSITY OF THE STATE OF NEW YORK

6-AB1-149

WORTHINGTON, SKILLING, HELLE & JACKSON — Civil & Structural Engineers

PROJECT	TITLE	DATE
THE WORLD TRADE CENTER	CONNECTION DETAIL 343A	7-28-67

REVISIONS

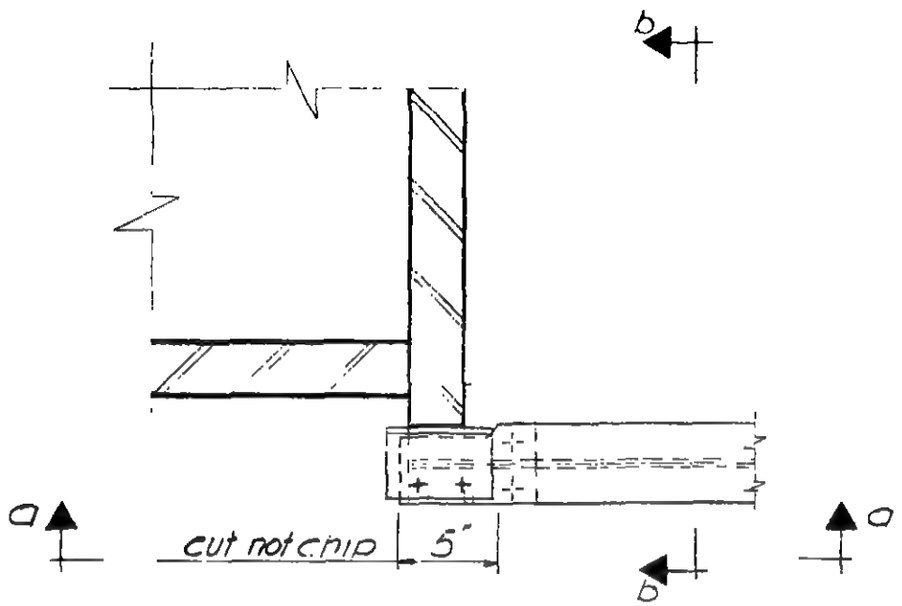

PLAN

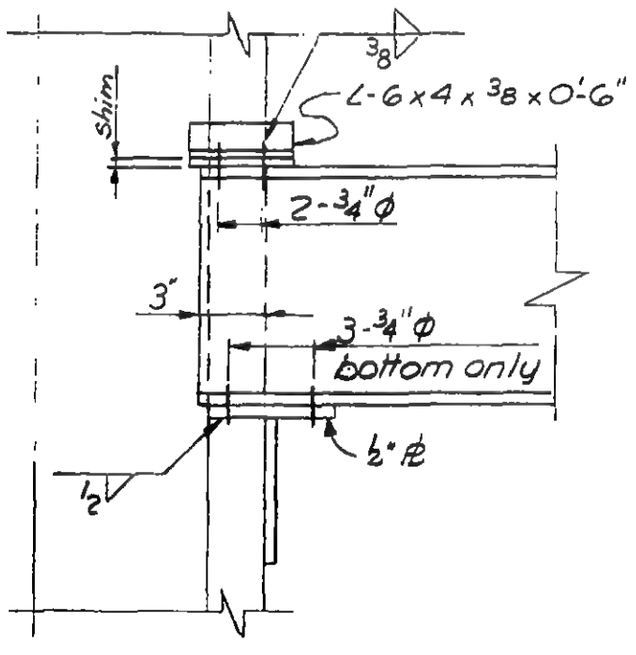

Section a-a

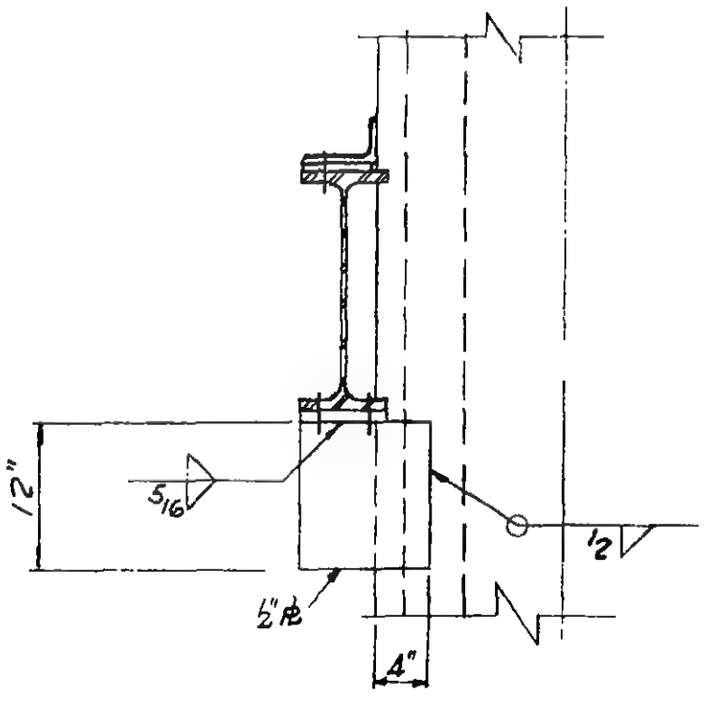

Section b-b

LICENSED PROFESSIONAL ENGINEER — LESLIE E. ROBERTSON — No. 34360 — UNIVERSITY OF THE STATE OF NEW YORK

6-AB1-150

WORTHINGTON, SKILLING, HELLE & JACKSON — Civil & Structural Engineers

PROJECT: THE WORLD TRADE CENTER | TITLE: CONNECTION DETAIL 344 A | DATE: 6-5-67

REVISIONS

9-15-67

11-10-67

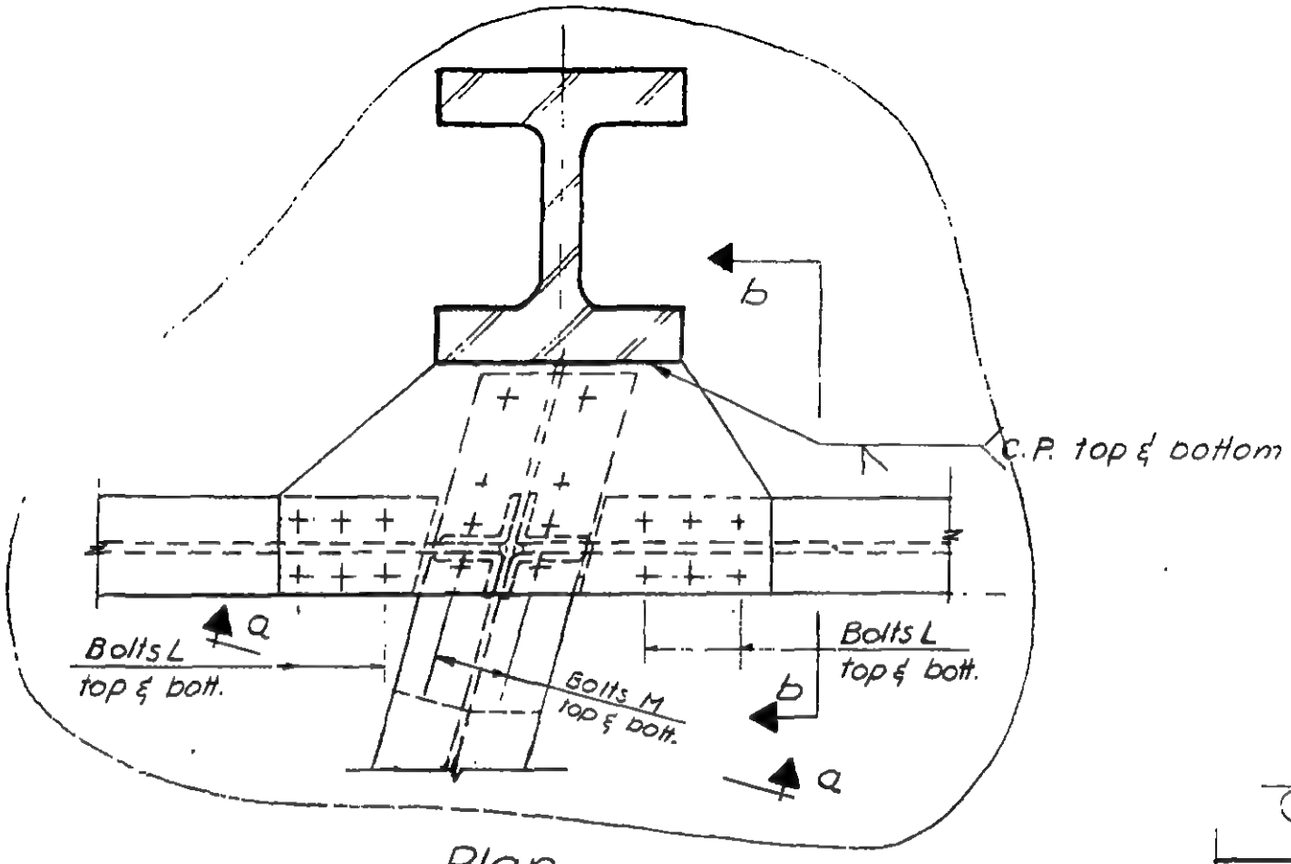

Plan

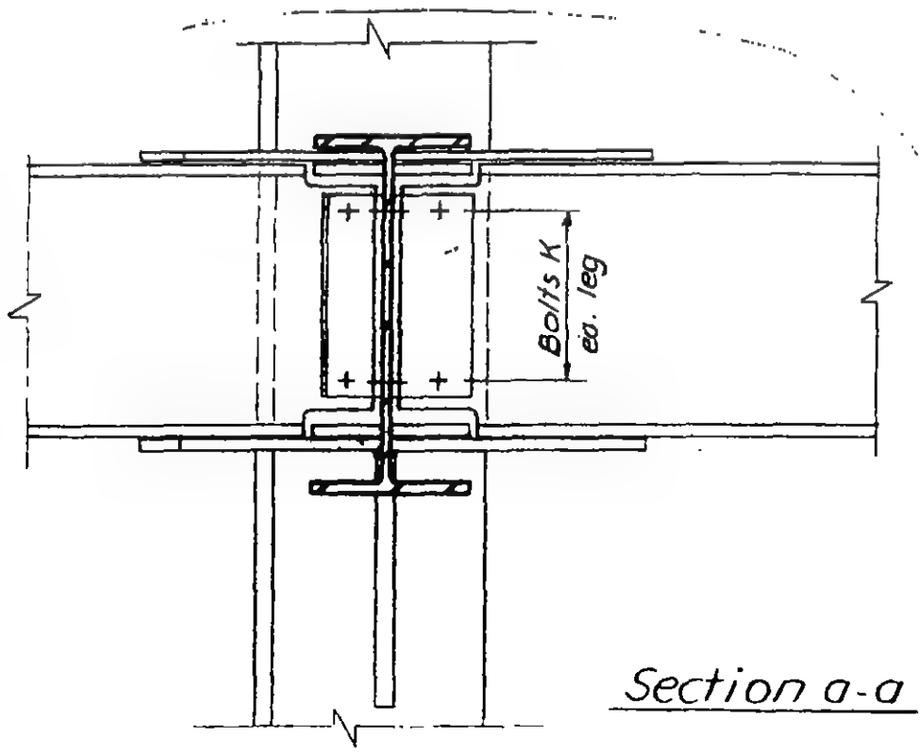

Section a-a

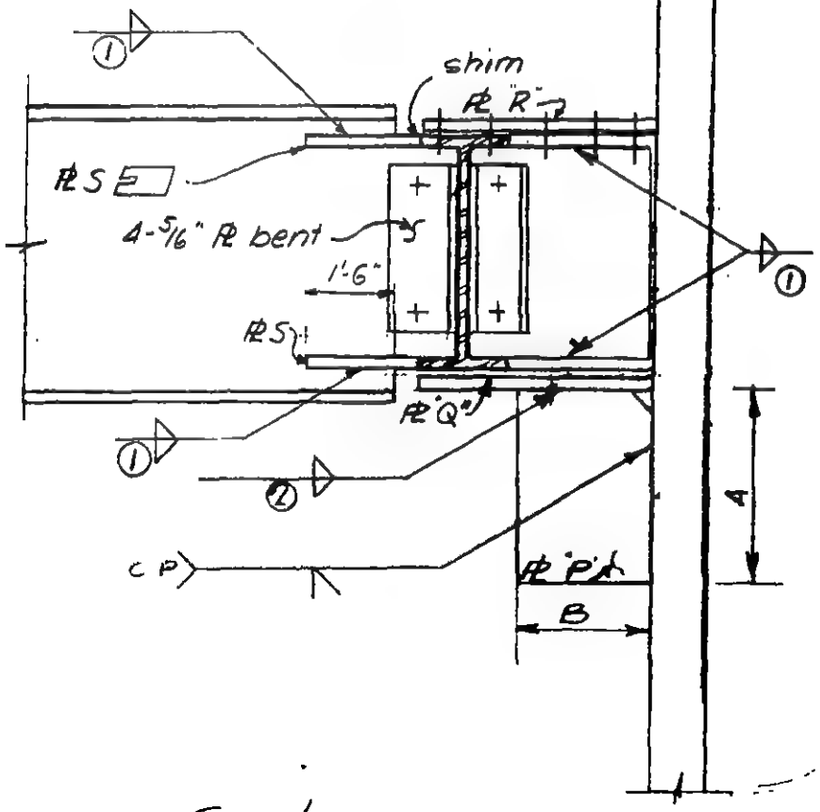

Section c.-c

LICENSED PROFESSIONAL ENGINEER — LESLIE E. ROBERTSON — No. 34360 — UNIVERSITY OF THE STATE OF NEW YORK

G-ABI-151

SKILLING - HELLE - CHRISTIANSEN - ROBERTSON Structural & Civil Engineers

PROJECT THE WORLD TRADE CENTER | TITLE SCHEDULE FOR DETAIL 344 A | DATE 9-15-67

REVISIONS

11-10-67

	344 A
PLATES	
P	3/4"
Q	3/4"
R	5/8"
S	9 x 3/4"
DIMENSIONS	
A	1'-6"
B	0'-7 1/2"
BOLTS	
K	5-3/4" ϕ
L	6-3/4 ϕ
M	8-3/4" ϕ
WELDS	
①	3/8
②	3/8

6-ABI-151.1

SKILLING - HELLE - CHRISTIANSEN - ROBERTSON Structural & Civil Engineers

PROJECT THE WORLD TRADE CENTER | TITLE CONNECTION DETAIL 345 A | DATE 10-2-67

REVISIONS

12-21-67

1-24-68

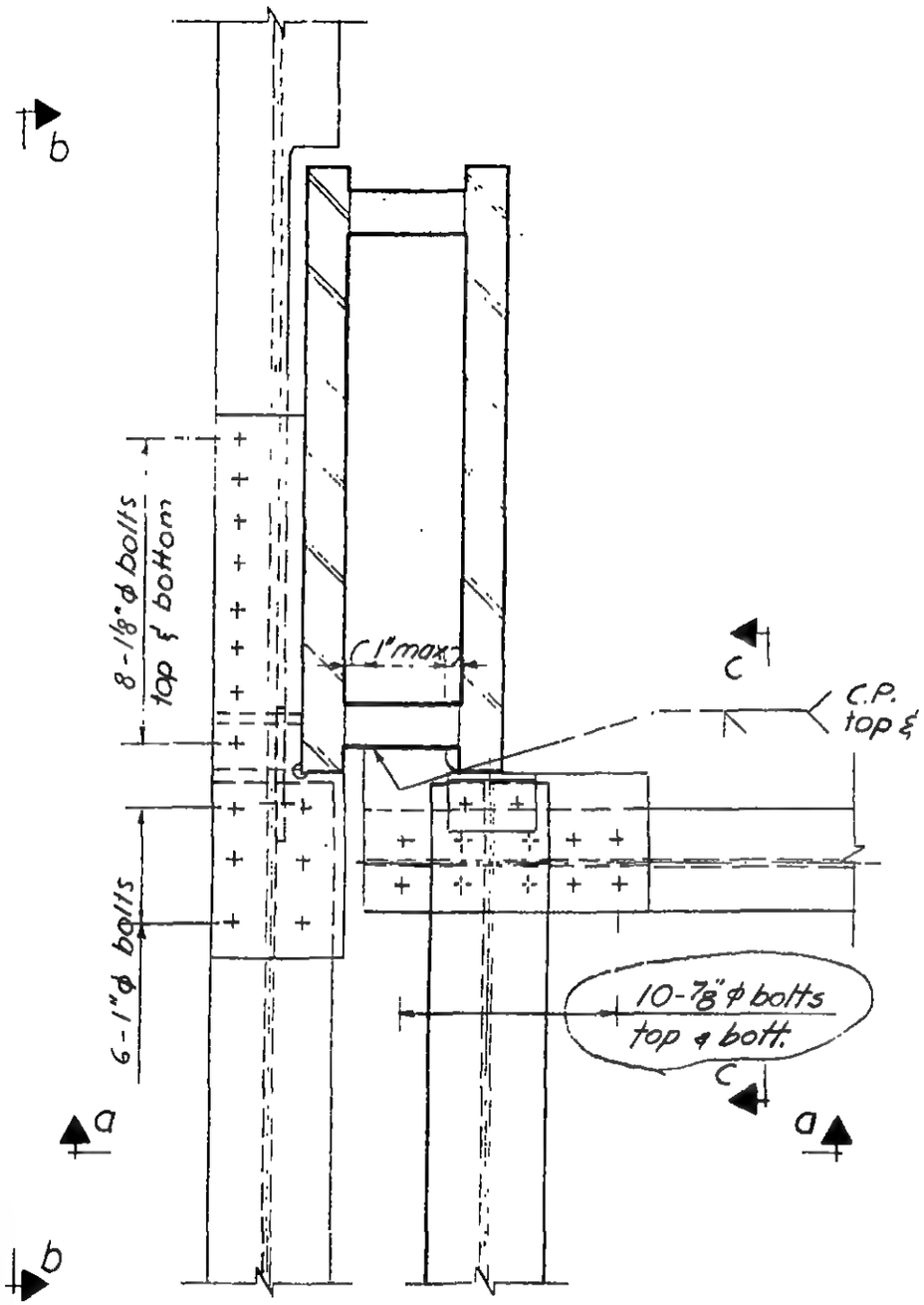

Plan

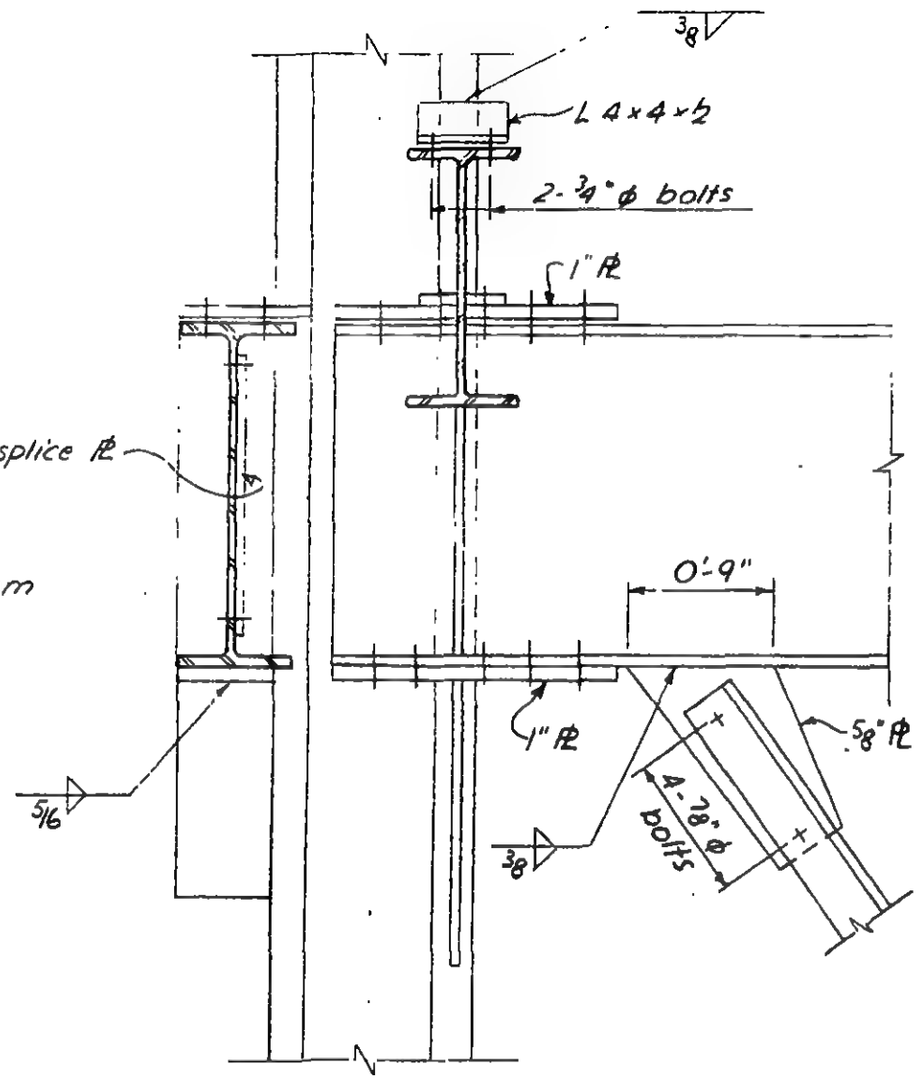

Section a-a

REGISTERED PROFESSIONAL ENGINEER
LESLIE E. ROBERTSON
No. 34360
UNIVERSITY OF THE STATE OF NEW YORK

6-AB1-152

SKILLING - HELLE - CHRISTIANSEN - ROBERTSON Structural & Civil Engineers

PROJECT THE WORLD TRADE CENTER | TITLE CONNECTION DETAIL 345 A | DATE 10-2-67

REVISIONS

12-21-67

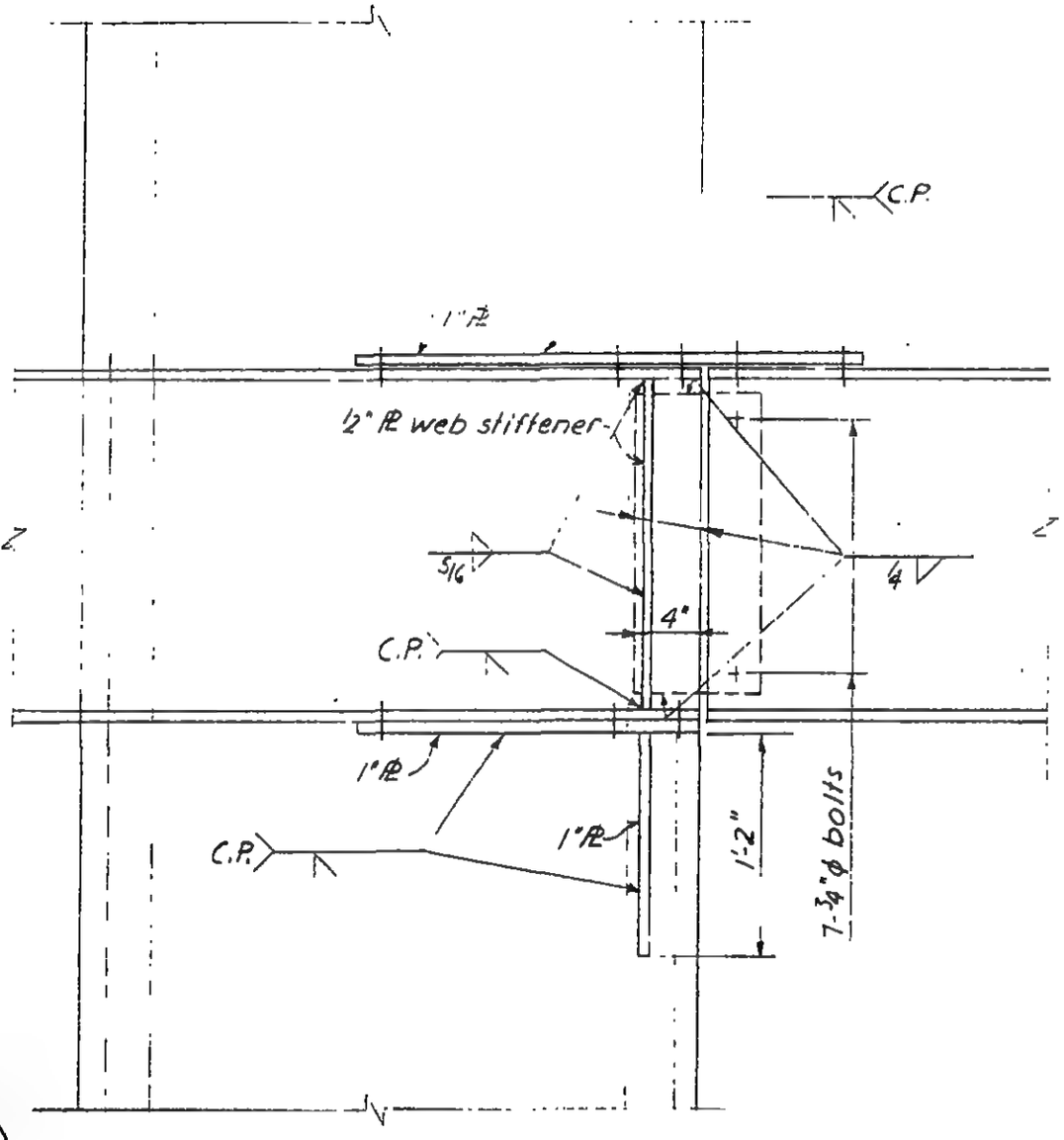

Section b-b

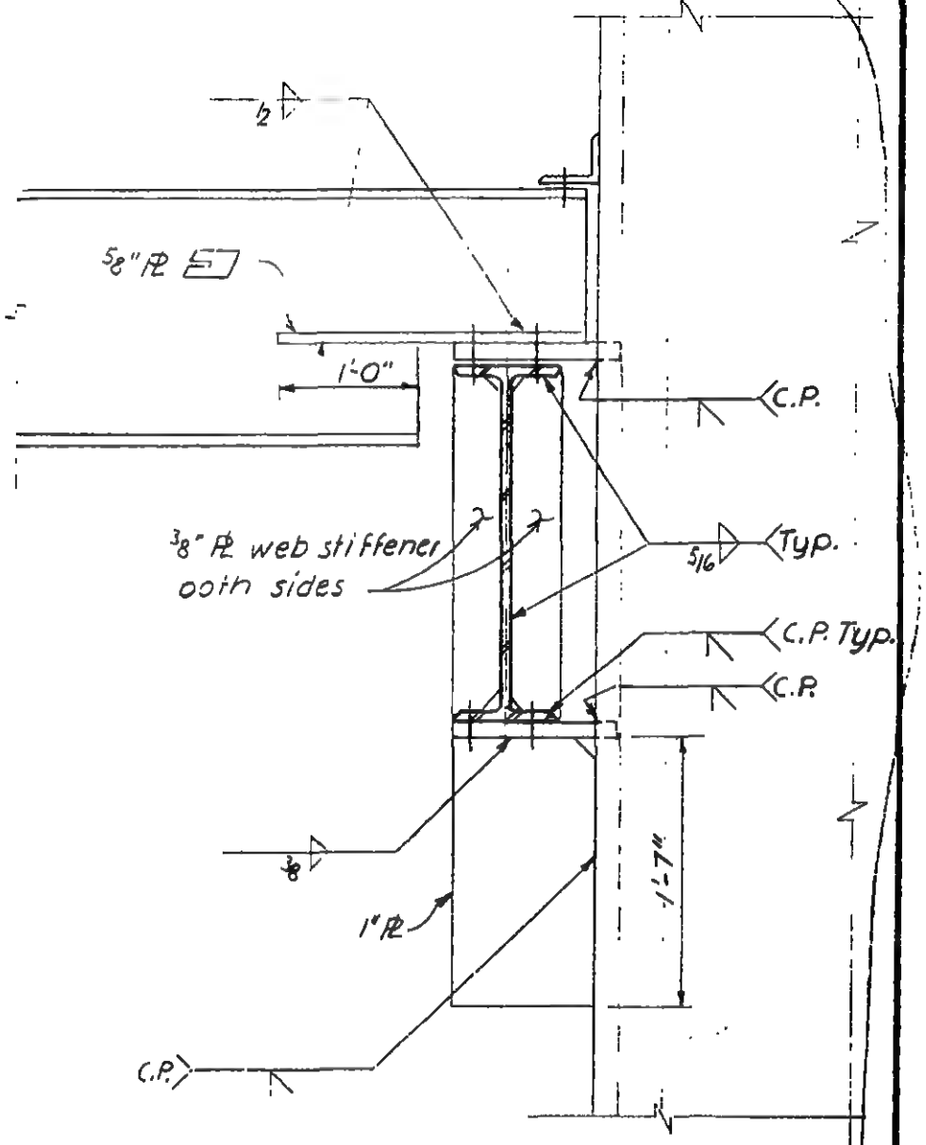

Section c-c

LICENSED PROFESSIONAL ENGINEER
LESLIE E. ROBERTSON
No. 34360
UNIVERSITY OF THE STATE OF NEW YORK

6 - ABI - 152.1

WORTHINGTON, SKILLING, HELLE & JACKSON — Civil & Structural Engineers

PROJECT THE WORLD TRADE CENTER | TITLE CONNECTION DETAIL 346.A | DATE 6-30-67

REVISIONS

10-5-67

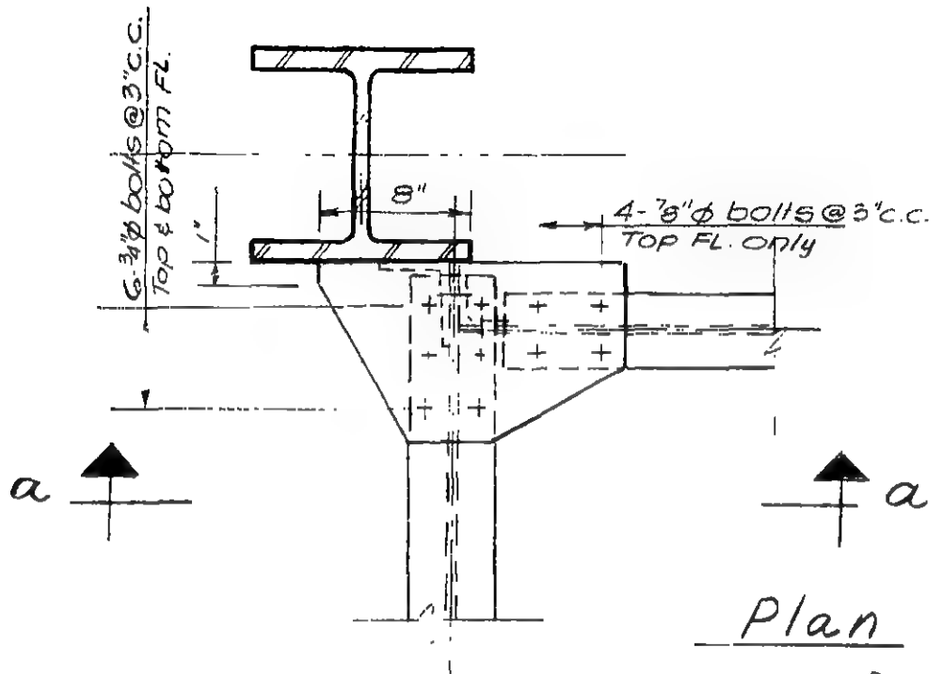

Plan

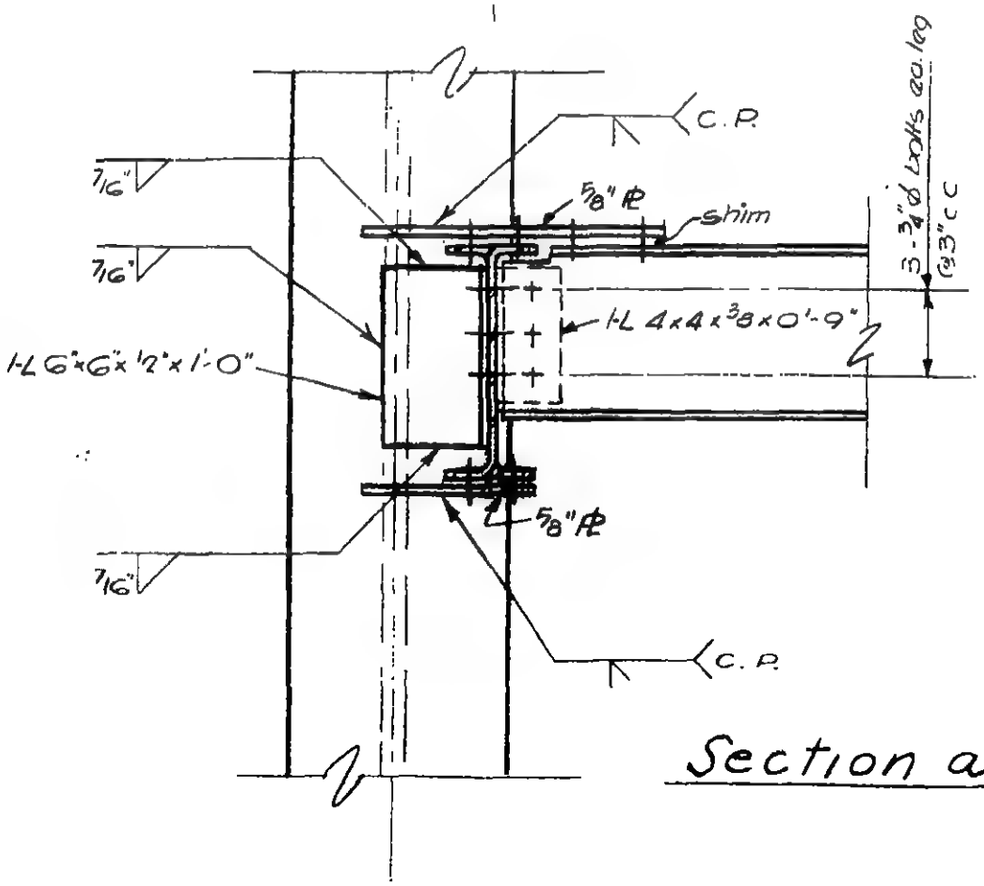

Section a-a

LICENSED PROFESSIONAL ENGINEER
LESLIE E. ROBERTSON
No. 34360
UNIVERSITY OF THE STATE OF NEW YORK

6-AB1-153

WORTHINGTON, SKILLING, HELLE & JACKSON — Civil & Structural Engineers

PROJECT: THE WORLD TRADE CENTER | TITLE: CONNECTION DETAIL 347 A | DATE: 5-1-67

REVISIONS
7-28-67
8-5-67
9-15-67
11-14-67

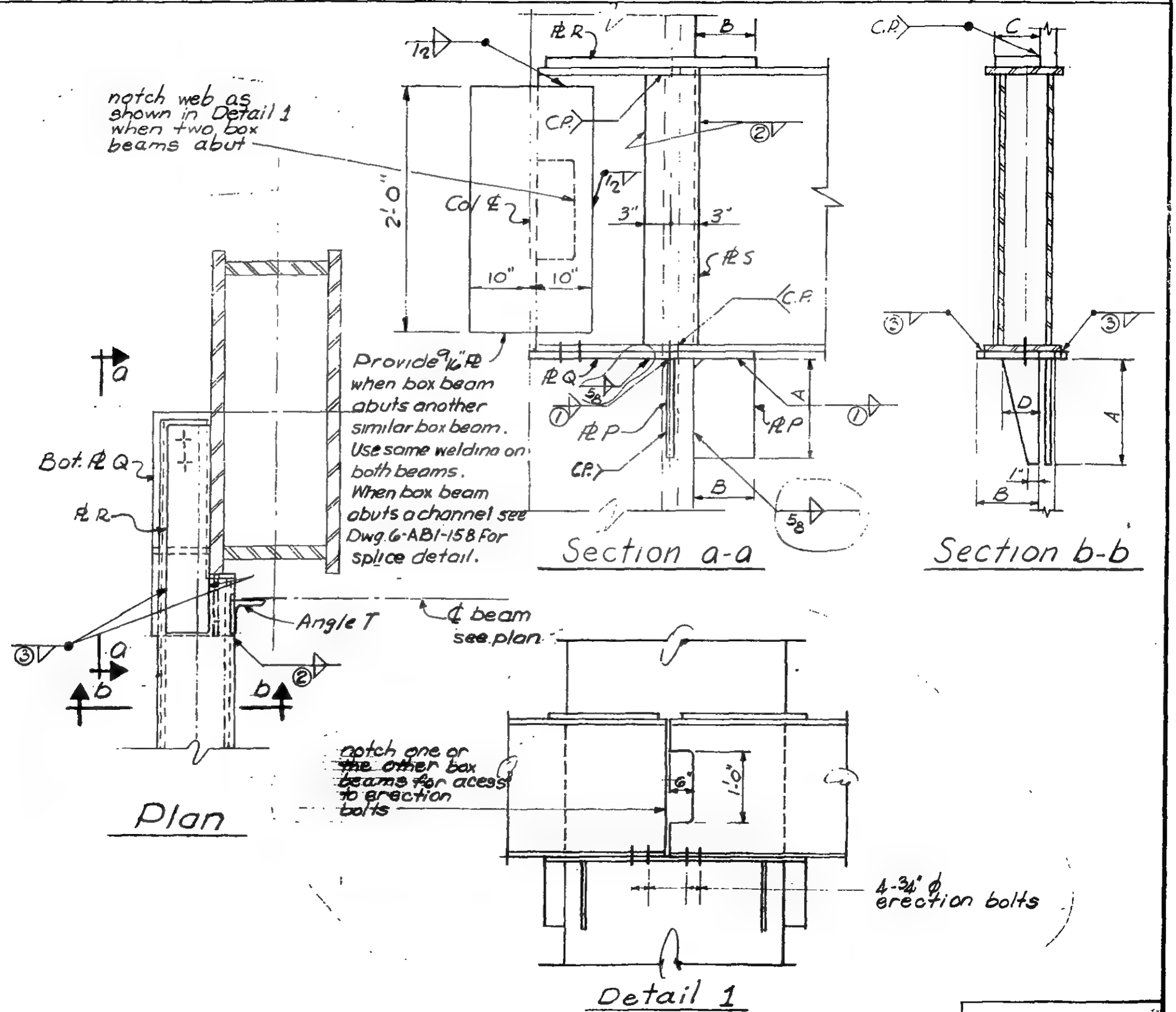

LICENSED PROFESSIONAL ENGINEER LESLIE E. ROBERTSON No. 34960 STATE OF NEW YORK

6-AB1-154

WORTHINGTON, SKILLING, HELLE & JACKSON — Civil & Structural Engineers

PROJECT THE WORLD TRADE CENTER | TITLE SCHEDULE FOR DETAIL 347A | DATE 7-28-67

REVISIONS

	347A
PLATES:	
P	7/8"
Q	7/8"
R	3/4"
S	7/8"
ANGLES	
T	CLIP 4x4x5/16x0'-6"
DIMENSIONS	
A	1'-0"
B	0'-7"
C	0'-5 1/4"
D	0'-4 1/2"
WELDS	
①	5/16
②	1/4
③	3/8

LICENSED PROFESSIONAL ENGINEER LESLIE E. ROBERTSON No. 34360 UNIVERSITY OF THE STATE OF NEW YORK

G-AB1-154.1

SKILLING - HELLE - CHRISTIANSEN - ROBERTSON Structural & Civil Engineers

PROJECT THE WORLD TRADE CENTER | TITLE CONNECTION DETAIL 347 B | DATE 10-5-57

REVISIONS

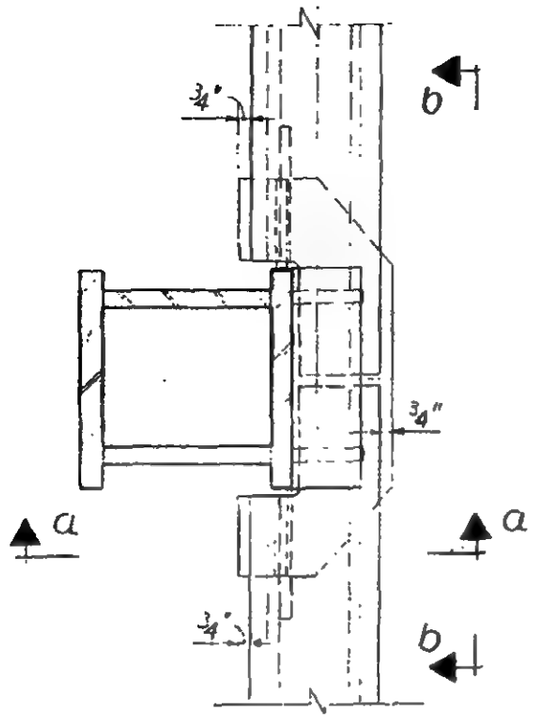

Plan

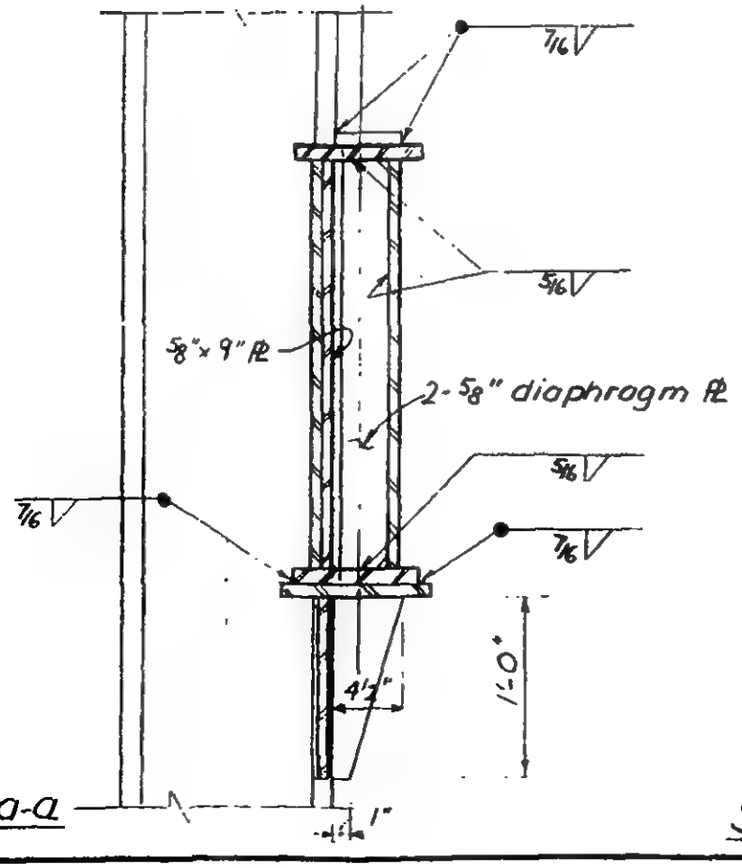

Section a-a

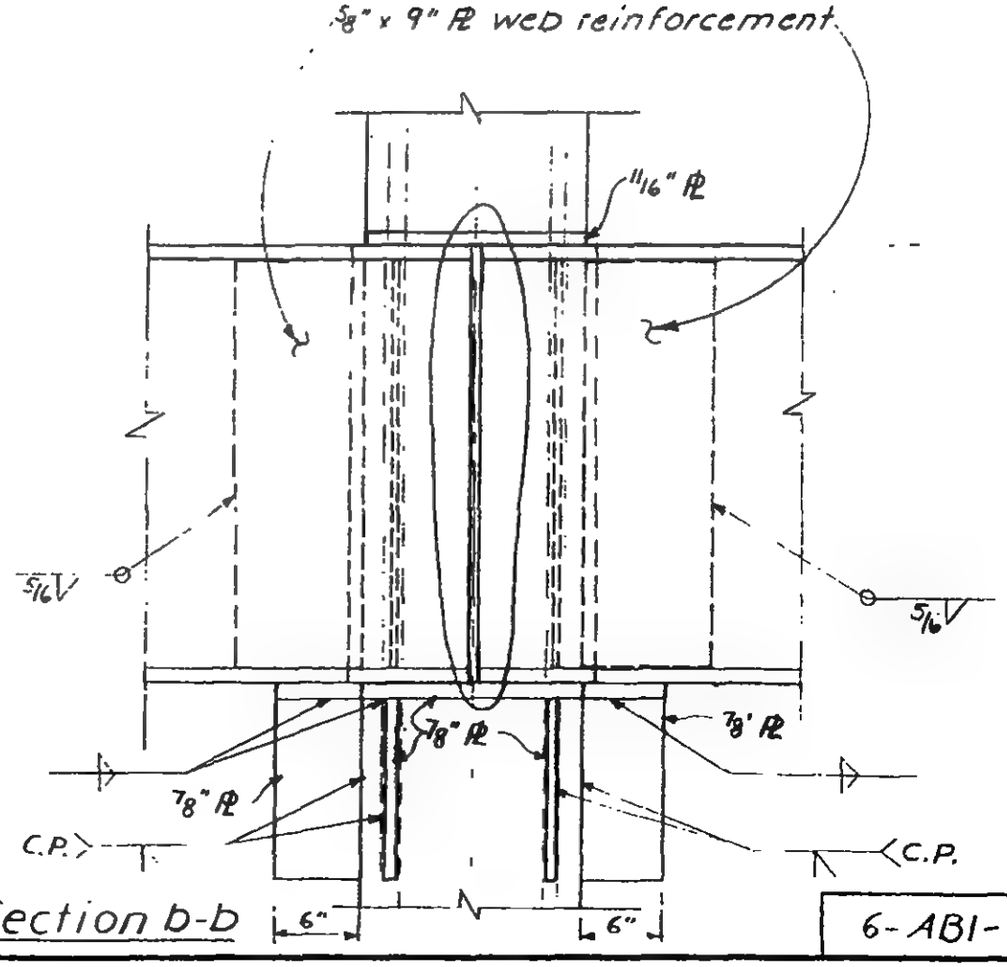

Section b-b

6-ABI-154.2

LICENSED PROFESSIONAL ENGINEER
LESLIE E. ROBERTSON
No. 34760
UNIVERSITY OF THE STATE OF NEW YORK

WORTHINGTON, SKILLING, HELLE & JACKSON — Civil & Structural Engineers

PROJECT THE WORLD TRADE CENTER | TITLE CONNECTION DETAIL 348 A & B | DATE 6-12-67

REVISIONS

6-30-67

7-28-67

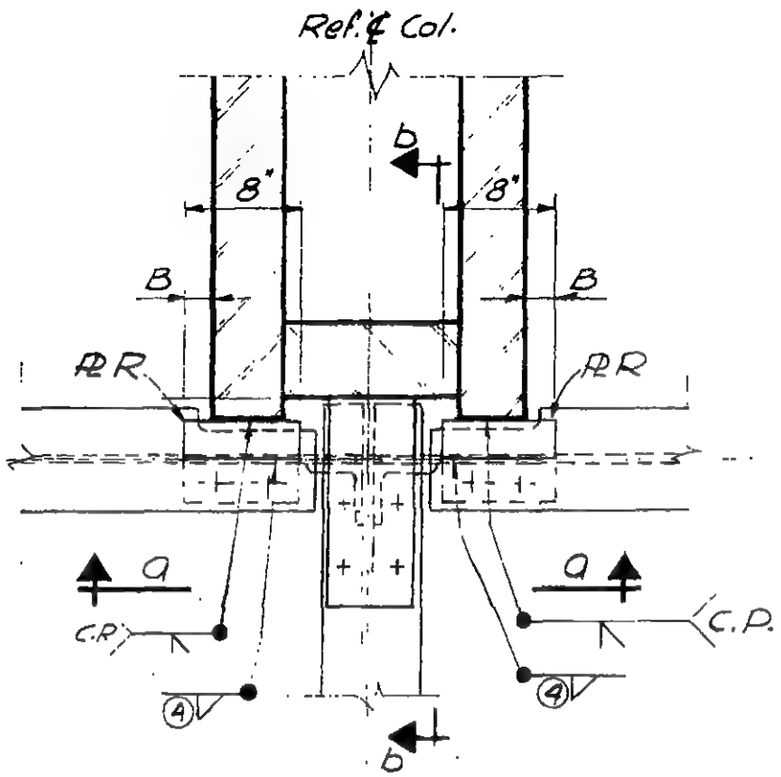

PLAN

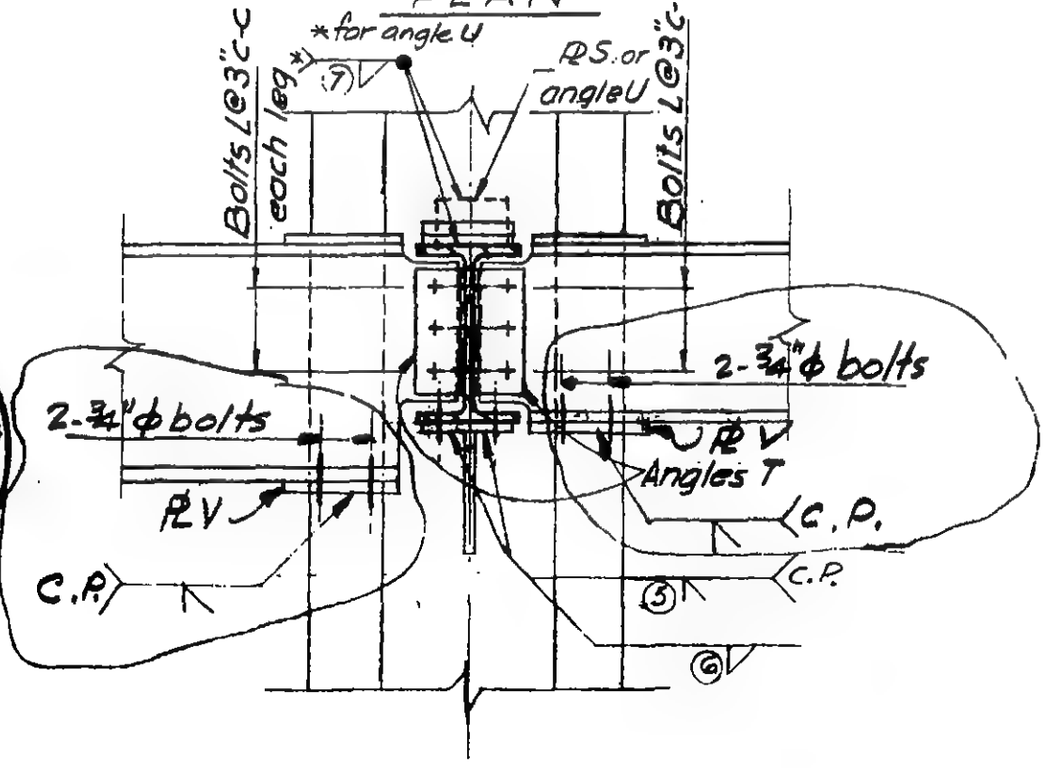

Section a-a

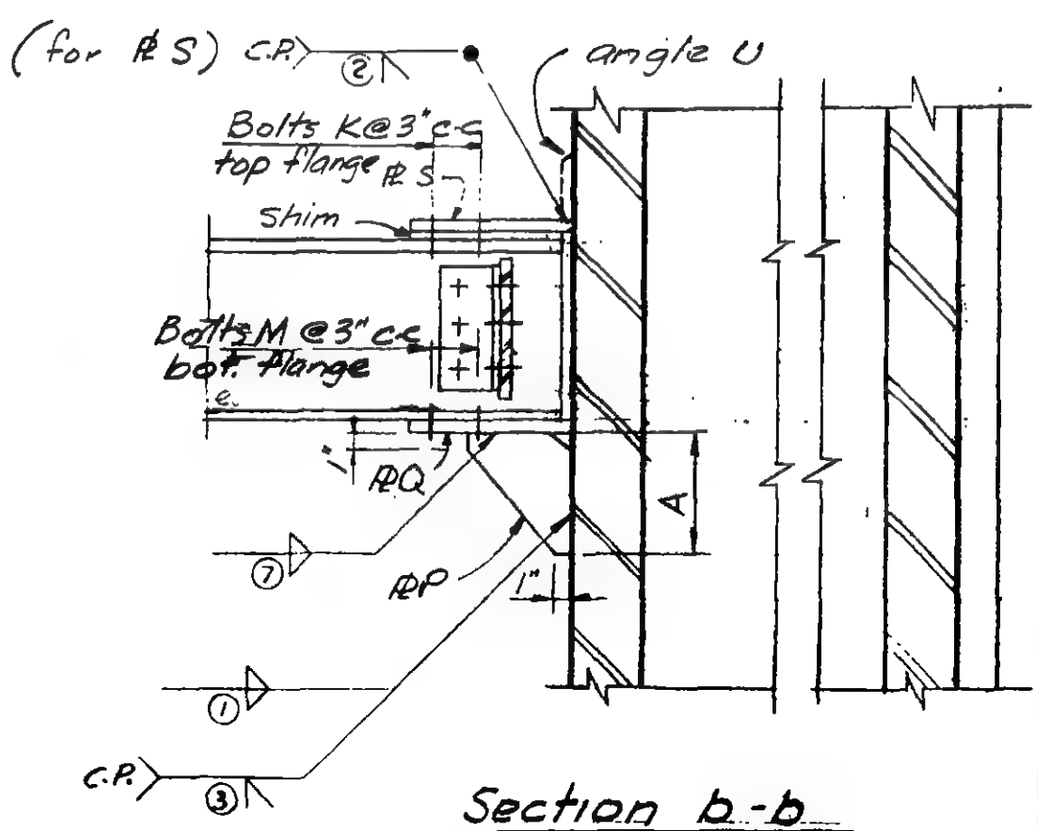

Section b-b

6-AB1-155

WORTHINGTON, SKILLING, HELLE & JACKSON — Civil & Structural Engineers

PROJECT THE WORLD TRADE CENTER | TITLE SCHEDULE FOR DETAIL 348 A & B | DATE 6-30-67

REVISIONS

7-28-67

	348 A	348 B
PLATES		
P	7" x 3/4"	8" x 3/4"
Q	9" x 1/2"	8" x 3/4"
R	2 1/2" x 7/8"	2 1/2" x 7/8"
S	9" x 1/2"	—
V	7/8"	7/8"
ANGLES		
T	4 x 4 x 3/8 x 0'-9"	4 x 4 x 3/8 x 0'-9"
U	—	4 x 4 x 5/16 x 0'-5"
DIMENSIONS		
A	1'-1"	1'-1"
B	0'-2"	0'-2"
BOLTS		
K	6 - 1" ϕ (A325)	—
L	3 - 7/8" ϕ (A325)	3 - 7/8" ϕ (A325)
M	6 - 1" ϕ (A325)	4 - 3/4" ϕ (A325)
WELDS		
②	C.P.	—
③	C.P.	C.P.
④	1/2	1/2
⑤	C.P.	C.P.
⑦	5/16	5/16

LICENSED PROFESSIONAL ENGINEER — LESLIE E. ROBERTSON — No. 34360 — UNIVERSITY OF THE STATE OF NEW YORK

6-AB1-155.1

SKILLING - HELLE - CHRISTIANSEN - ROBERTSON Structural & Civil Engineers

PROJECT THE WORLD TRADE CENTER | TITLE CONNECTION DETAIL 348C | DATE 2-9-68

REVISIONS

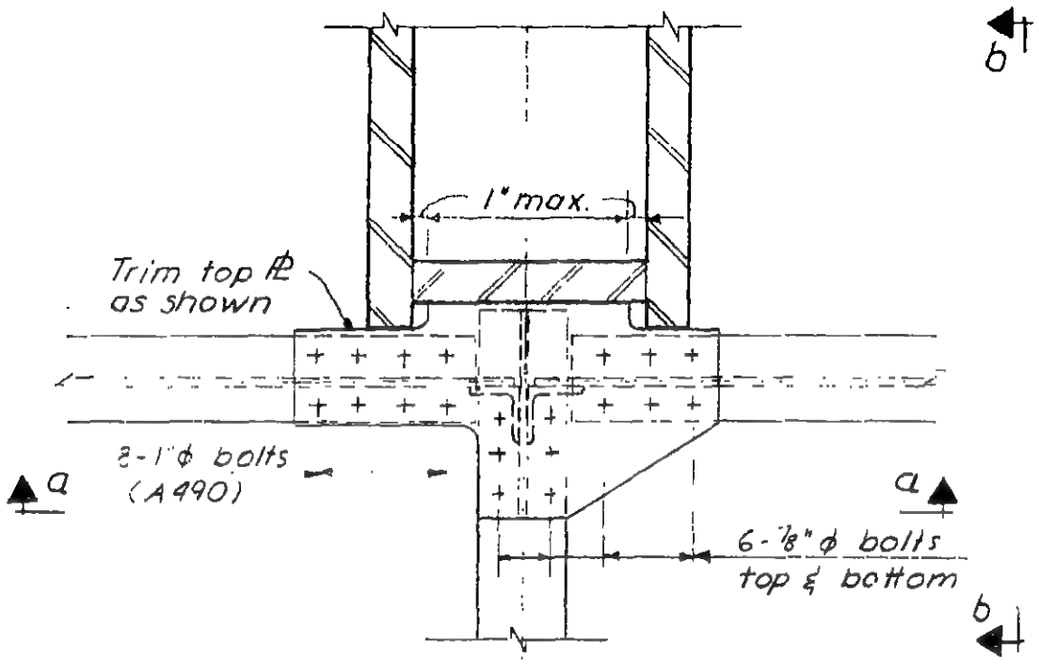

Plan

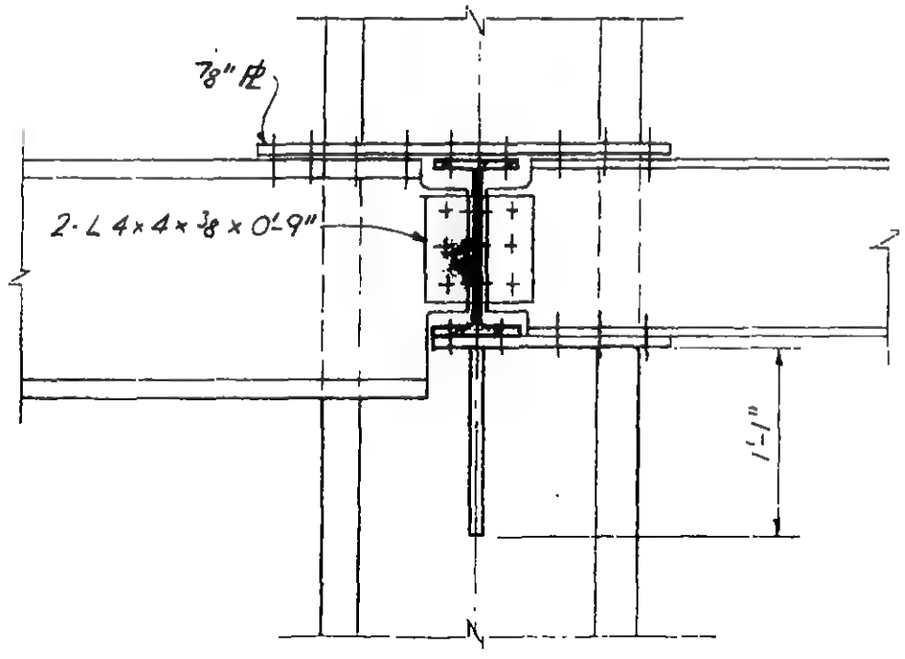

Section a-a

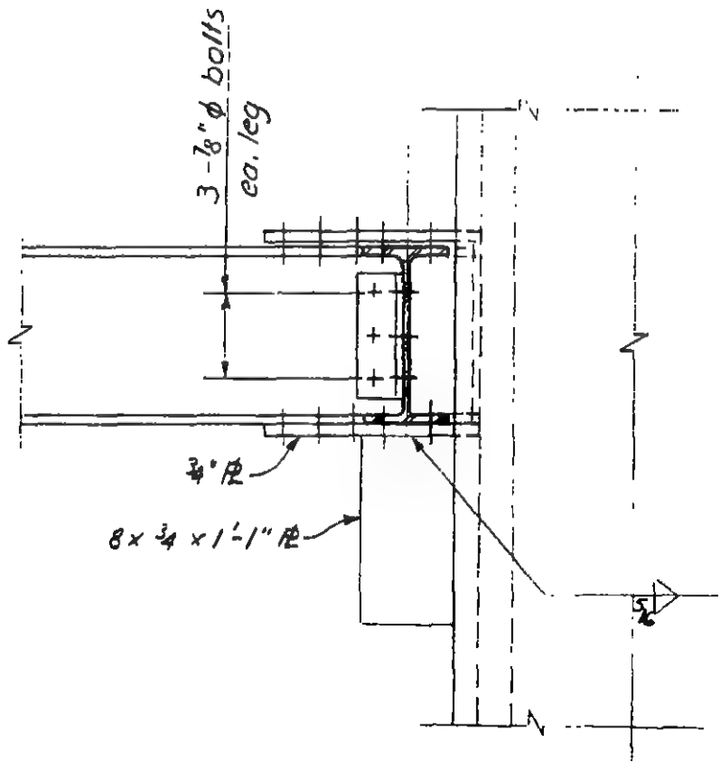

Section b-b

LICENSED PROFESSIONAL ENGINEER
LESLIE E. ROBERTSON
No. 34360
UNIVERSITY OF THE STATE OF NEW YORK

6-AB1-155.2

WORTHINGTON, SKILLING, HELLE & JACKSON — Civil & Structural Engineers

PROJECT THE WORLD TRADE CENTER | TITLE CONNECTION DETAIL 349 A | DATE 6-12-67

REVISIONS

6-30-67

7-28-67

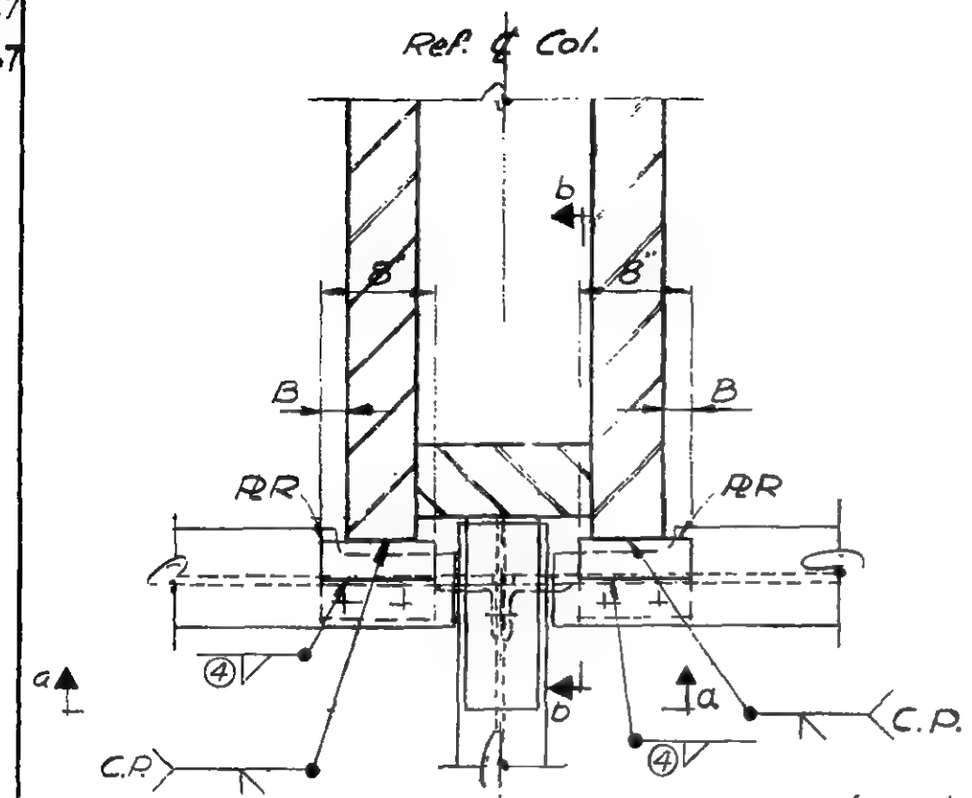

PLAN

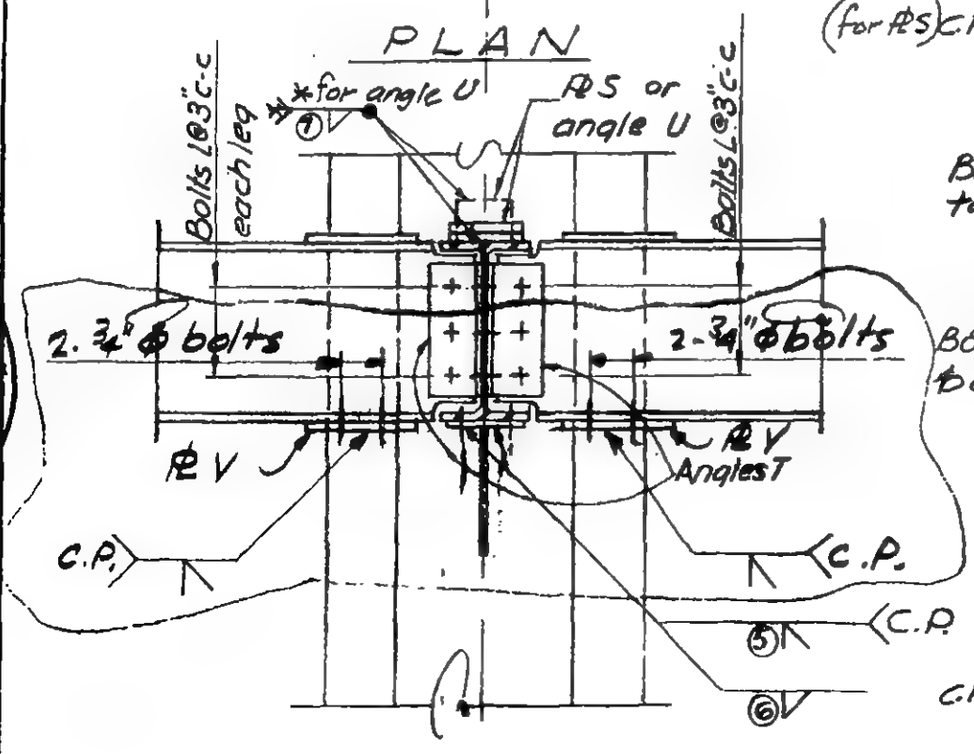

SECTION a-a

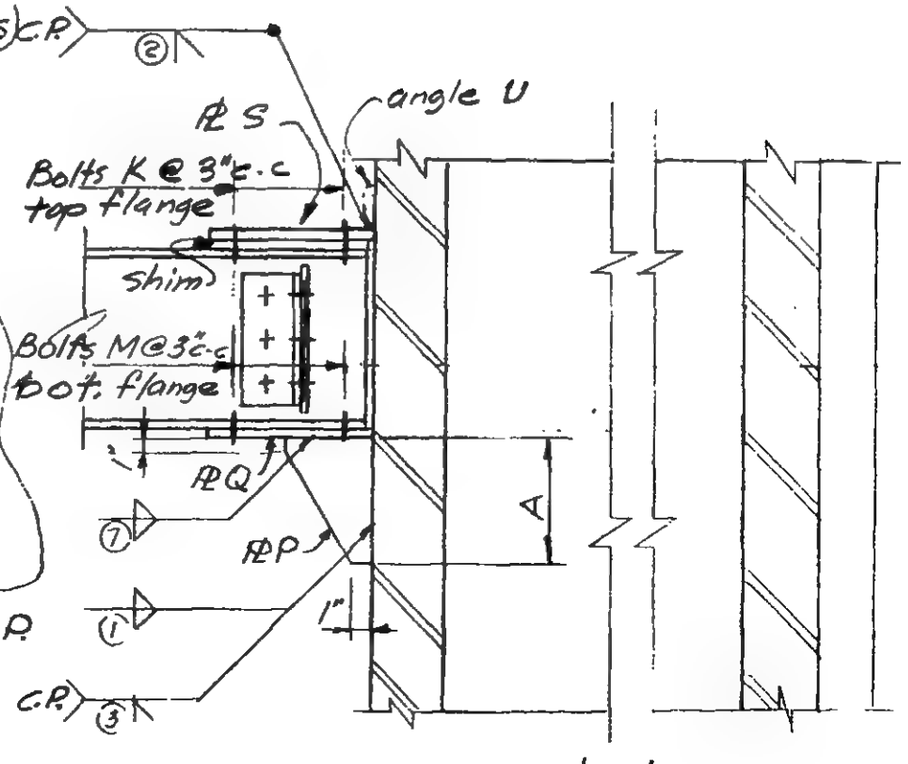

SECTION b-b

LICENSED PROFESSIONAL ENGINEER
LESLIE E. ROBERTSON
No. 34360
UNIVERSITY OF THE STATE OF NEW YORK

6-AB1-156

SKILLING - HELLE - CHRISTIANSEN - ROBERTSON Structural & Civil Engineers

PROJECT THE WORLD TRADE CENTER | TITLE SCHEDULE FOR DETAIL 349 A | DATE 6-30-67

REVISIONS

7-28-67

	349 A					
PLATES						
P	8 x 3/4					
Q	8 x 3/4					
R	2 1/2 x 7/8					
S	—					
V	7/8					
ANGLES						
T	4 x 4 x 3/8 x 0'-9"					
U	4 x 4 x 5/16 x 0'-5"					
DIMENSIONS						
A	1'-1"					
B	0'-2"					
BOLTS						
L	3-3/4"ϕ (A325)					
M	6-3/4"ϕ (A325)					
WELDS						
①	—					
②	—					
③	C.P.					
④	1/2					
⑤	C.P.					
⑦	5/16					

LICENSED PROFESSIONAL ENGINEER
LESLIE E. ROBERTSON
No. 34360
UNIVERSITY OF THE STATE OF NEW YORK

6-ABI-156.1

SKILLING - HELLE - CHRISTIANSEN - ROBERTSON Structural & Civil Engineers

PROJECT THE WORLD TRADE CENTER | TITLE CONNECTION DETAIL 349B | DATE 2-9-68

REVISIONS

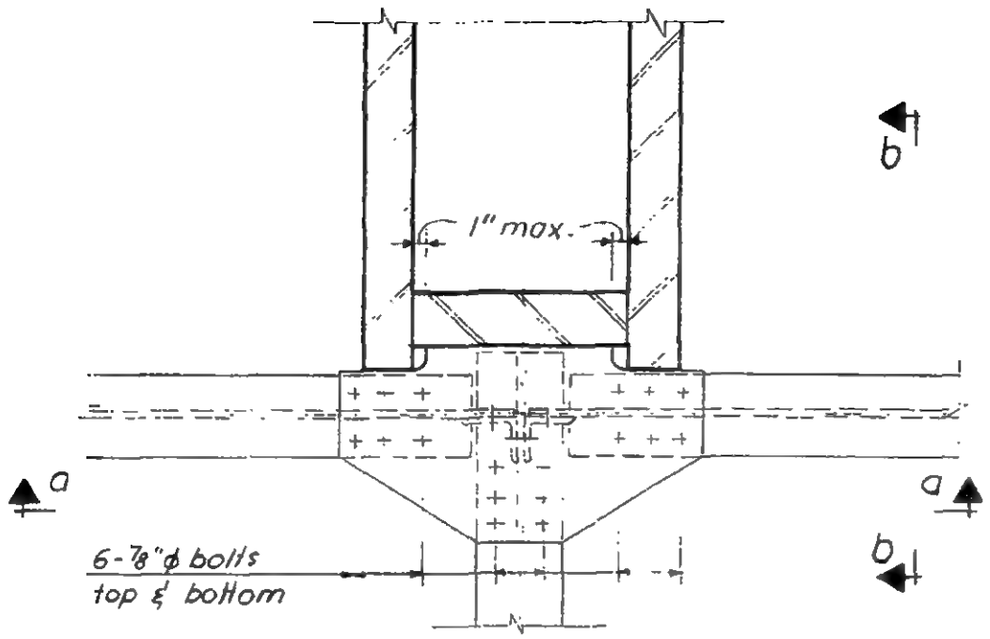

Plan

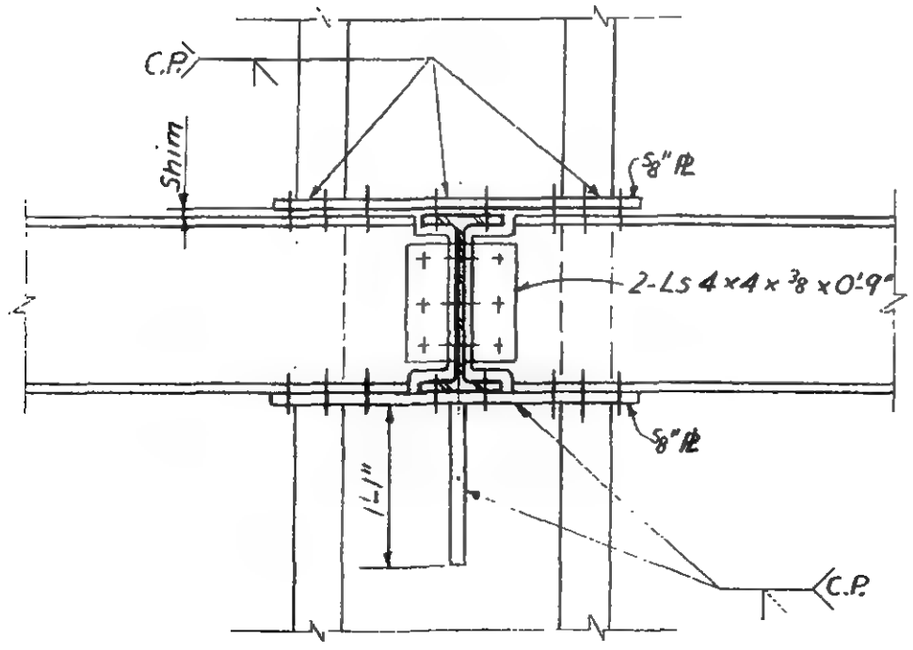

Section a-a

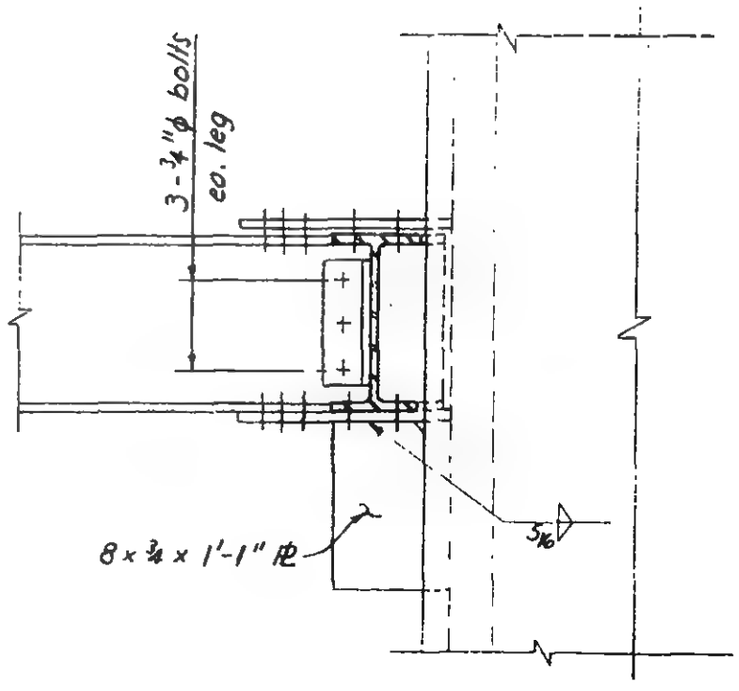

Section b-b

LICENSED PROFESSIONAL ENGINEER
LESLIE E. ROBERTSON
No. 34360
UNIVERSITY OF THE STATE OF NEW YORK

6-ABI-156.2

SKILLING - HELLE - CHRISTIANSEN - ROBERTSON Structural & Civil Engineers

PROJECT THE WORLD TRADE CENTER | TITLE CONNECTION DETAIL 349C | DATE 3-11-68

REVISIONS

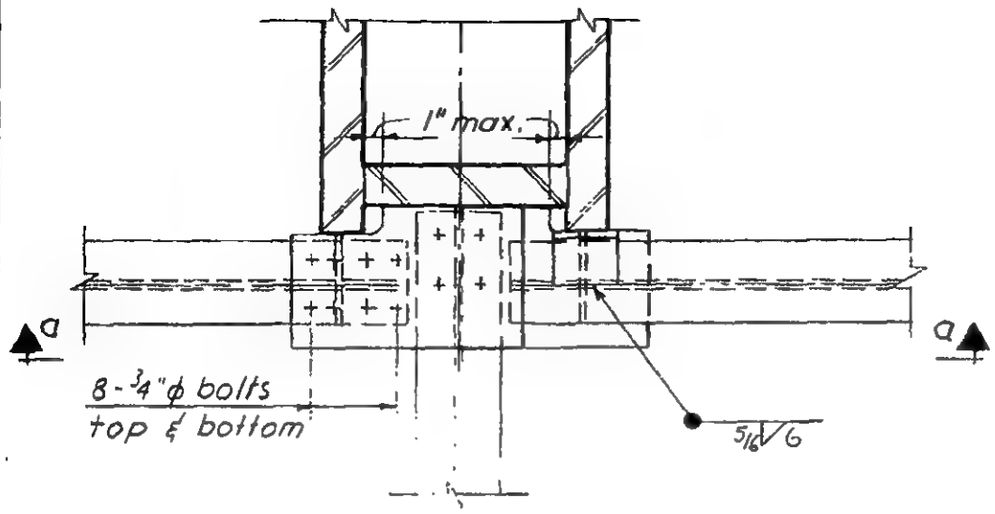

Plan

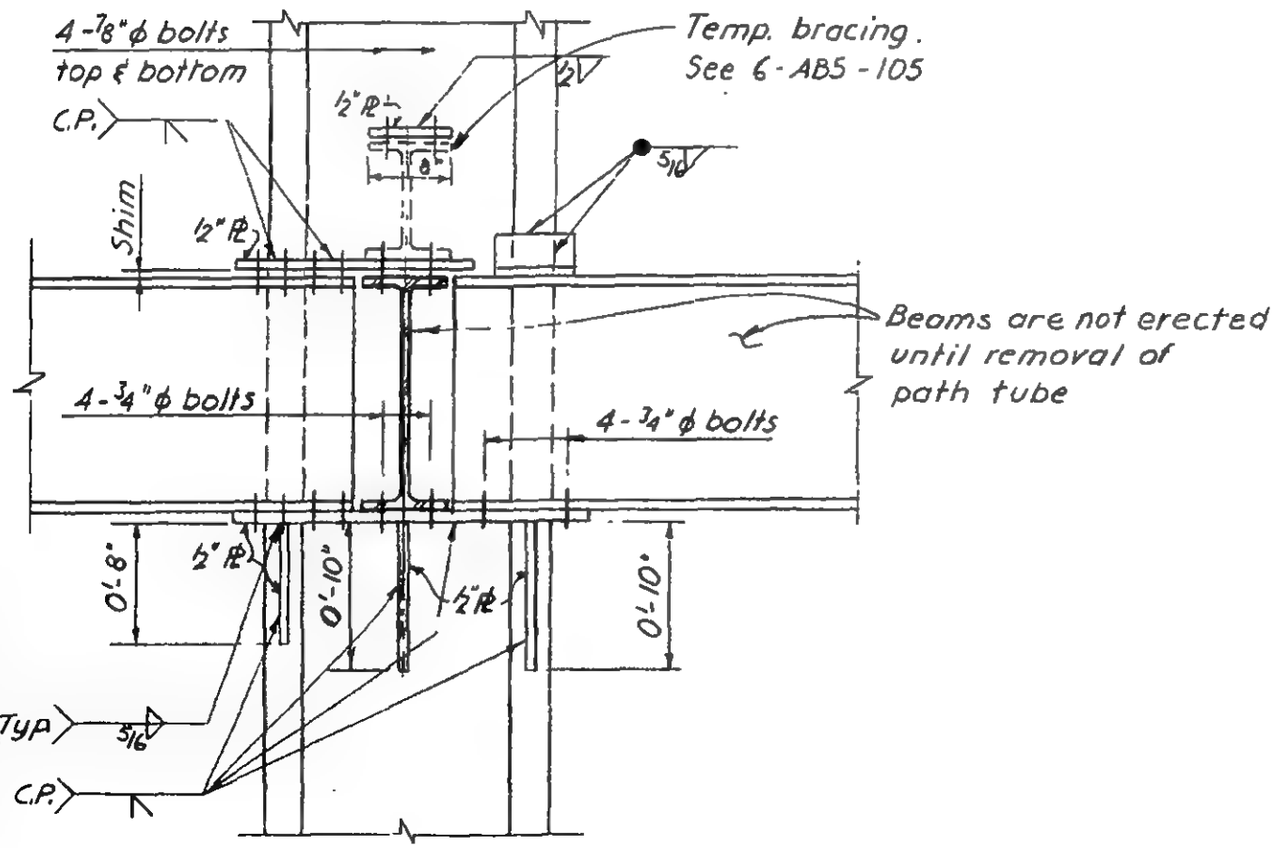

Section a-a

LICENSED PROFESSIONAL ENGINEER
LESLIE E. ROBERTSON
NO. 34360
UNIVERSITY OF THE STATE OF NEW YORK

6-AB1-156.3

WORTHINGTON, SKILLING, HELLE & JACKSON — Civil & Structural Engineers

PROJECT THE WORLD TRADE CENTER | TITLE CONNECTION DETAIL 350C | DATE 6-12-67

REVISIONS

7-28-67

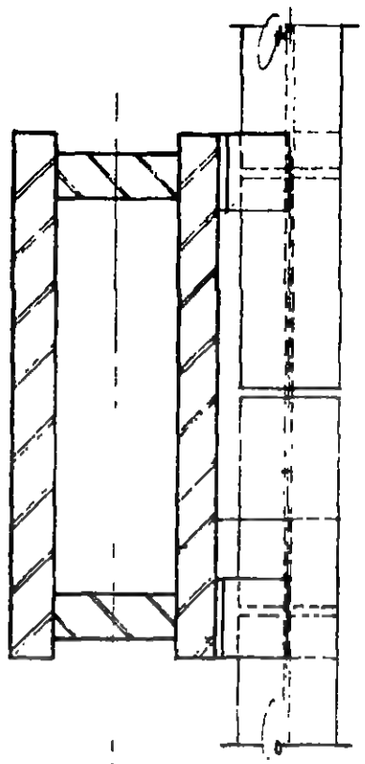

PLAN

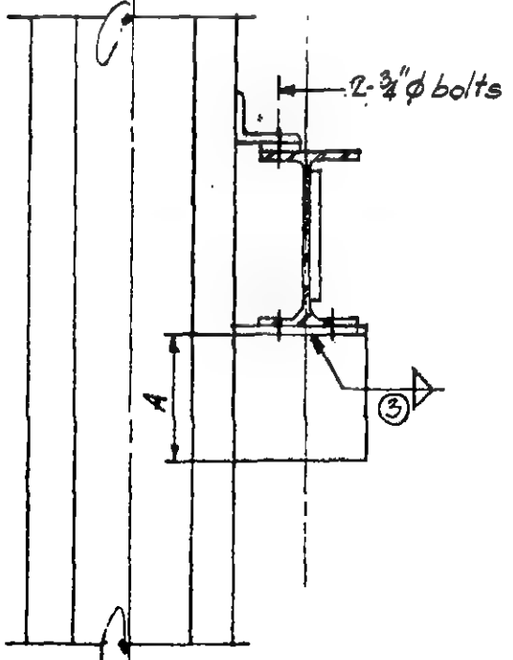

SECTION a-a

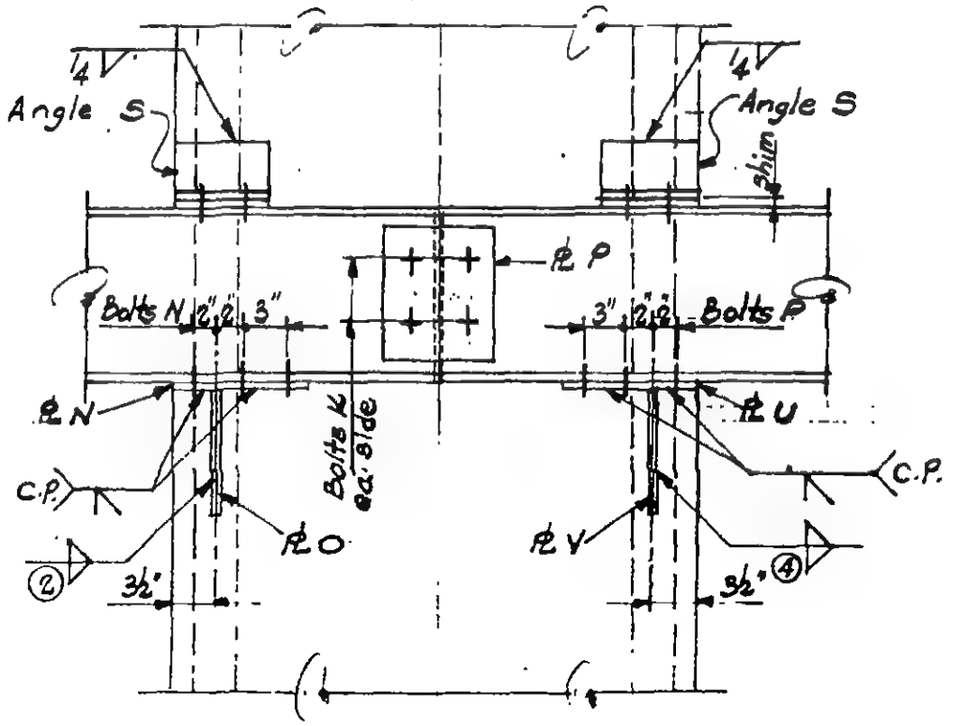

SECTION b-b

LICENSED PROFESSIONAL ENGINEER
LESLIE E. ROBERTSON
No. 34360
UNIVERSITY OF THE STATE OF NEW YORK

G-AB1-157

WORTHINGTON, SKILLING, HELLE & JACKSON — Civil & Structural Engineers

PROJECT THE WORLD TRADE CENTER | TITLE CONNECTION DETAIL 350 B | DATE 7-5-67

REVISIONS

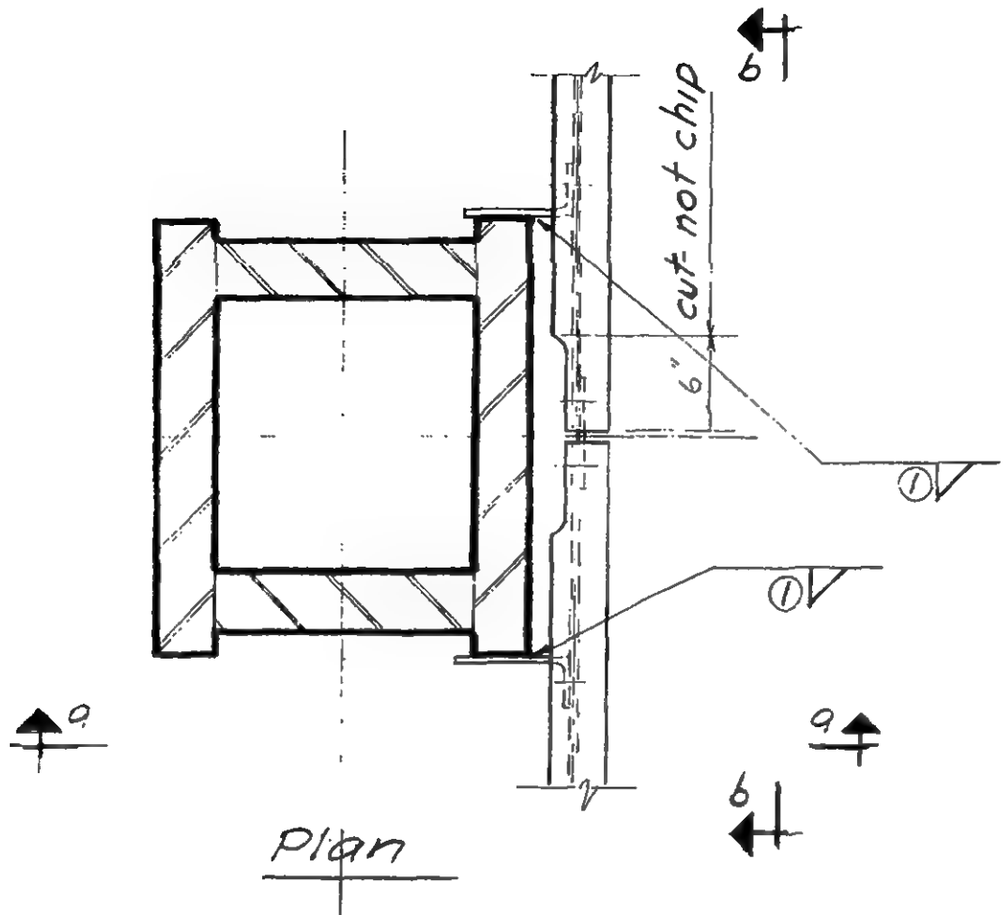

Plan

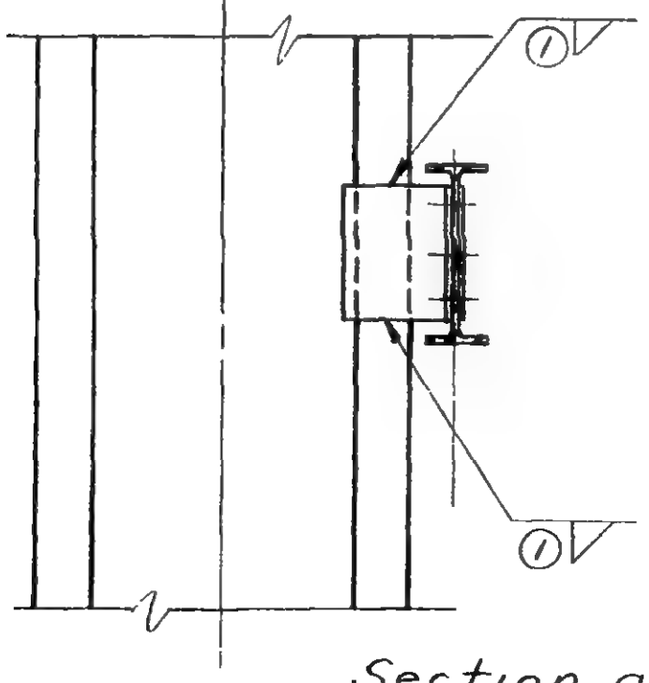

Section a-a

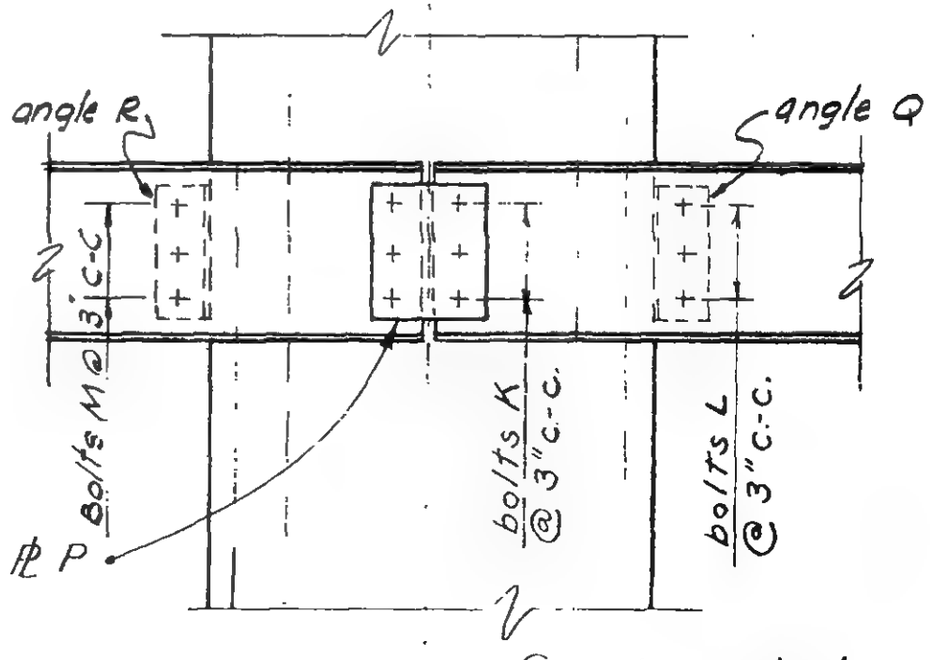

Section b-b

LICENSED PROFESSIONAL ENGINEER
LESLIE E. ROBERTSON
No. 34360
STATE OF NEW YORK

6-AB1-157.1

SKILLING - HELLE - CHRISTIANSEN - ROBERTSON Structural & Civil Engineers

PROJECT THE WORLD TRADE CENTER | TITLE SCHEDULE FOR DETAIL 350 A, B, C, D | DATE 7-5-67

REVISIONS

7-17-68

REF. DWGS.	6-AB1-157.3	6-AB1-157.1	6-AB1-157	6-AB1-157.4	6-AB1-157.4	6-AB1-157.4
	350 A	350 B	350 C	350 D	350 E	350 F
PLATES						
M	1/2"	—	—	—	—	—
N	1/2"	—	1/2"	—	—	—
O	1/2"	—	1/2"	—	—	—
P	3/8"	3/8"	3/8"	—	—	—
U	—	—	1/2"	1/2	1/2	—
V	—	—	1/2"	1/2	1/2	—
ANGLES						
Q	7 x 4 x 1/2 x 0'-9"	7 x 4 x 1/2 x 0'-9"	—	—		
R	4 x 3 1/2 x 5/16 x 0'-8 1/2"	7 x 4 x 1/2 x 0'-9"	—	—	6 x 6 x 3/8 x 0'-8 1/2"	6 x 6 x 3/8 x 0'-8 1/2"
S	5 x 3 1/2 x 5/16 x 0'-6"	—	6 x 4 x 5/16 x 0'-6"	6 x 4 x 5/16 x 0'-6"	6 x 4 x 5/16 x 0'-6"	—
DIMENSIONS						
A	1'-0"	—	1'-0"	1'-0"	1'-0"	—
BOLTS						
K	3 - 3/4" ϕ	3 - 3/4" ϕ	3 - 3/4" ϕ	2 - 3/4" ϕ	2 - 3/4" ϕ	—
L	3 - 3/4" ϕ	3 - 3/4" ϕ	—	—	6 - 3/4" ϕ	6 - 3/4" ϕ
M	3 - 3/4" ϕ	3 - 3/4" ϕ	—	—	—	—
N	2 - 3/4" ϕ	—	6 - 3/4" ϕ	4 - 7/8" ϕ	4 - 7/8" ϕ	—
P	—	—	6 - 3/4" ϕ	—	—	—
WELDS						
1	3/8	3/8	—	—	—	—
2	1/2	—	1/2	1/2	1/2	—
3	5/16	—	5/16	5/16	5/16	—
4	—	—	1/2	—	—	—

6-AB1-157.2

LICENSED PROFESSIONAL ENGINEER LESLIE E. ROBERTSON No. 34260 UNIVERSITY OF THE STATE OF NEW YORK

WORTHINGTON, SKILLING, HELLE & JACKSON — Civil & Structural Engineers

PROJECT THE WORLD TRADE CENTER | TITLE CONNECTION DETAIL 350A | DATE 7-28-67

REVISIONS

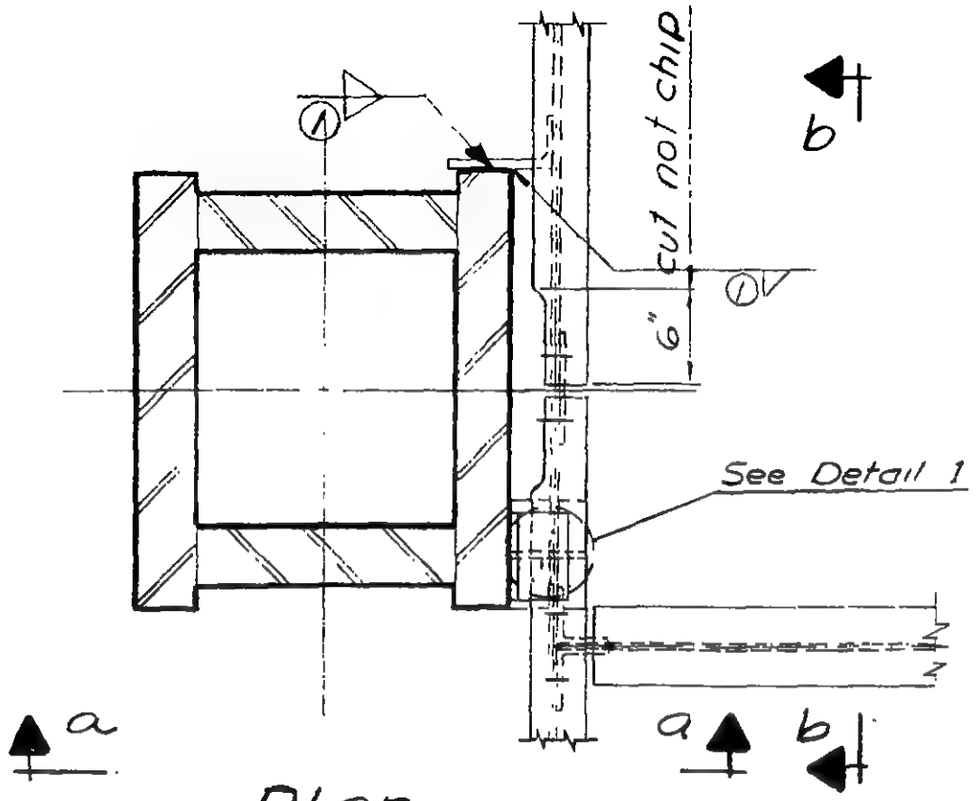

Plan

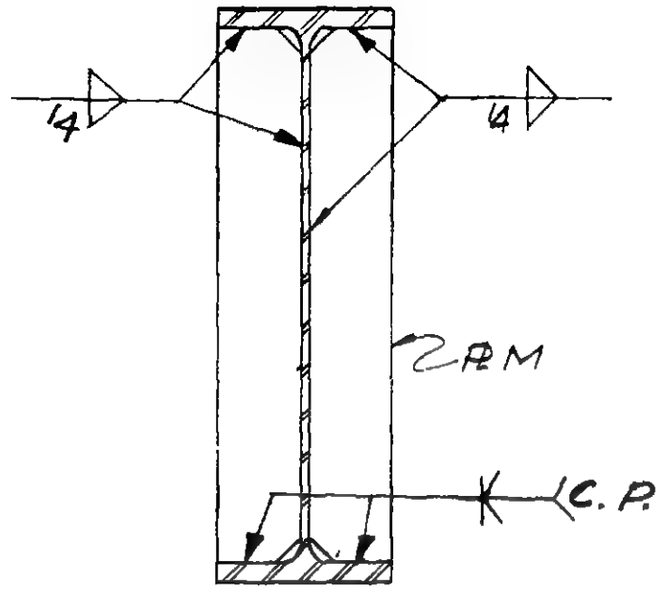

Detail 1

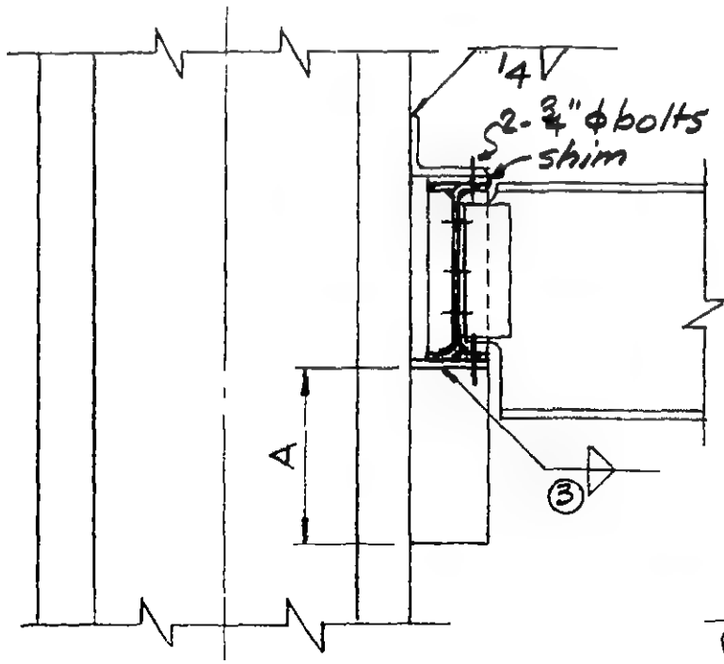

Section a-a

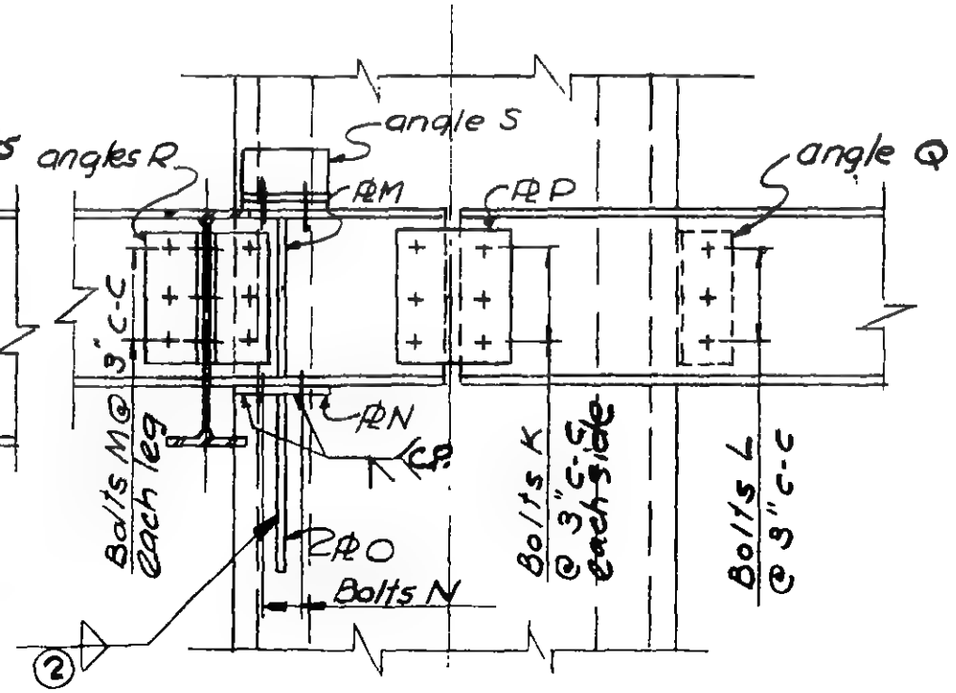

Section b-b

LICENSED PROFESSIONAL ENGINEER — LESLIE E. ROBERTSON — No. 34360 — UNIVERSITY OF THE STATE OF NEW YORK

6-ABI-157.3

SKILLING - HELLE - CHRISTIANSEN - ROBERTSON Structural & Civil Engineers

PROJECT THE WORLD TRADE CENTER | TITLE CONNECTION DETAIL 350D,E,F | DATE 7-17-68

REVISIONS

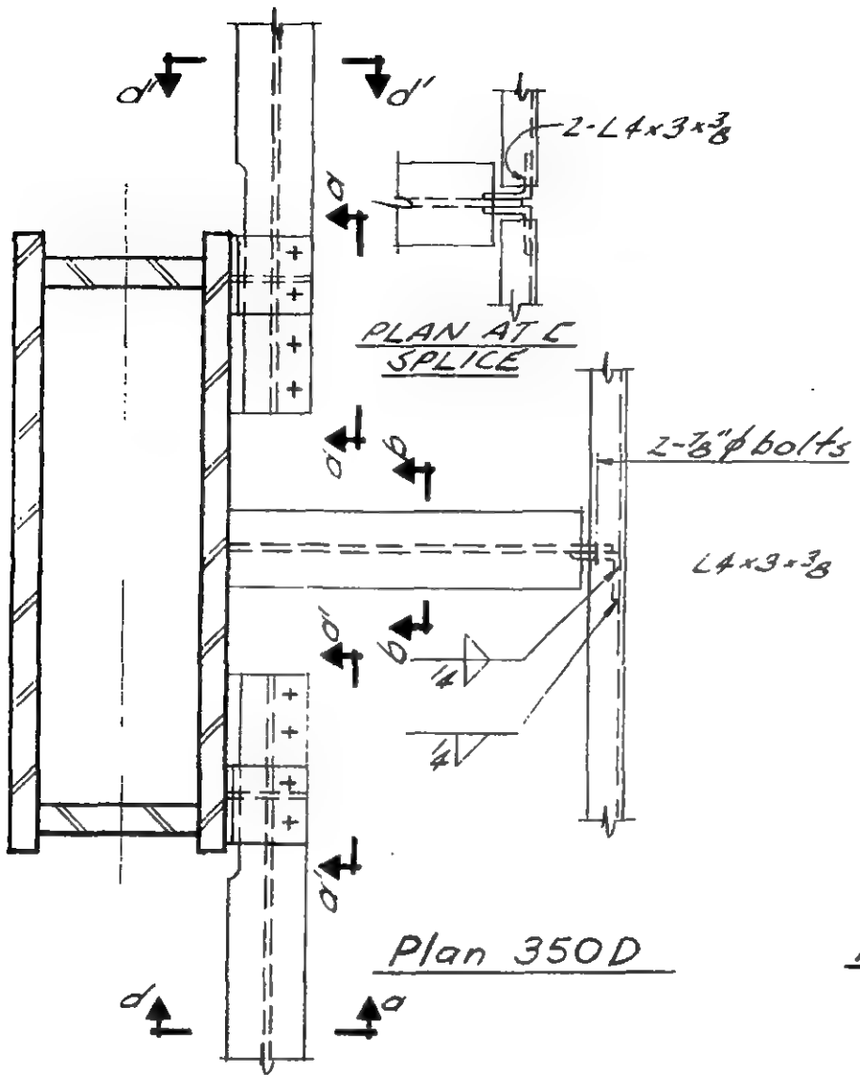

Plan 350D

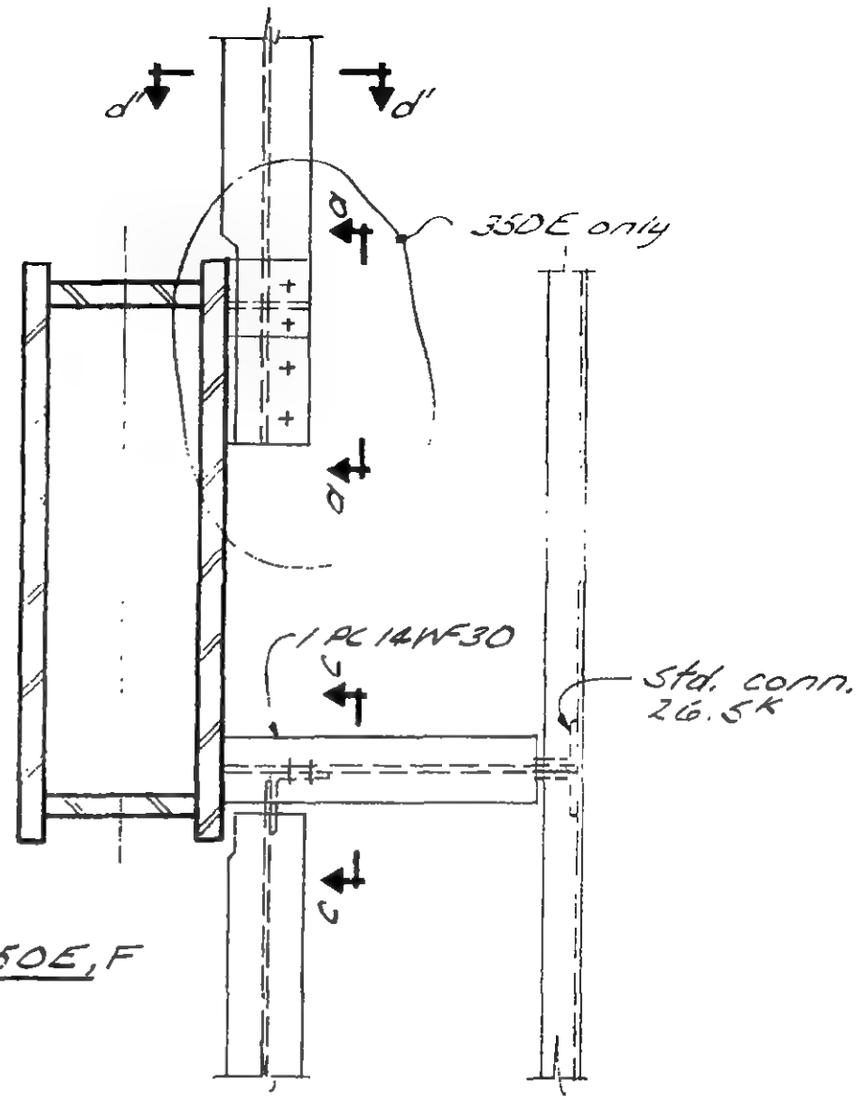

Plan 350E,F

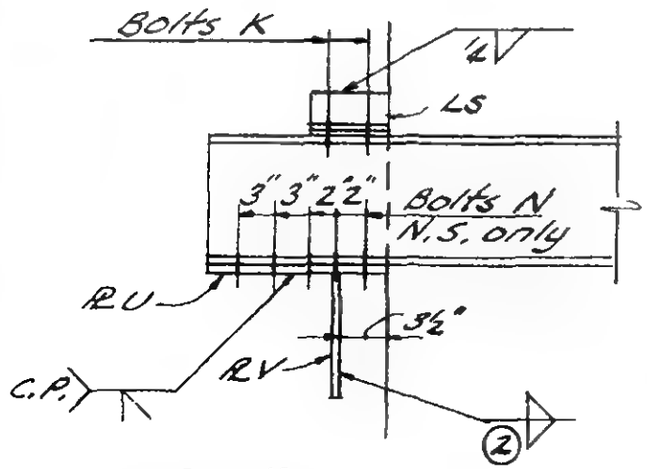

Section a-a
Section a'-a' similar

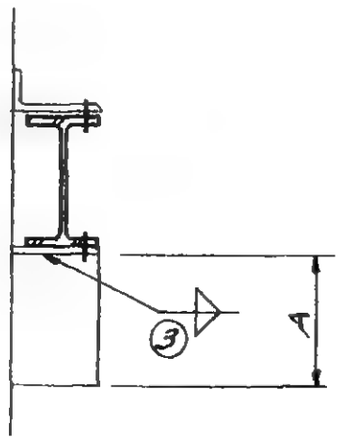

Section d-d
Section d'-d' similar

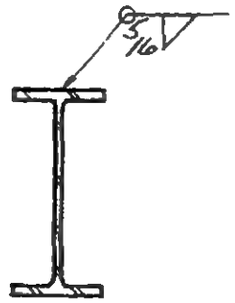

Section b-b

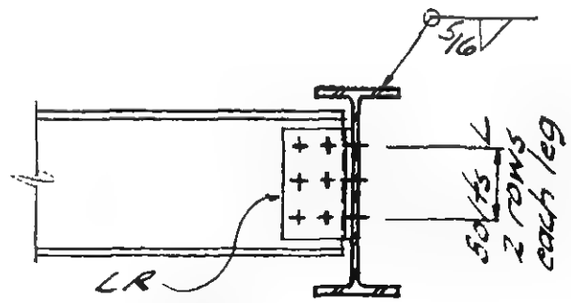

Section c-c

6-ABI-157.4

WORTHINGTON, SKILLING, HELLE & JACKSON — Civil & Structural Engineers

PROJECT: THE WORLD TRADE CENTER | TITLE: CONNECTION DETAIL 351 A, B & C | DATE: 5-1-67

REVISIONS

7-28-67
8-9-67
9-15-67
10-3-67
11-10-67

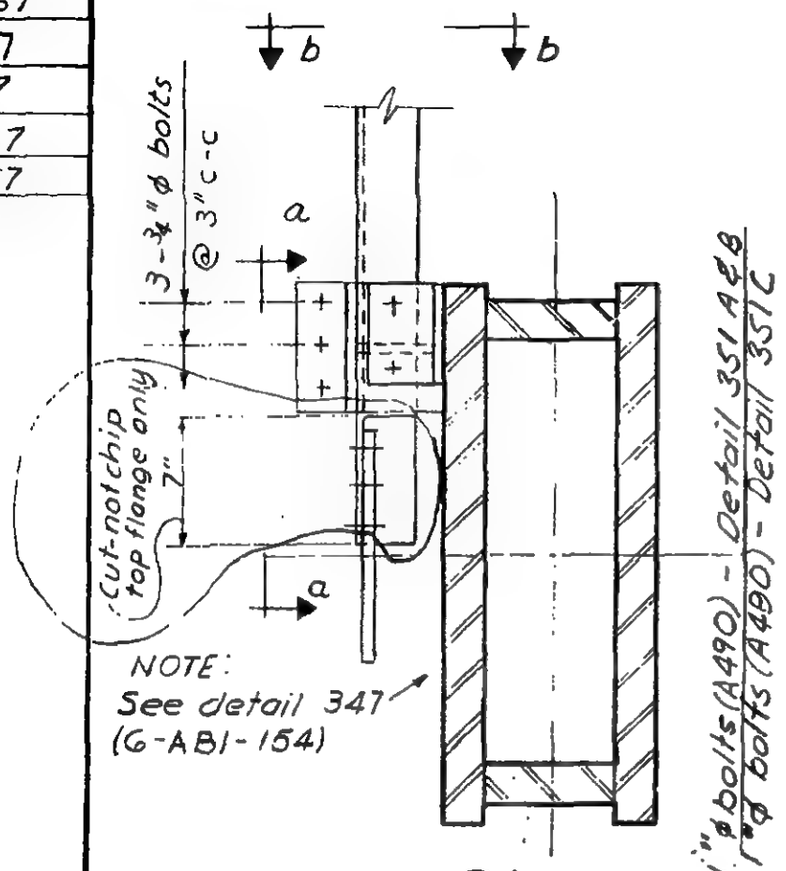

Plan

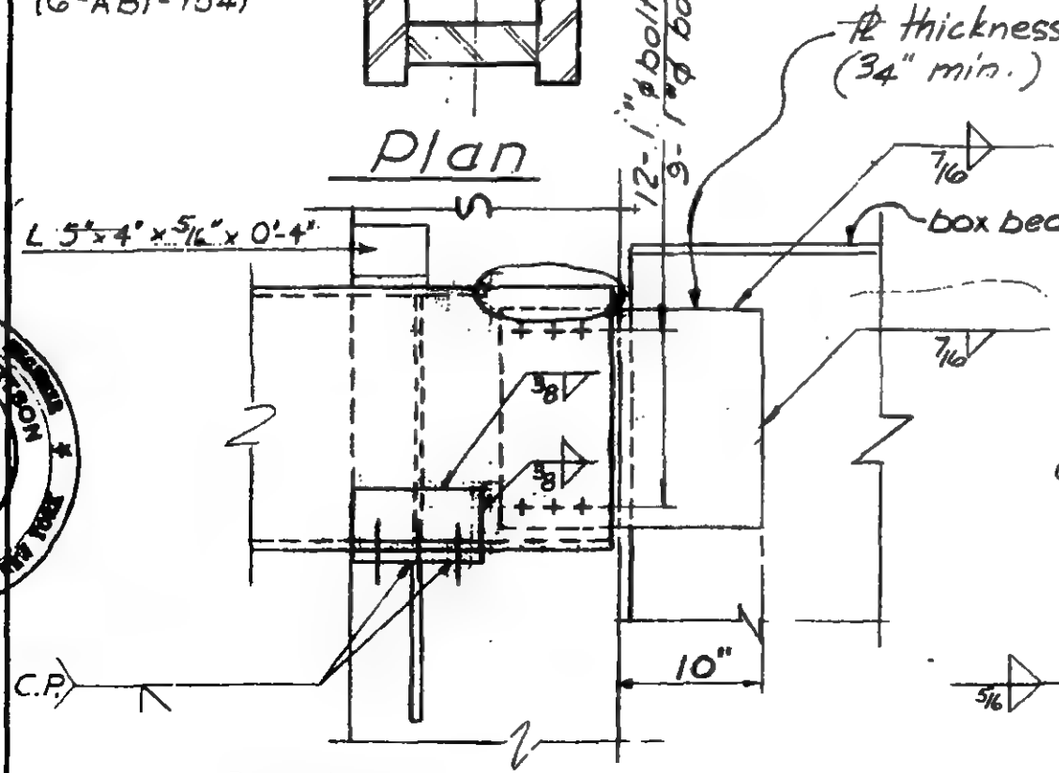

Section a-a

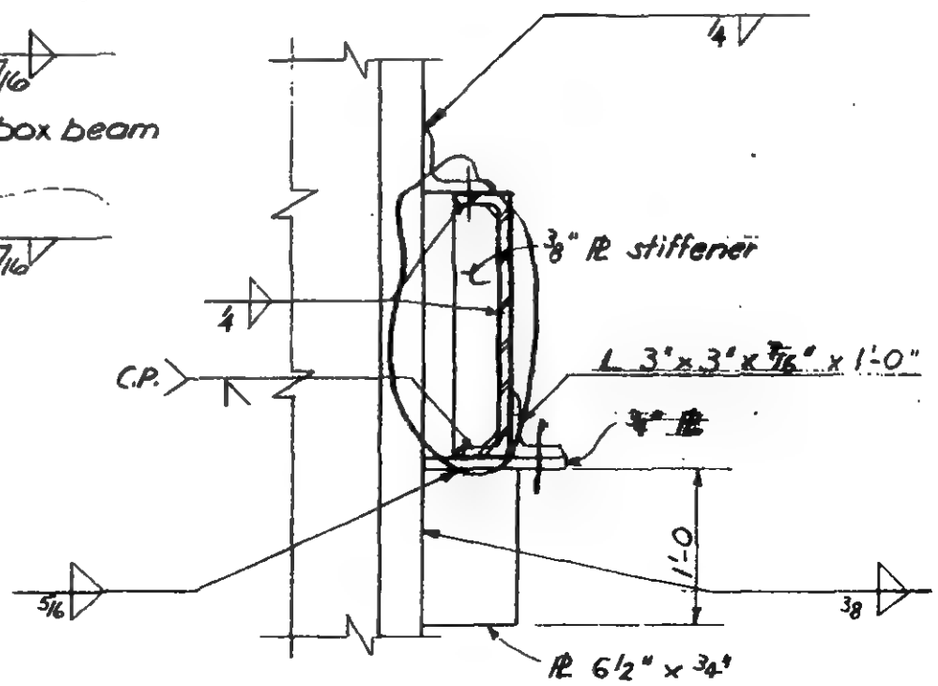

Section b-b

LESLIE E. ROBERTSON
No. 34360
LICENSED PROFESSIONAL ENGINEER
UNIVERSITY OF THE STATE OF NEW YORK

G-ABI-10[illegible]

WORTHINGTON, SKILLING, HELLE & JACKSON — Civil & Structural Engineers

PROJECT THE WORLD TRADE CENTER | TITLE CONNECTION DETAIL 352 A & B | DATE 5-9-67

REVISIONS

7-28-67

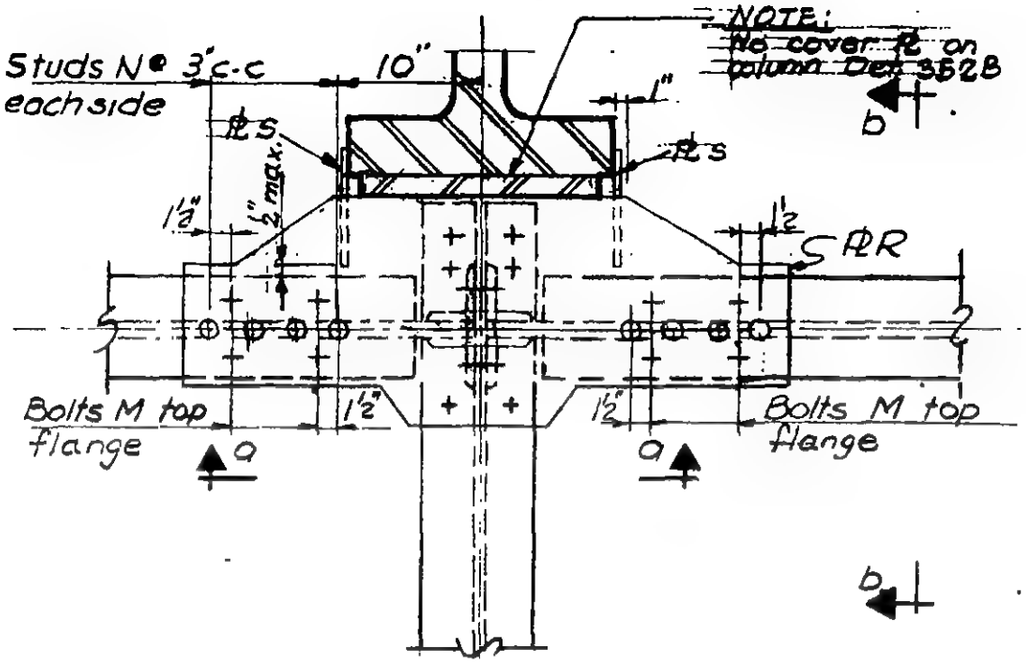

PLAN

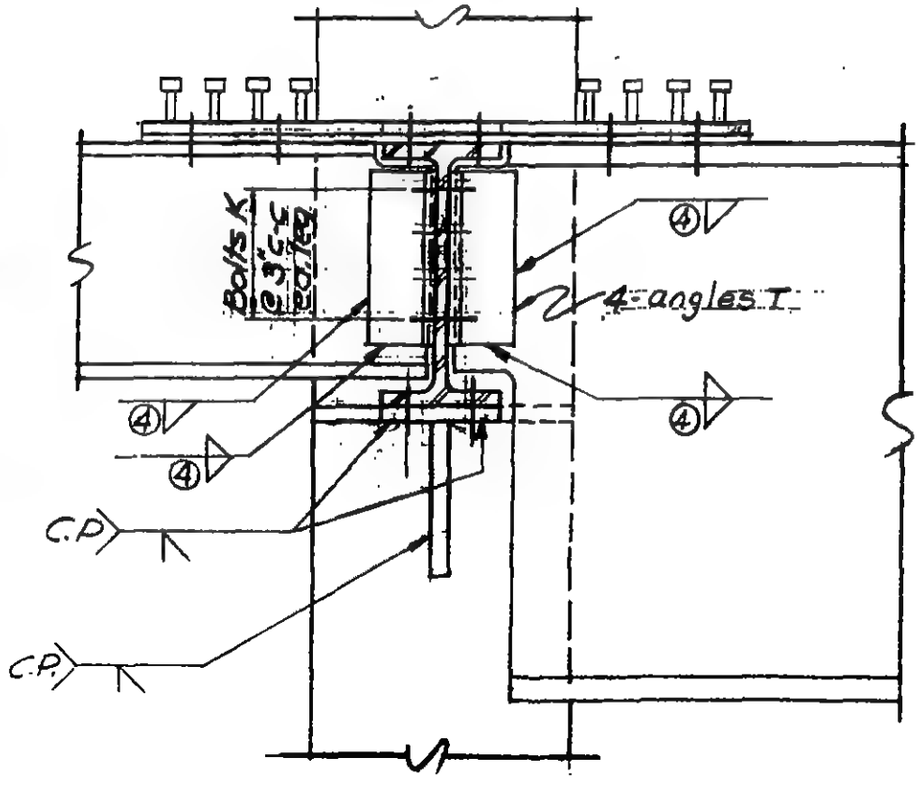

Section a-a

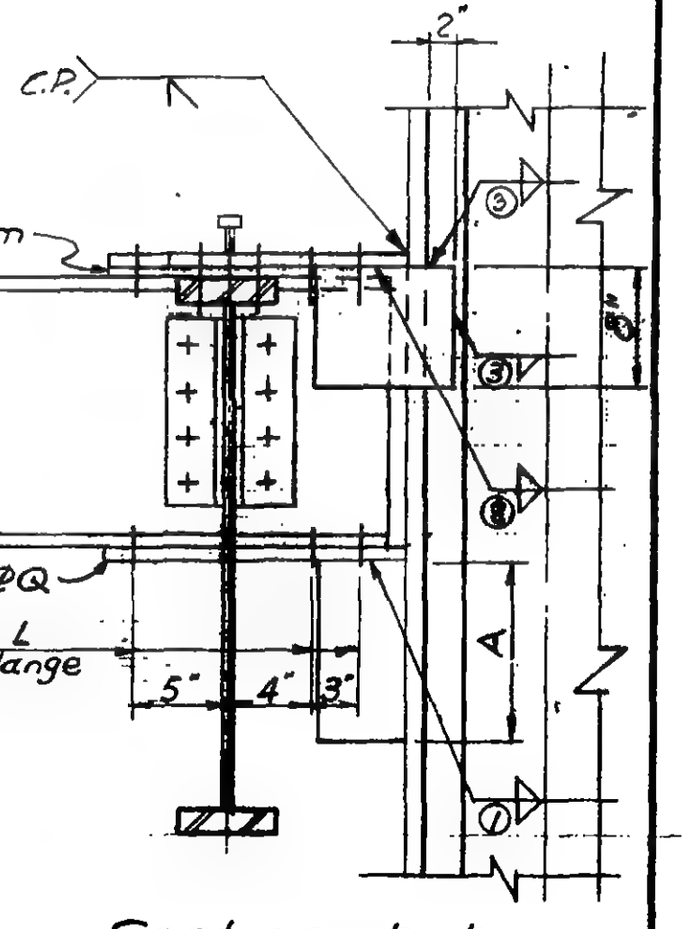

Section b-b

6-ABI-159

WORTHINGTON, SKILLING, HELLE & JACKSON — Civil & Structural Engineers

PROJECT: THE WORLD TRADE CENTER | TITLE: SCHEDULE FOR DETAIL 352 A & B | DATE: 7-28-67

REVISIONS

	352 A	352 B
PLATES		
P	6" x 5/8"	6" x 5/8"
Q	7½" x 5/8"	7½" x 5/8"
R	5/8"	5/8"
S	5/16"	—
ANGLES		
T	4" x 3½" x 3/8"	4 x 3½ x 3/8
DIMENSIONS		
A	1'-0"	1'-0"
BOLTS		
K	4 - ¾" ϕ	4 - ¾" ϕ
L	6 - 1⅛" ϕ	6 - 1⅛" ϕ
M	4 - ¾" ϕ	4 - ¾" ϕ
STUDS		
N	4 - ¾" ϕ x 0'-3"	4 - ¾" ϕ x 0'-3"
WELDS		
①	3/8	3/8
②	5/16	—
③	5/16	—
④	5/16	5/16

LESLIE E. ROBERTSON — LICENSED PROFESSIONAL ENGINEER — No. 34360 — UNIVERSITY OF THE STATE OF NEW YORK

G-ABI-159.1

WORTHINGTON, SKILLING, HELLE & JACKSON — Civil & Structural Engineers

PROJECT THE WORLD TRADE CENTER | TITLE CONNECTION DETAIL 353 A THRU G | DATE 6-12-67

REVISIONS
6-30-67
7-28-67

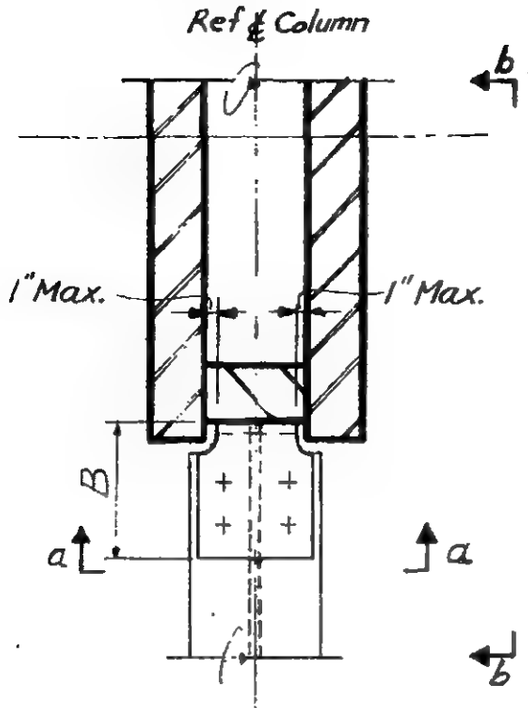

PLAN

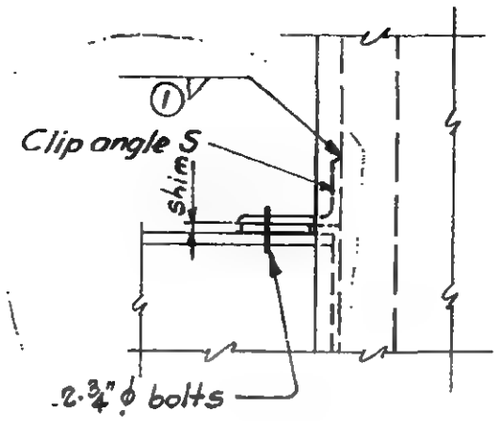

Detail where clip angle S replaces top ℄ R

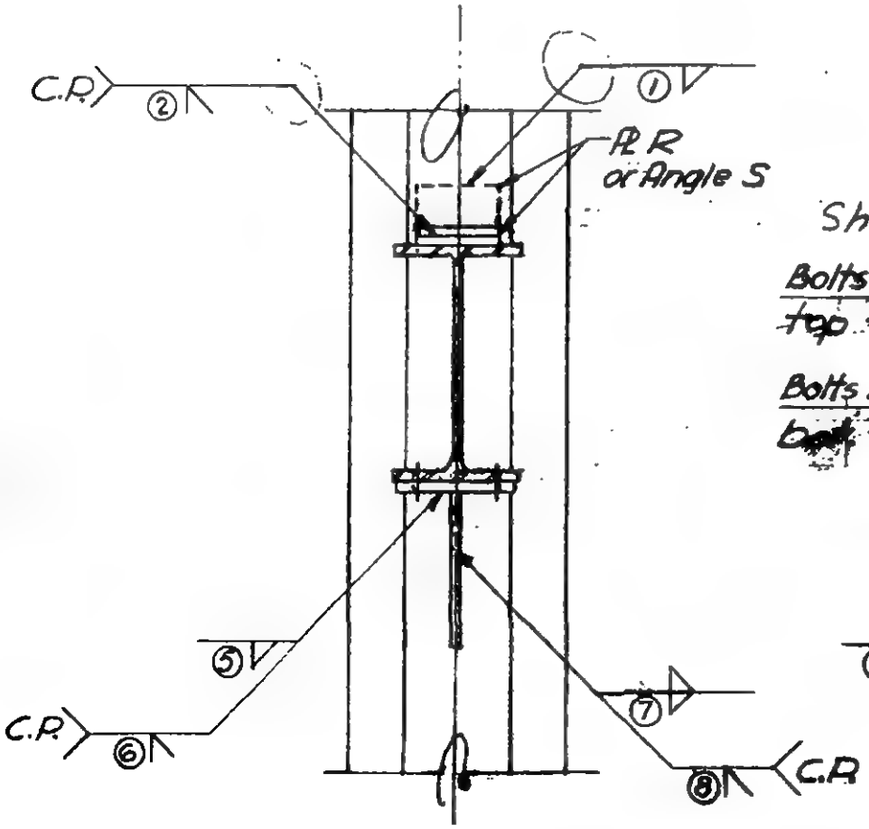

SECTION a-a

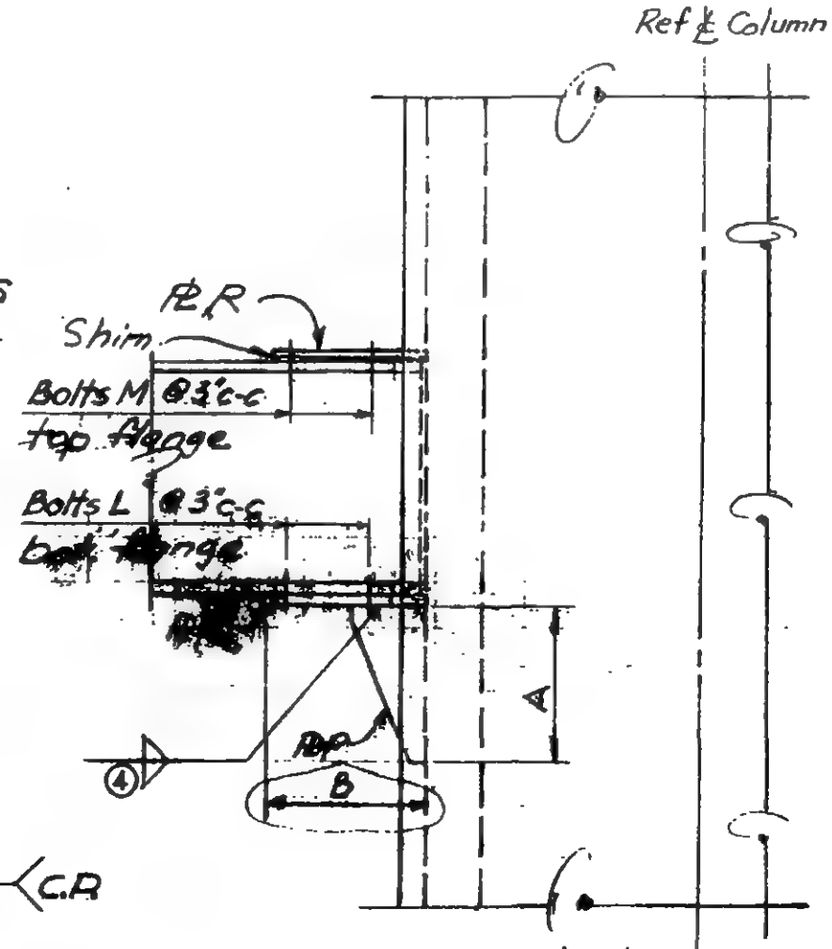

SECTION b-b

G-AB1-160

WORTHINGTON, SKILLING, HELLE & JACKSON — Civil & Structural Engineers

PROJECT: THE WORLD TRADE CENTER | TITLE: SCHEDULE FOR 353 A thru G | DATE: 6-30-67

REVISIONS
7-28-67

	353 A	353 B	353 C	353 D	353 E	353 F	353 G
PLATES							
P	5" x 1/2"	5" x 5/8"	9 1/2" x 7/8"	7" x 1/2"	5" x 1/2"	5" x 5/8"	11 1/2" x 5/8"
Q	8" x 3/8"	9" x 7/8"	8 1/2" x 7/8"	9" x 1/4" 7" x 3/8"	8" x 3/8"	8 1/2" x 3/8"	8" x 3/8"
R	—	—	—		—	—	—
ANGLE							
S	4x4x5/16x0'-4 1/2"	4x4x5/16x0'-4 1/2"	4x4x5/16x0'-4	—	4x4x5/16x0'-4 1/2	4x4x5/16x0'-4 1/2"	4x4x5/16x0'-4 1/2"
DIMENSIONS							
A	1'-1"	1'-1"	1'-8"	1'-9"	1'-1"	1'-1	1'-10"
B	9"	9"	9 1/2"	2'-6"	9"	9"	11 1/2"
BOLTS							
L	4-3/4"Φ(A325)	4-1 1/8"Φ(A325)	4-7/8"Φ(A325)	18-1 1/4"Φ(A325)	4-3/4"Φ(A325)	4-7/8"Φ(A325)	4-3/4"Φ(A325)
M	—	—	—	18-1"Φ(A325)	—	—	—
WELDS							
①	5/16	5/16	5/16	—	5/16	5/16	5/16
②	—	—	—	C.P.	—	—	—
④	5/16	5/16	5/16	5/16	5/16	5/16	5/16
⑤	—	—	—	—	—	—	—
⑥	C.P	C.P.	C.P.	C.P.	C.P.	C.P.	C.P.
⑦	—	—	—	—	—	—	—
⑧	C.P.	C.P.	C.P.	C.P.	C.P.	C.P.	C.P.
⑨	1/4	1/4	1/4	—	1/4	1/4	1/4

LICENSED PROFESSIONAL ENGINEER
LESLIE E. ROBERTSON
No. 34360
UNIVERSITY OF THE STATE OF NEW YORK

6-ABI-160.1

WORTHINGTON, SKILLING, HELLE & JACKSON — Civil & Structural Engineers

PROJECT: THE WORLD TRADE CENTER | TITLE: CONNECTION DETAIL 354 A & B | DATE: 5-1-67

REVISIONS

6-30-67
7-28-67

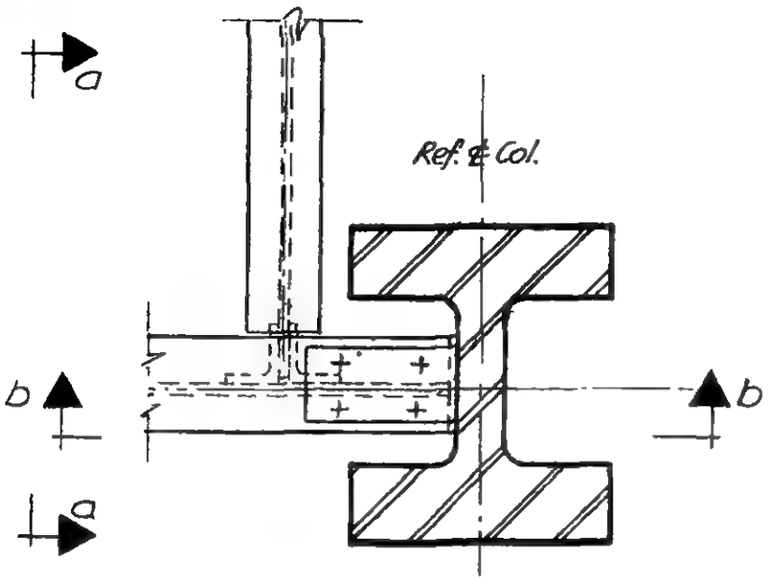

Plan

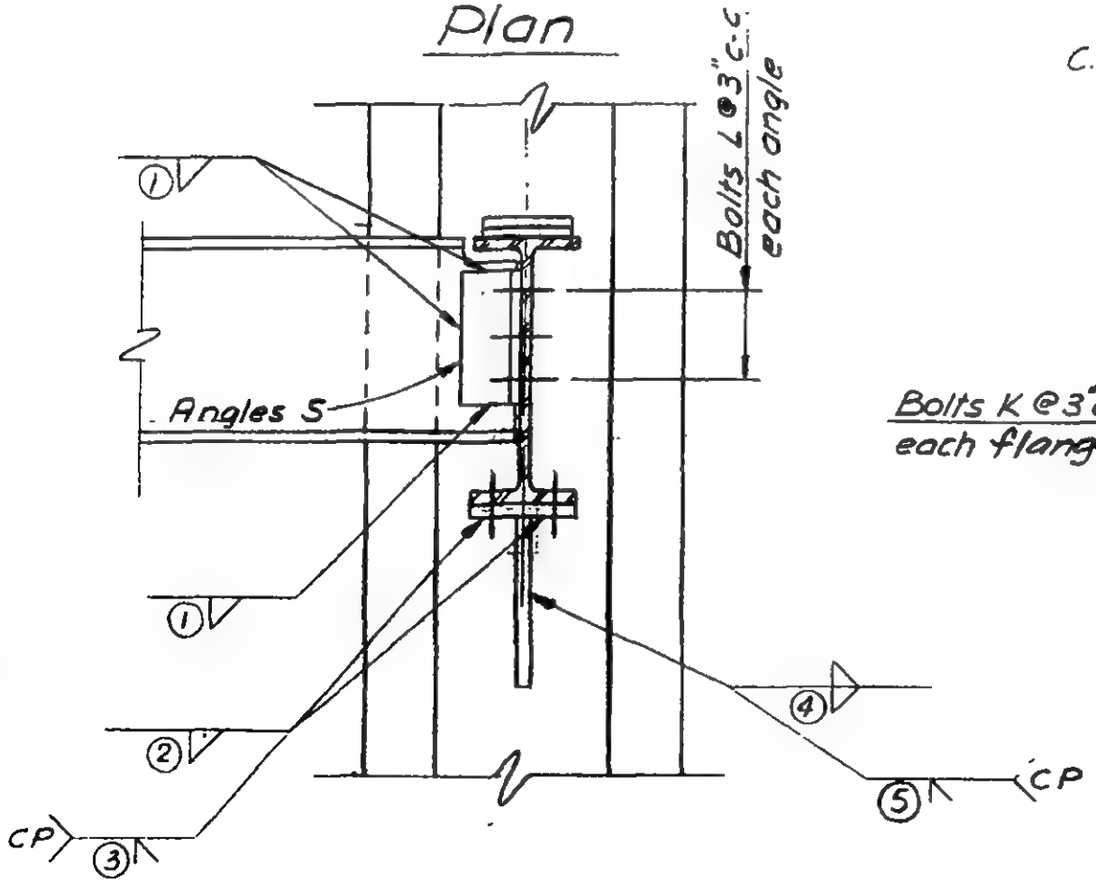

Section a-a

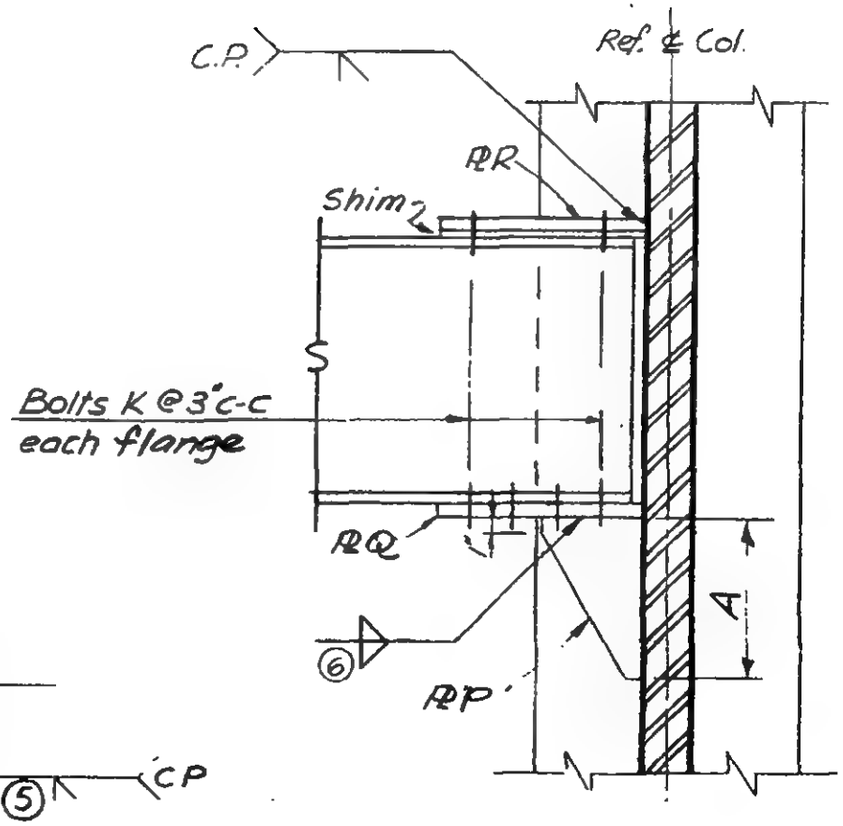

Section b-b

LICENSED PROFESSIONAL ENGINEER
LESLIE E. ROBERTSON
No. 34960
UNIVERSITY OF THE STATE OF NEW YORK

6-AB1-161

WORTHINGTON, SKILLING, HELLE & JACKSON — Civil & Structural Engineers

PROJECT THE WORLD TRADE CENTER | TITLE SCHEDULE FOR DETAIL 354 A & B | DATE 6-30-67

REVISIONS

7-28-67

	354 A	354 B
PLATES:		
P	7" x 3/8"	6" x 1/2"
Q	11/16"	34"
R	7" x 5/8"	7" x 3/4"
ANGLES		
S	4 x 3 x 5/16	4 x 3 1/2 x 5/16
DIMENSIONS		
A	0'-11"	1'-0"
BOLTS		
K	8-7/8" ϕ (A325)	8-7/8" ϕ
L	8-3/4 ϕ (A325)	3-3/4" ϕ
WELDS		
①	1/4	5/16
②	1/2	—
③	—	C.P
④	3/8	—
⑤	—	C.P
⑥	1/2	5/16

LICENSED PROFESSIONAL ENGINEER — LESLIE E. ROBERTSON — No. 34360 — UNIVERSITY OF THE STATE OF NEW YORK

6-ABI-161.1

SKILLING - HELLE - CHRISTIANSEN - ROBERTSON Structural & Civil Engineers

PROJECT THE WORLD TRADE CENTER | TITLE CONNECTION DETAIL 354 C | DATE 10-2-67

REVISIONS

10-31-67

Detail 354 C : See G-AB5-101 for bracing elevation

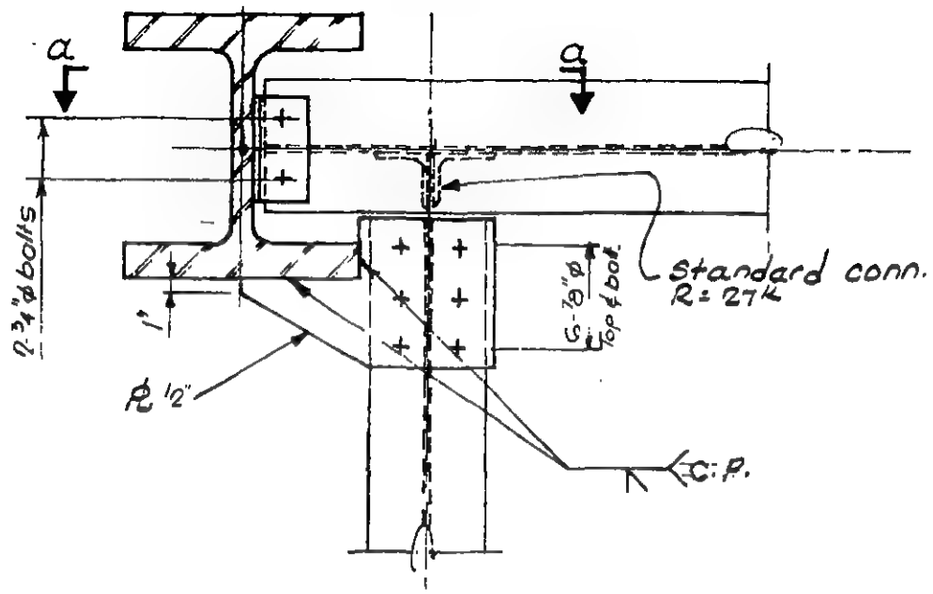

PLAN

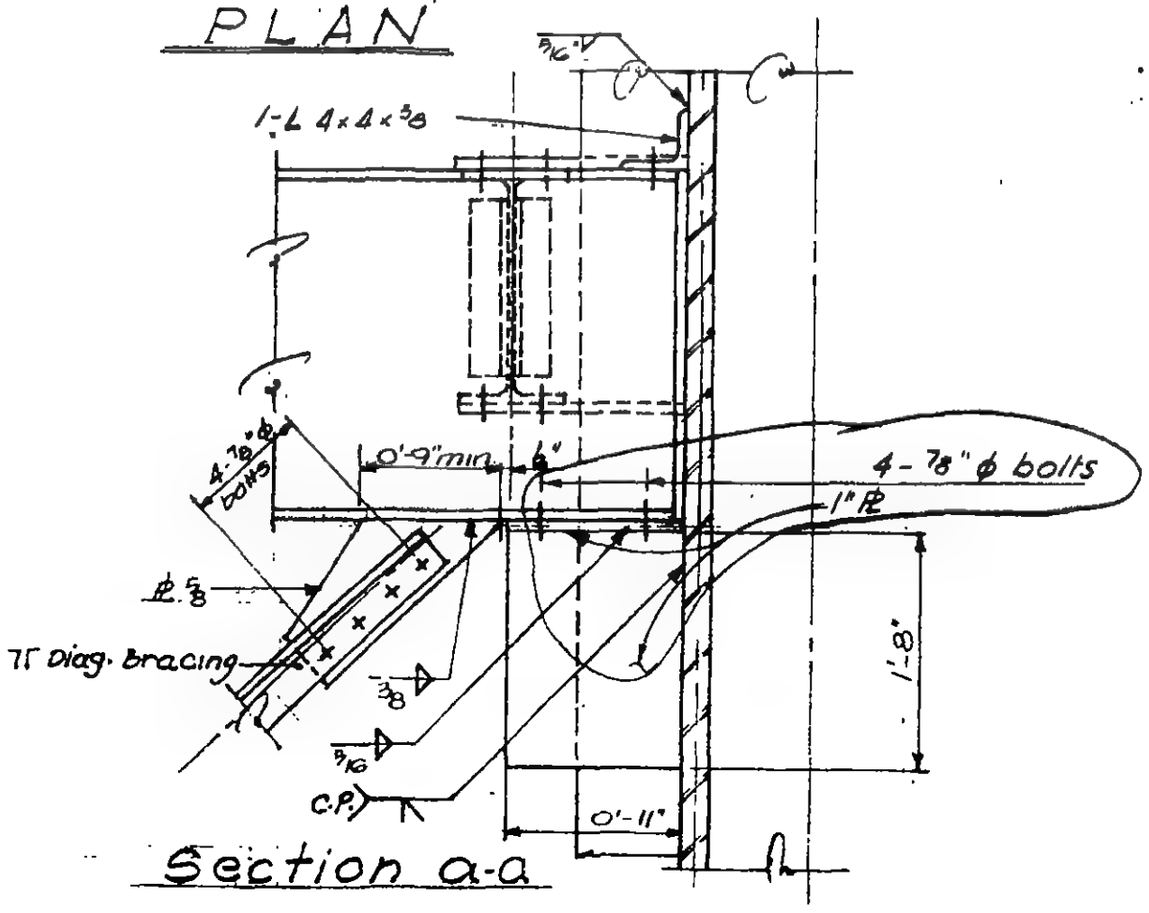

Section a-a

LICENSED PROFESSIONAL ENGINEER LESLIE E. ROBERTSON No. 34360 UNIVERSITY OF THE STATE OF NEW YORK

G-AB1-161.2

WORTHINGTON, SKILLING, HELLE & JACKSON — Civil & Structural Engineers

PROJECT THE WORLD TRADE CENTER | TITLE CONNECTION DETAIL 355 A | DATE 5-1-67

REVISIONS

7-28-67
8-5-67

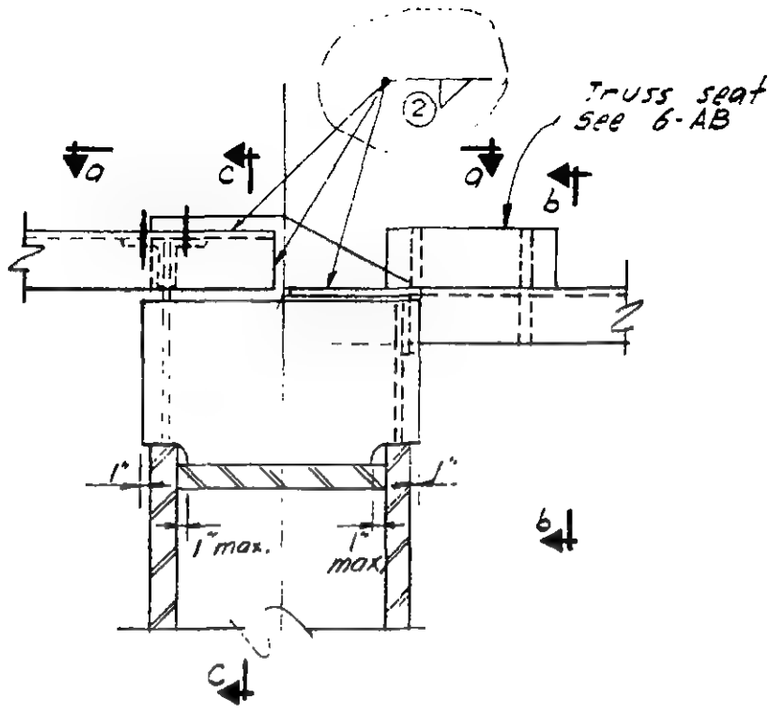

PLAN

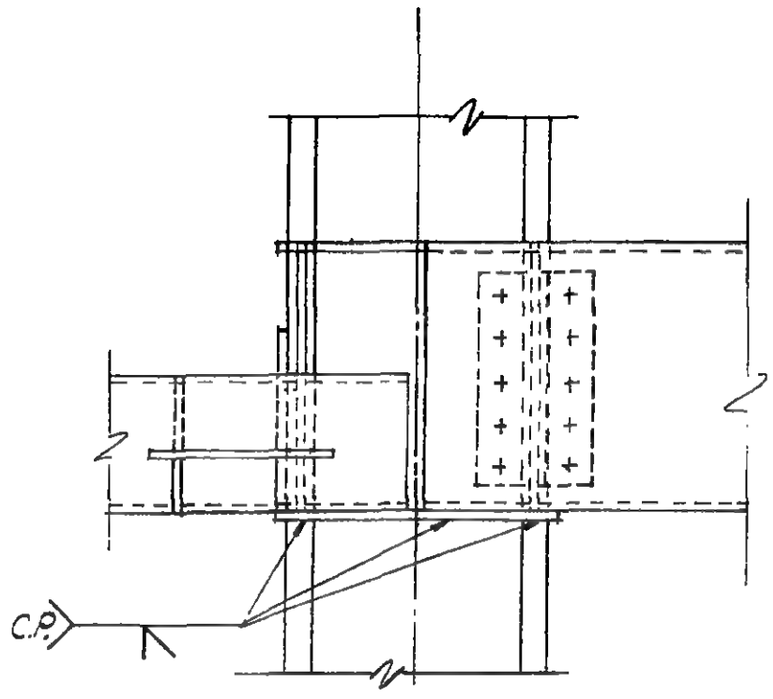

SECTION a-a

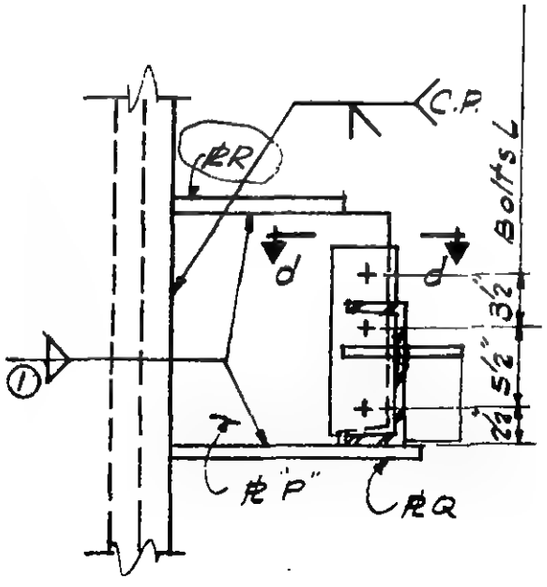

SECTION b-b

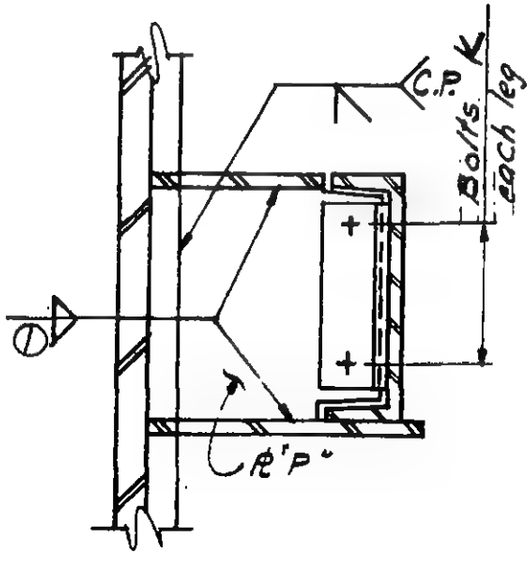

SECTION c-c

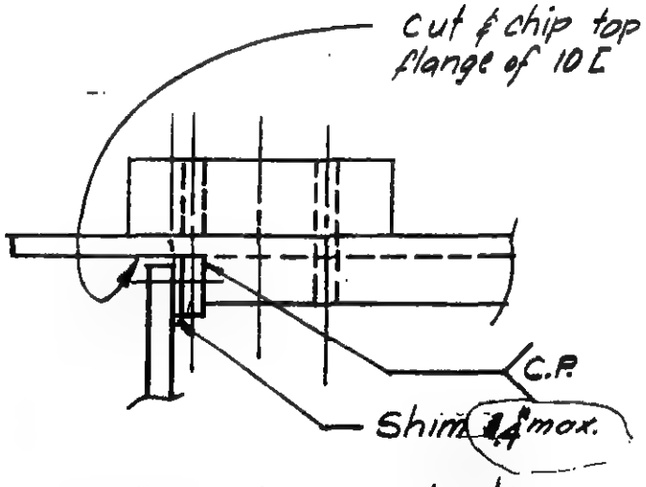

SECTION d-d

6-AB1-16

LICENSED PROFESSIONAL ENGINEER
LESLIE E. ROBERTSON
No. 34360
UNIVERSITY OF THE STATE OF NEW YORK

WORTHINGTON, SKILLING, HELLE & JACKSON — Civil & Structural Engineers

PROJECT THE WORLD TRADE CENTER | TITLE SCHEDULE FOR DETAIL 355 A | DATE 7-28-67

REVISIONS

8-5-67

	355 A
PLATES	
P	7/8
Q	1 1/2
R	1
S	7/8
ANGLES	
T	4 × 3 1/2 × 3/8
BOLTS	
K	5 - 7/8" ϕ
L	3 - 1 1/8" ϕ (A 490)
WELD	
①	3/8
②	1/2

6-ABI-162.1

WORTHINGTON, SKILLING, HELLE & JACKSON — Civil & Structural Engineers

PROJECT: THE WORLD TRADE CENTER | TITLE: CONNECTION DETAIL 357 A, B, C, D, E, F | DATE: 5-22-67

REVISIONS

7-5-67
8-14-67
10-2-67
10-5-67

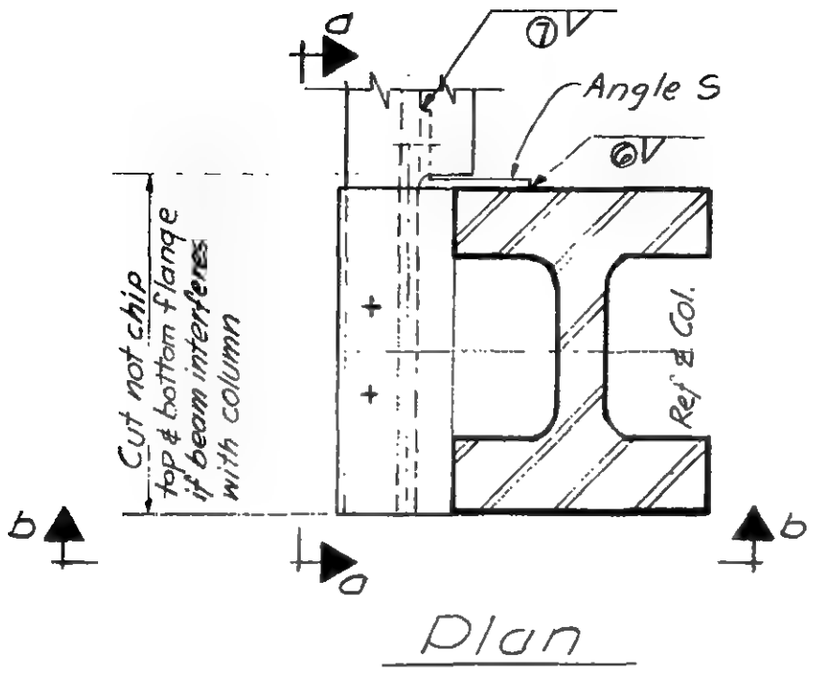

Plan

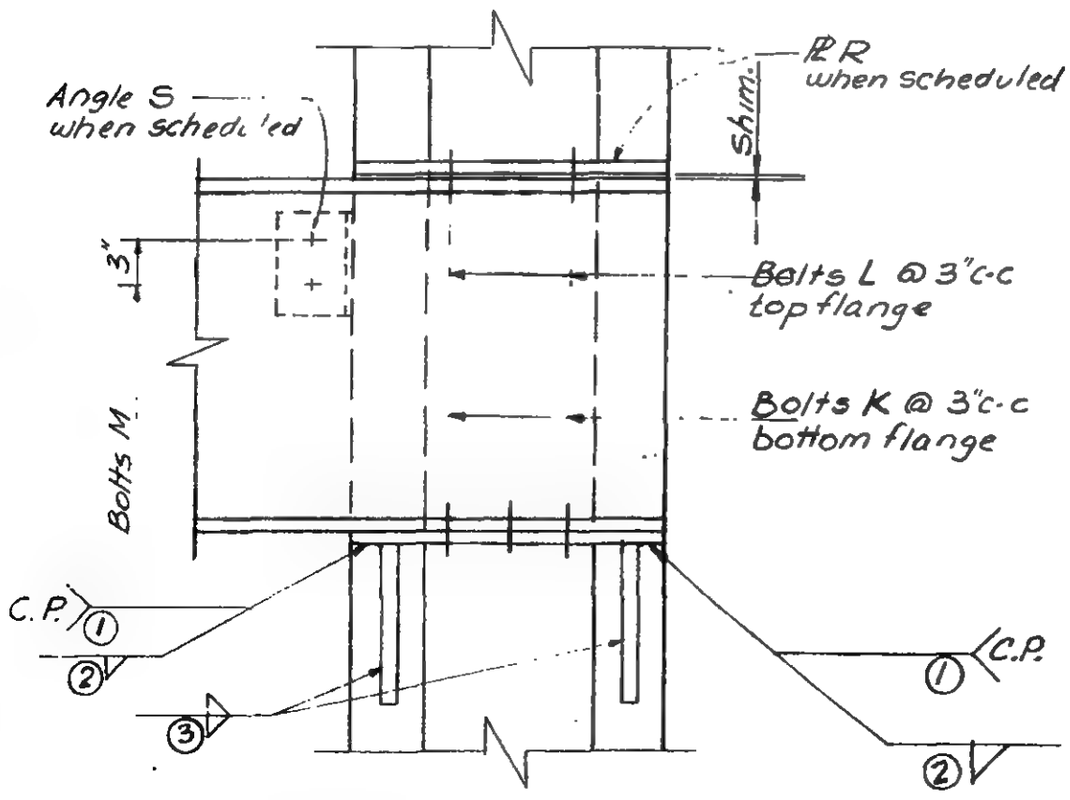

Section a-a

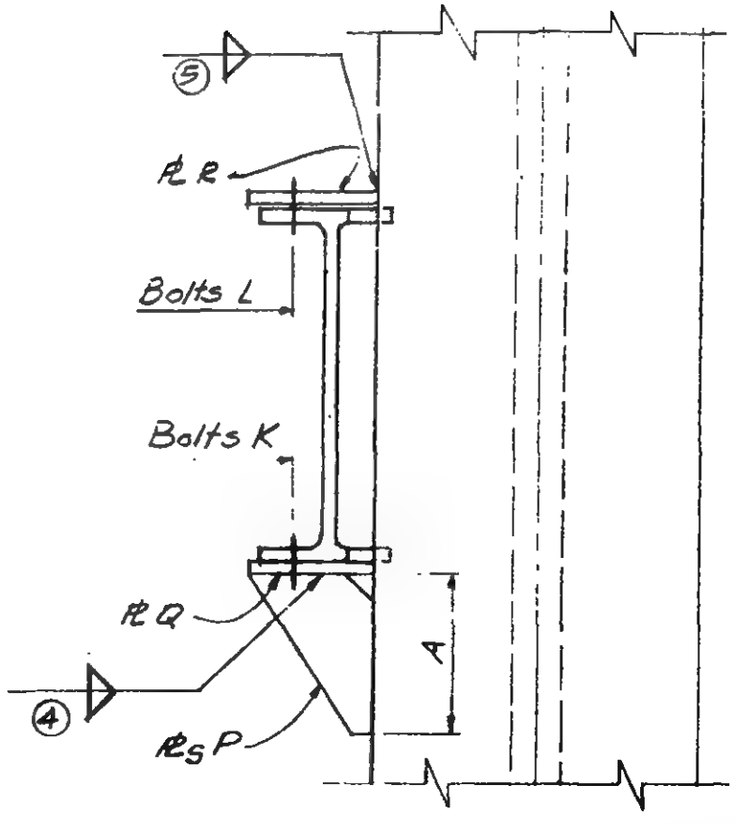

Section b-b

LICENSED PROFESSIONAL ENGINEER
LESLIE E. ROBERTSON
No. 34960
UNIVERSITY OF THE STATE OF NEW YORK

6-ABI-164

SKILLING - HELLE - CHRISTIANSEN - ROBERTSON Structural & Civil Engineers

PROJECT THE WORLD TRADE CENTER | TITLE SCHEDULE FOR DETAIL 357 A, B, C, D, E, F | DATE 7-5-67

REVISIONS
8-14-67
10-2-67

REF. DWGS.	G-ABI-164	G-ABI-164	G-ABI-164	G-ABI-164	G-ABI-164	G-ABI-164
	357 A	357 B	357 C	357 D	357 E	357 F
PLATES						
P	7½" x ½"	½"	⅝"	½"	½"	¾"
Q	7½" x ½"	½"	⅝"	⅝"	½"	¾"
R	—	—	⅝"	⅝"	—	—
ANGLES						
S	4 x 4 x ¼ x 0'-6"	7 x 4 x ⅜ x 0'-6"	—	—	7 x 4 x ⅜ x 0'-6"	6 x 4 x 5/16"
DIMENSIONS						
A	1'-0"	1'-0"	0'-10"	0'-8"	1'-0"	1'-0"
BOLTS						
K	3 - ⅞" ϕ (A325)	3 - ¾" ϕ	5 - 1" ϕ	5 - 1" ϕ	3 - ¾" ϕ	3 - ¾" ϕ
L	—	—	5 - 1" ϕ	5 - 1" ϕ	—	—
M	—	2 - ¾" ϕ	—	—	2 - ¾" ϕ	2 - ¾" ϕ
WELDS						
①	C. P.	—	C. P.	C. P.	—	C. P.
②	—	⅜	⅝"	⅜"	⅜"	—
③	½	⅜	⅜"	5/16"	⅜"	½"
④	⅜	5/16	5/16"	5/16"	5/16"	5/16"
⑤	—	—	½"	½"	—	—
⑥	¼	5/16	—	—	5/16"	5/16"
⑦	¼	—	—	—	—	—

LICENSED PROFESSIONAL ENGINEER
LESLIE E. ROBERTSON
No. 34360
UNIVERSITY OF THE STATE OF NEW YORK

6 - ABI - 164.1

SKILLING - HELLE - CHRISTIANSEN - ROBERTSON Structural & Civil Engineers

PROJECT THE WORLD TRADE CENTER | TITLE CONNECTION DETAILS 357 G, K | DATE 10-5-67

REVISIONS

11-23-67

357G

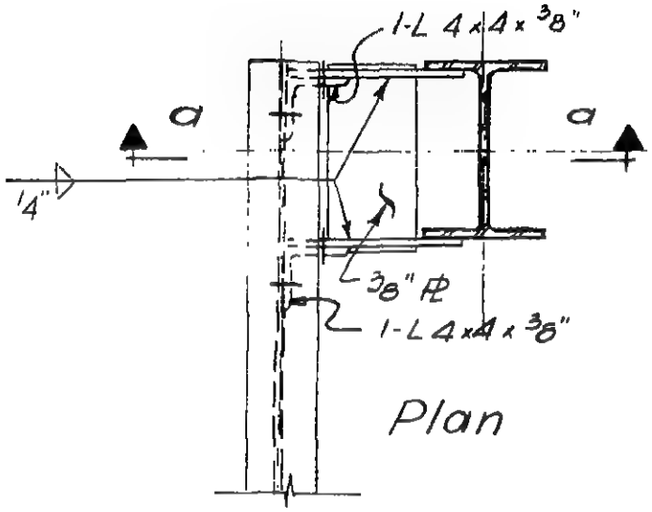

Plan

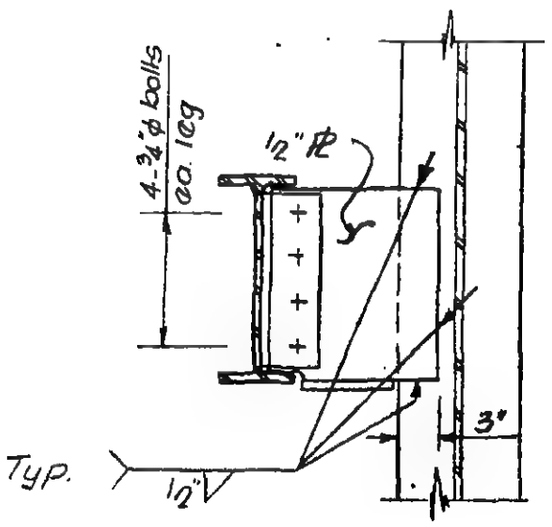

Section a-a

357K

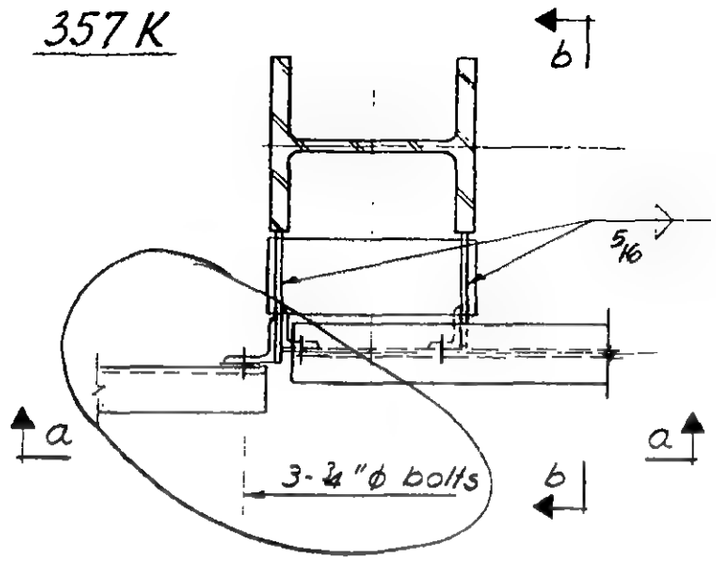

Plan

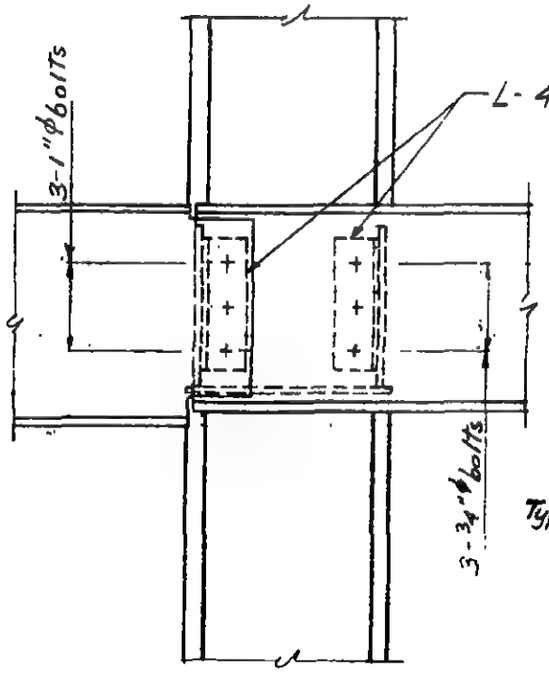

Section a-a

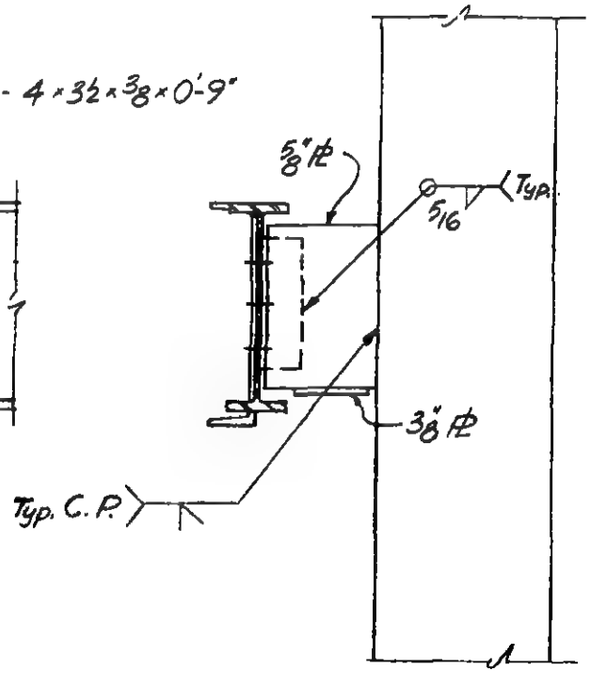

Section b-b

LESLIE E. ROBERTSON
REGISTERED PROFESSIONAL ENGINEER
No. 34360
STATE OF NEW YORK

G-ABI-164.2

WORTHINGTON, SKILLING, HELLE & JACKSON — Civil & Structural Engineers

PROJECT THE WORLD TRADE CENTER | TITLE CONNECTION DETAIL 358A | DATE 5-22-67

REVISIONS

10-12-67

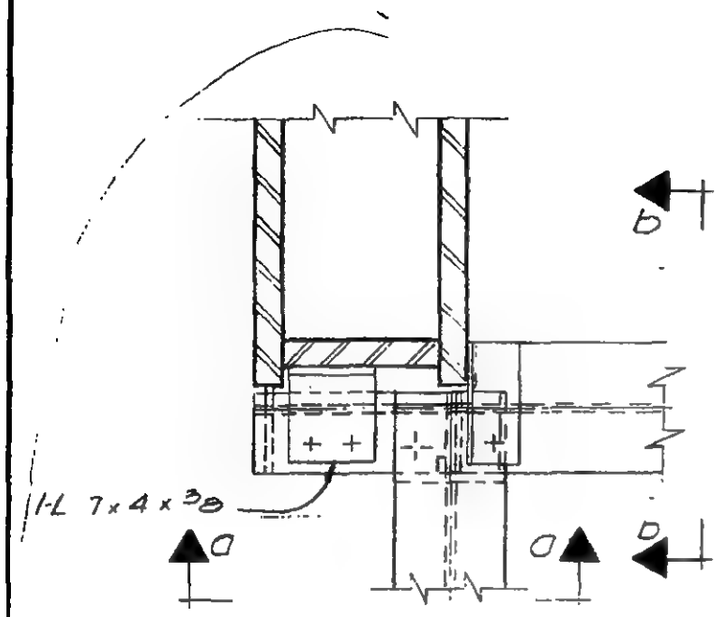

Plan

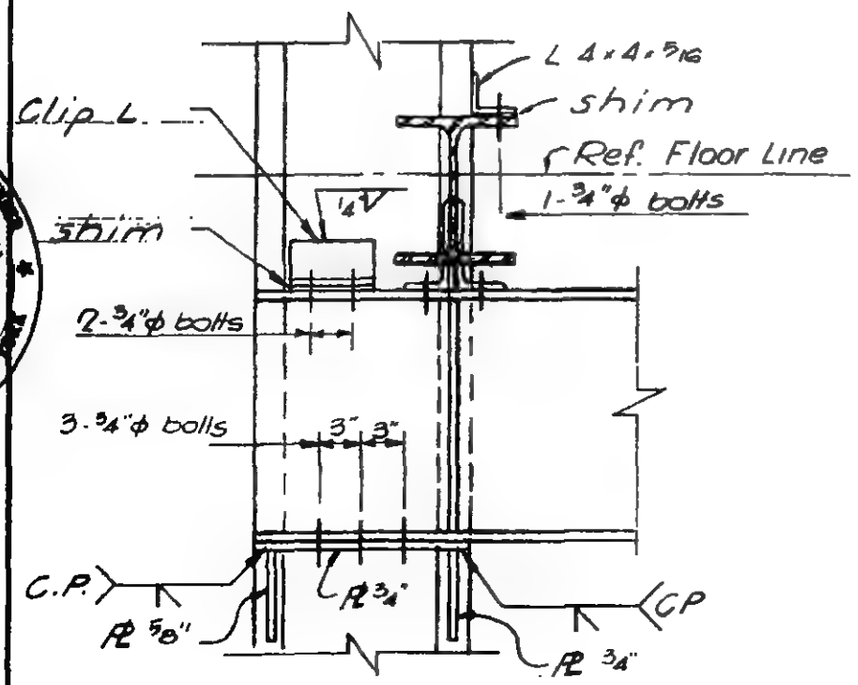

Section a-a

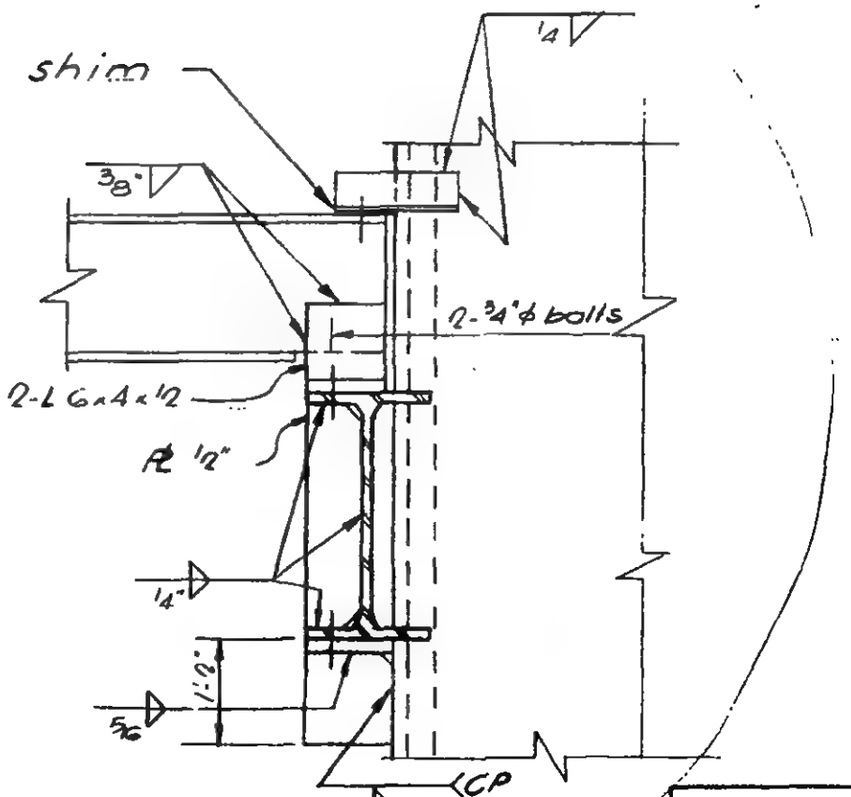

Section b-b

LICENSED PROFESSIONAL ENGINEER — LESLIE E. ROBERTSON — No. 34360 — UNIVERSITY OF THE STATE OF NEW YORK

6-AB1-165

WORTHINGTON, SKILLING, HELLE & JACKSON — Civil & Structural Engineers

PROJECT	TITLE	DATE
THE WORLD TRADE CENTER	CONNECTION DETAIL 359 A	5-22-67

REVISIONS

7-28-67

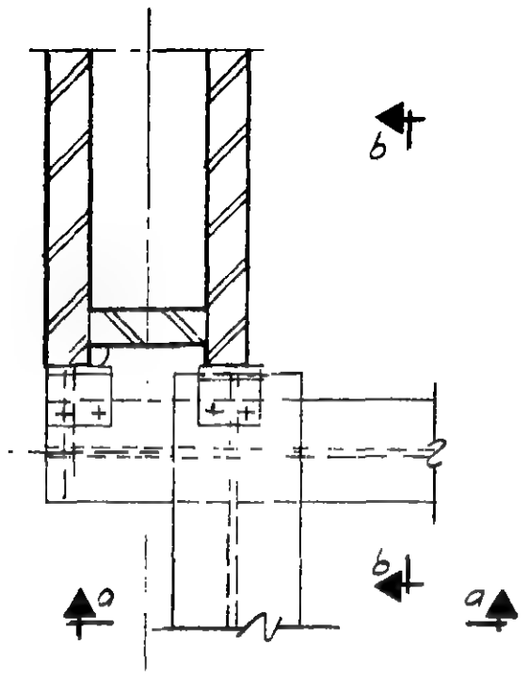

Plan

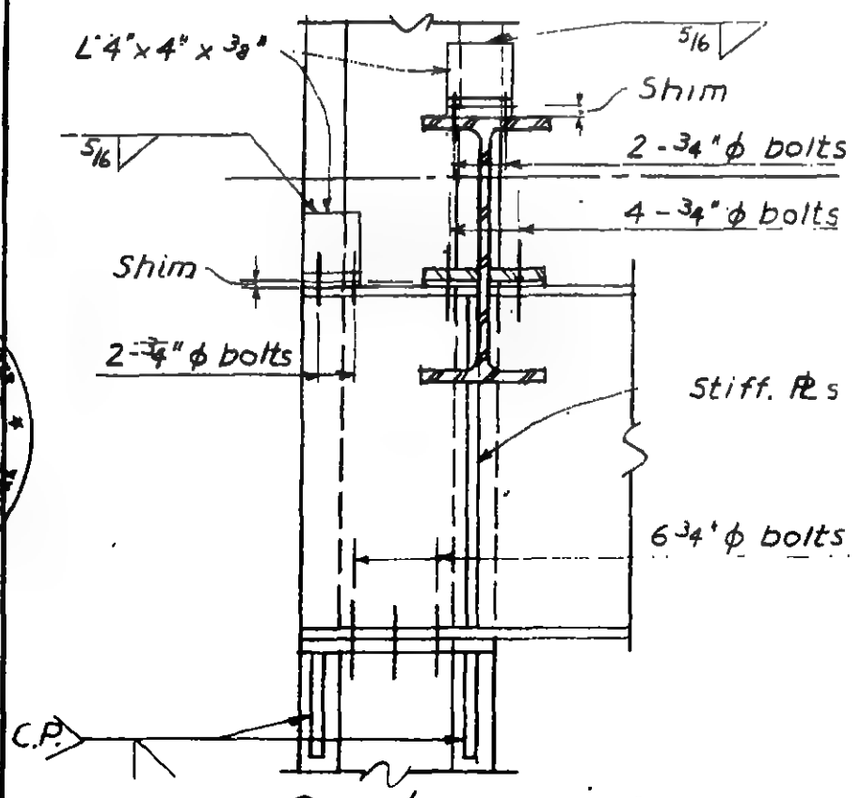

Section a-a

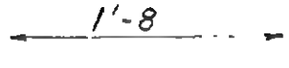
1'-8

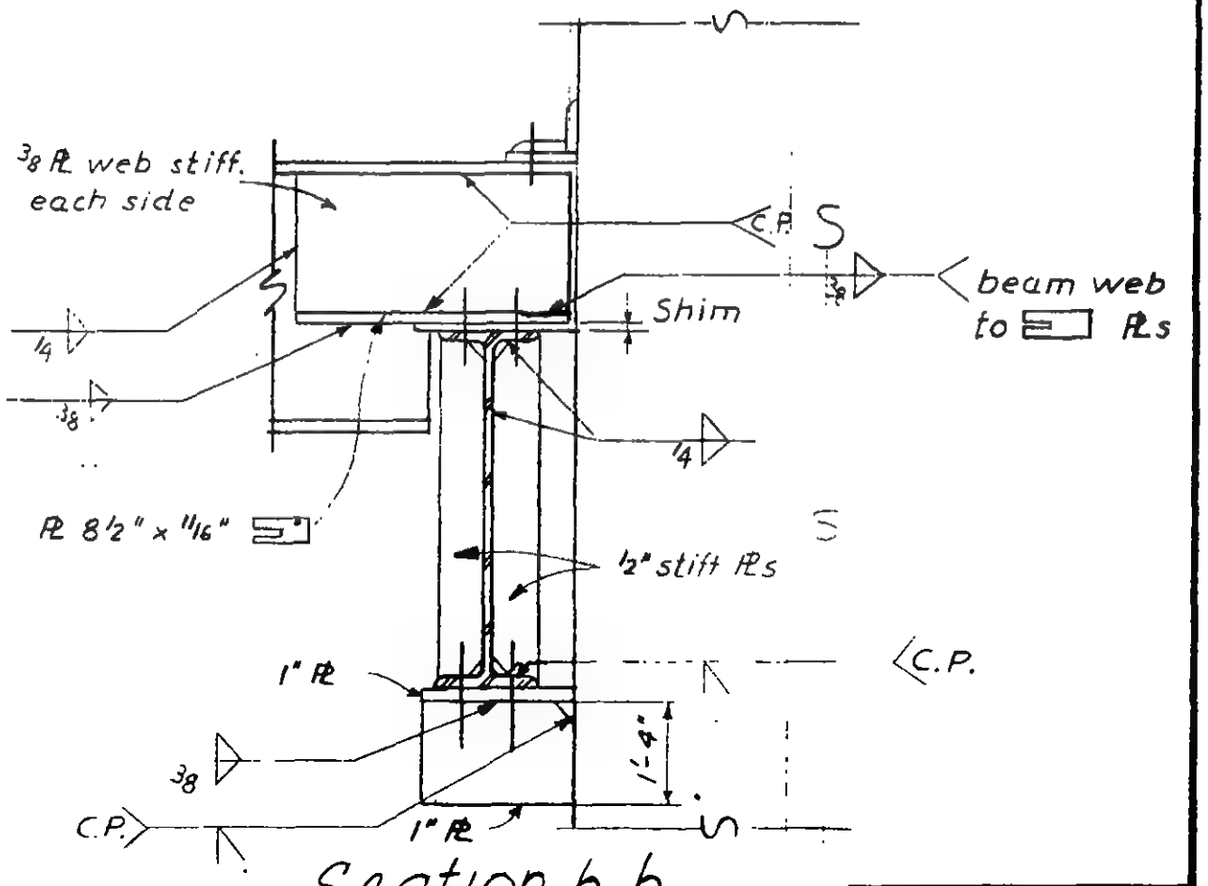

Section b-b

LICENSED PROFESSIONAL ENGINEER LESLIE E. ROBERTSON No. 34360 UNIVERSITY OF THE STATE OF NEW YORK

6-ABI-166

SKILLING - HELLE - CHRISTIANSEN - ROBERTSON Structural & Civil Engineers

PROJECT THE WORLD TRADE CENTER | TITLE CONNECTION DETAIL 359 B | DATE 10-2-67

REVISIONS

10-31-67

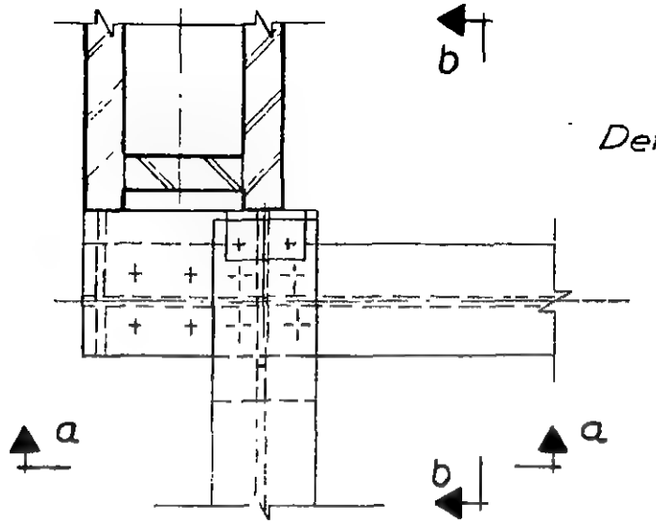

Plan

Detail 359 B : See G-AB5-96 for bracing elevation

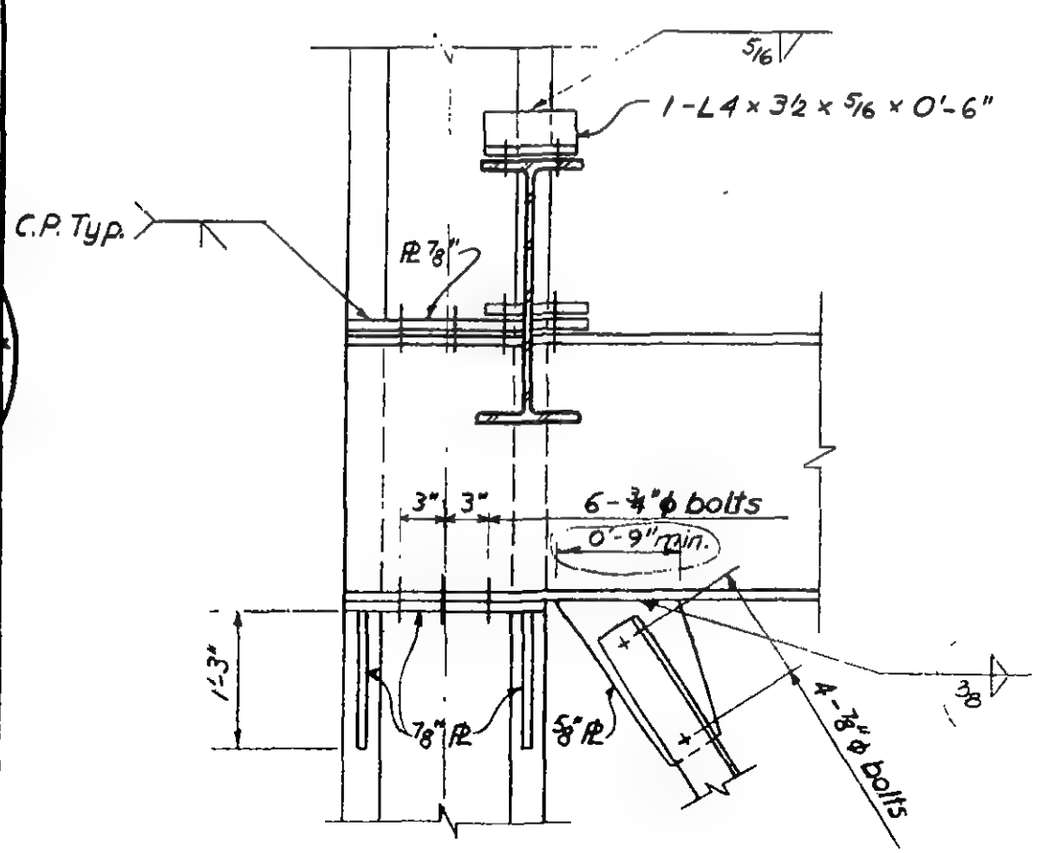

Section a-a

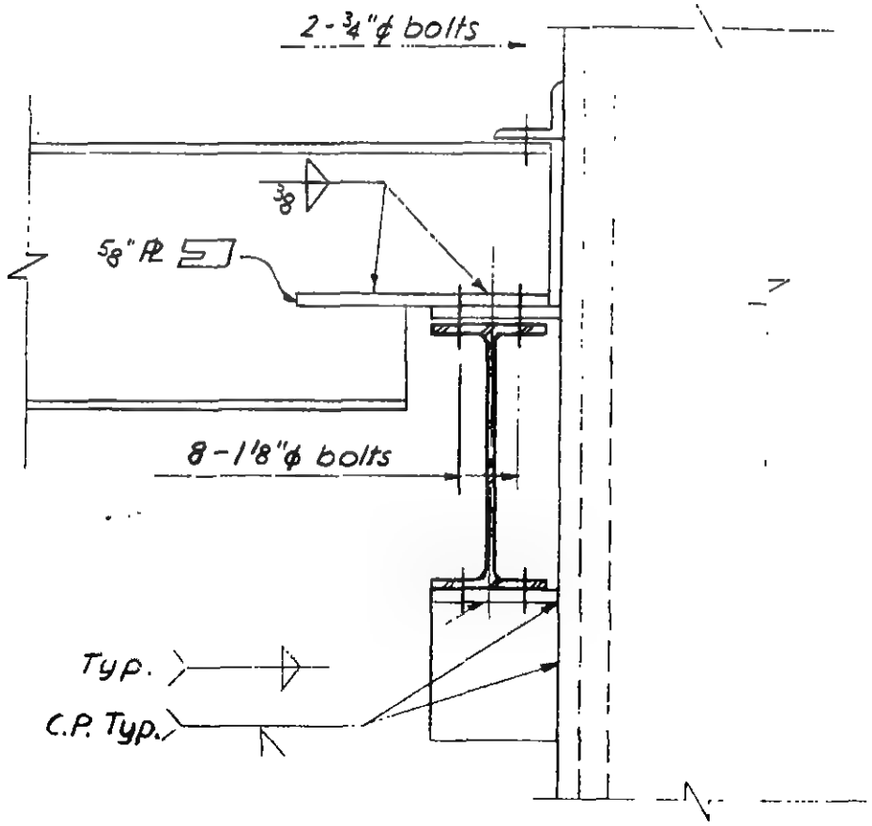

Section b-b

6-AB1-166.1

LICENSED PROFESSIONAL ENGINEER
LESLIE E. ROBERTSON
No. 34360
UNIVERSITY OF THE STATE OF NEW YORK

WORTHINGTON, SKILLING, HELLE & JACKSON — Civil & Structural Engineers

PROJECT: THE WORLD TRADE CENTER | TITLE: CONNECTION DETAIL 360 A, B | DATE: 5-22-67

REVISIONS

9-15-67

10-2-67

11-10-67

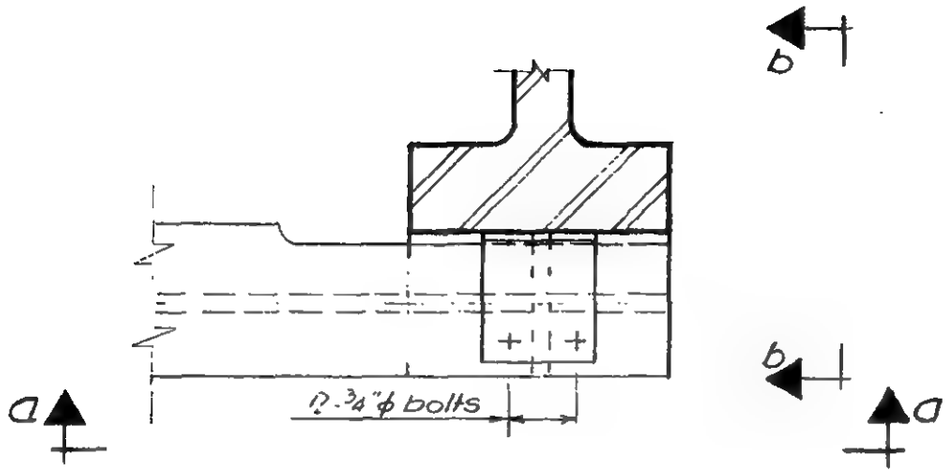

Plan

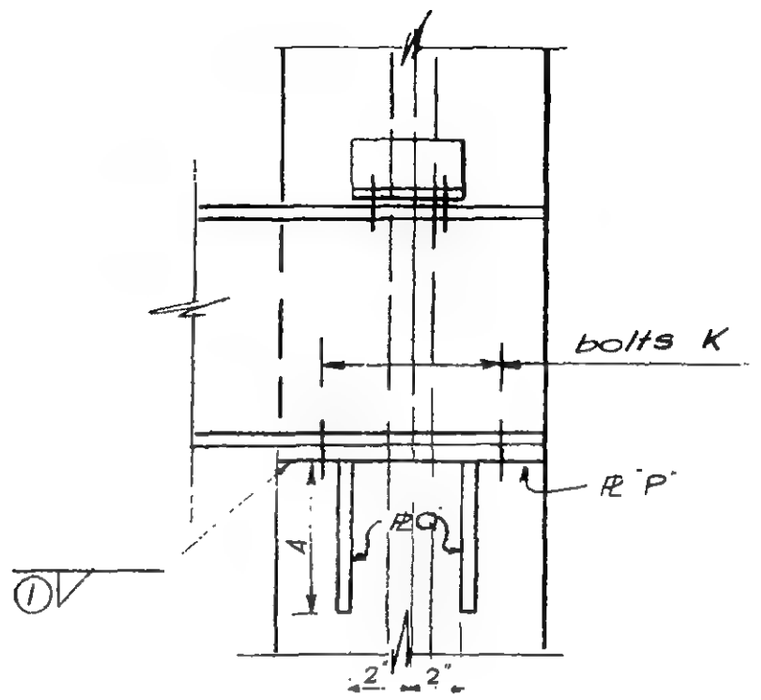

Section a-a
360 B only

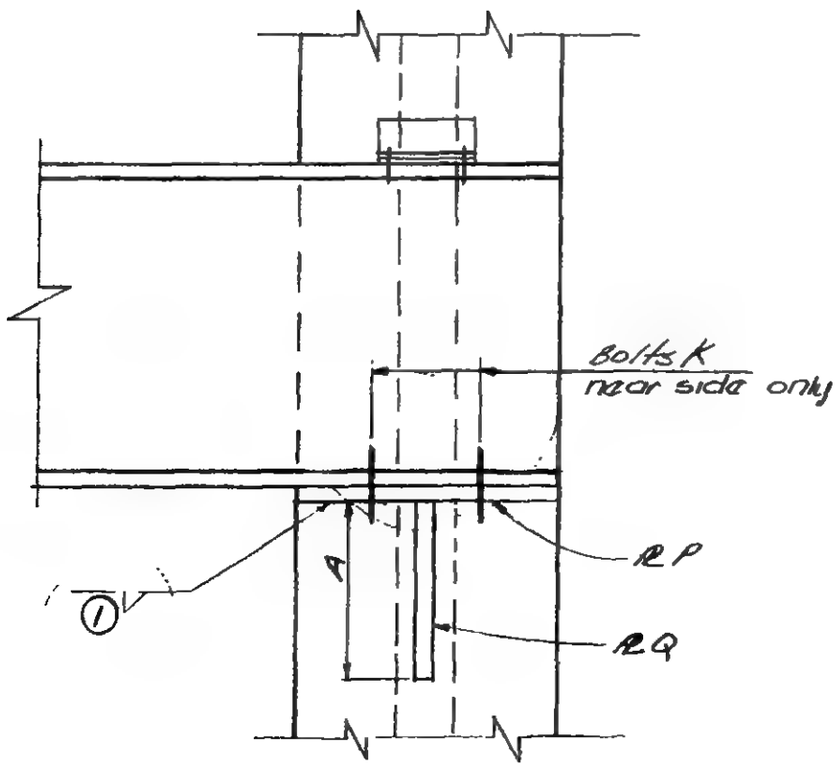

Section a-a

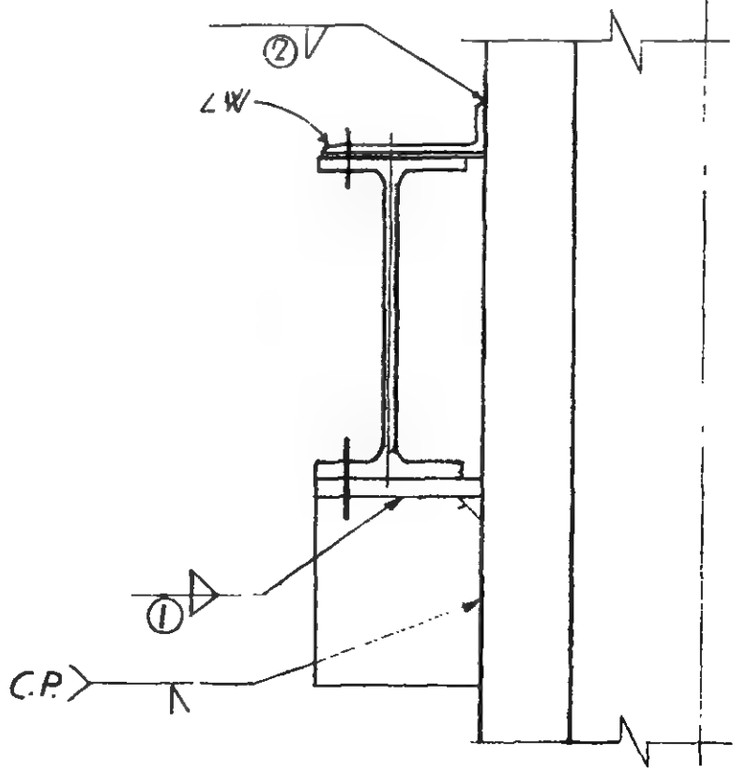

Section b-b

6-AB1-167

LESLIE E. ROBERTSON — REGISTERED PROFESSIONAL ENGINEER — No. 34390 — STATE OF NEW YORK

SKILLING - HELLE - CHRISTIANSEN - ROBERTSON Structural & Civil Engineers

PROJECT THE WORLD TRADE CENTER | TITLE SCHEDULE FOR DETAIL 360A. B. | DATE 9-15-67

REVISIONS

10-7-67

11-10-67

	360A	360B				
PLATES						
P	5/8"	3/4"				
Q	3/8"	3/4"				
ANGLE						
W	4 x 3 1/2 x 5/16 x 0'-6"	8 x 4 x 7/16 x 0'-6"				
DIMENSIONS						
A	0'-6"	1'-8"				
BOLTS						
K	2 - 3/4" ϕ	[illegible]				
WELDS						
1	5/16	5/16"				
2	1/4	3/8				

NO. 34360 STATE OF NEW YORK

6-A81-167.1

WORTHINGTON, SKILLING, HELLE & JACKSON — Civil & Structural Engineers

PROJECT: THE WORLD TRADE CENTER | TITLE: CONNECTION DETAIL 361 A & B | DATE: 5-22-67

REVISIONS

10-2-67

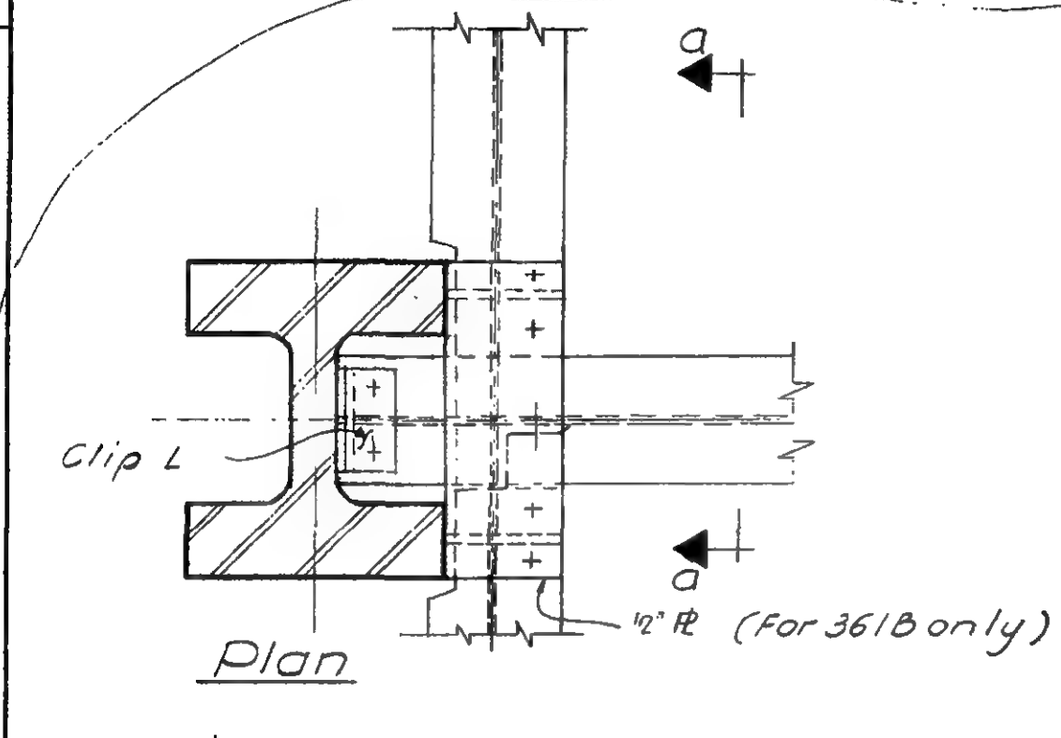

Plan

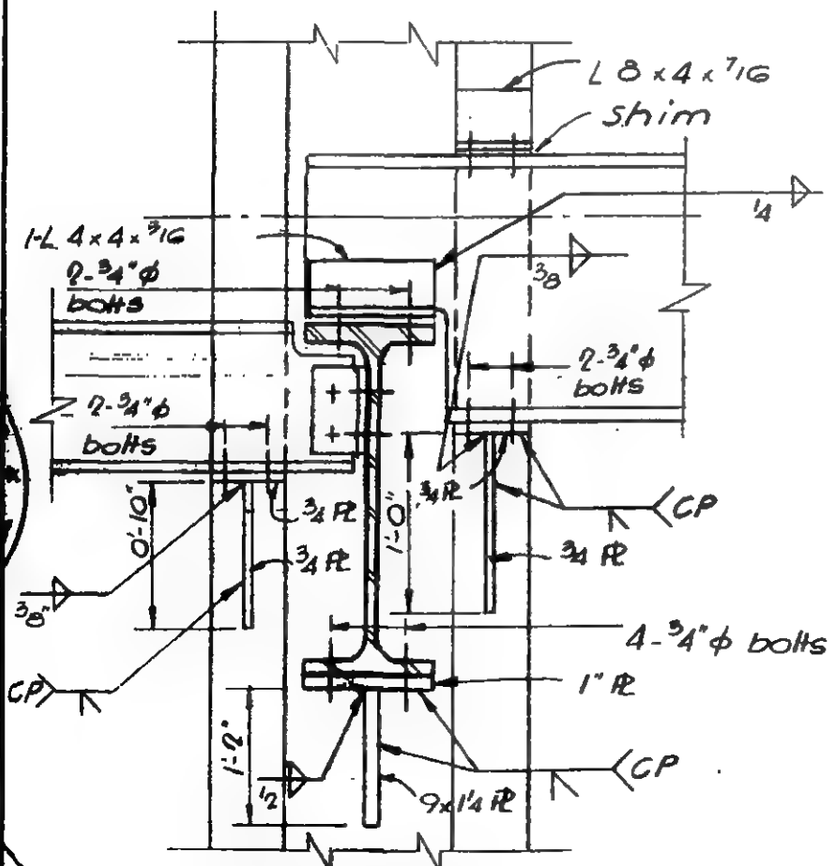

Section a-a
For 361A

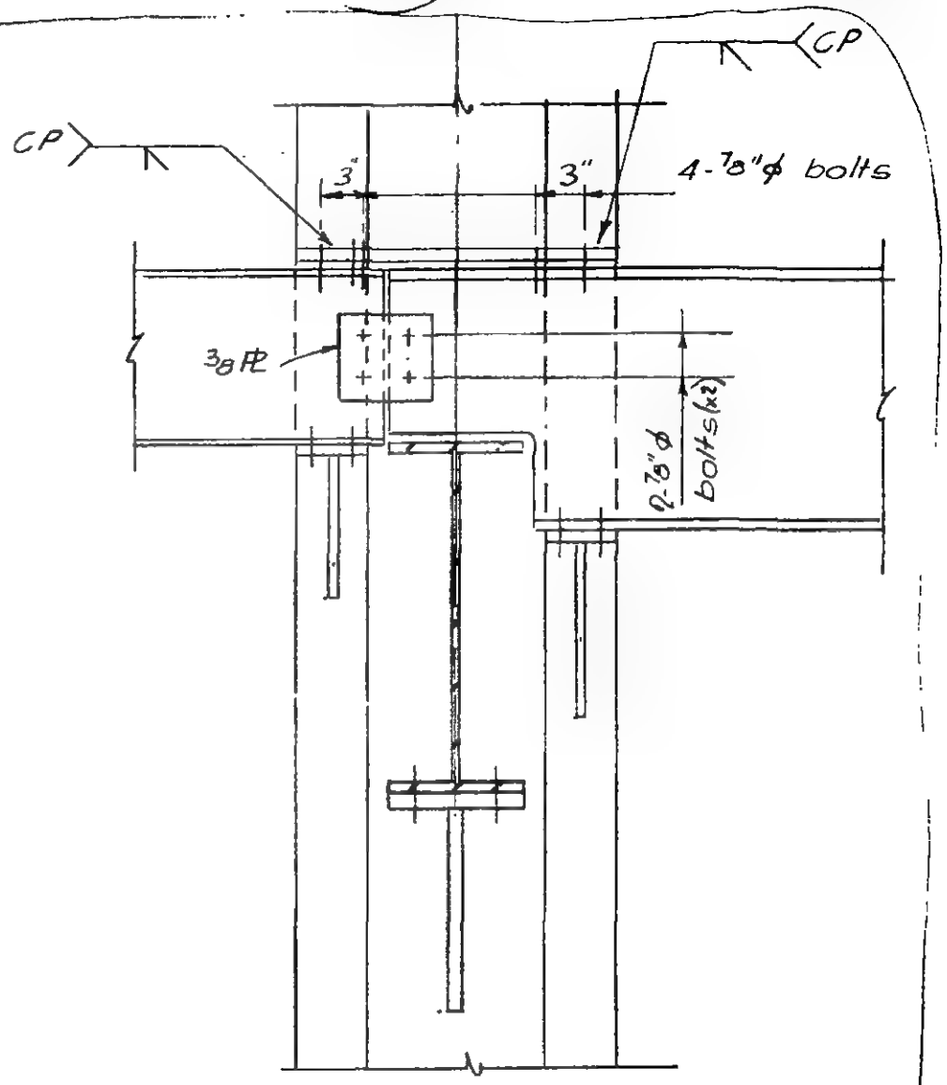

Section a-a
For 361B

For information not shown see Sect. a-a for 361A.

LICENSED PROFESSIONAL ENGINEER
LESLIE E. ROBERTSON
No. 34960
UNIVERSITY OF THE STATE OF NEW YORK

6-AB1-168

SKILLING - HELLE - CHRISTIANSEN - ROBERTSON Structural & Civil Engineers

PROJECT THE WORLD TRADE CENTER | TITLE CONNECTION DETAIL 362 A | DATE 10-2-67

REVISIONS

10-31-67

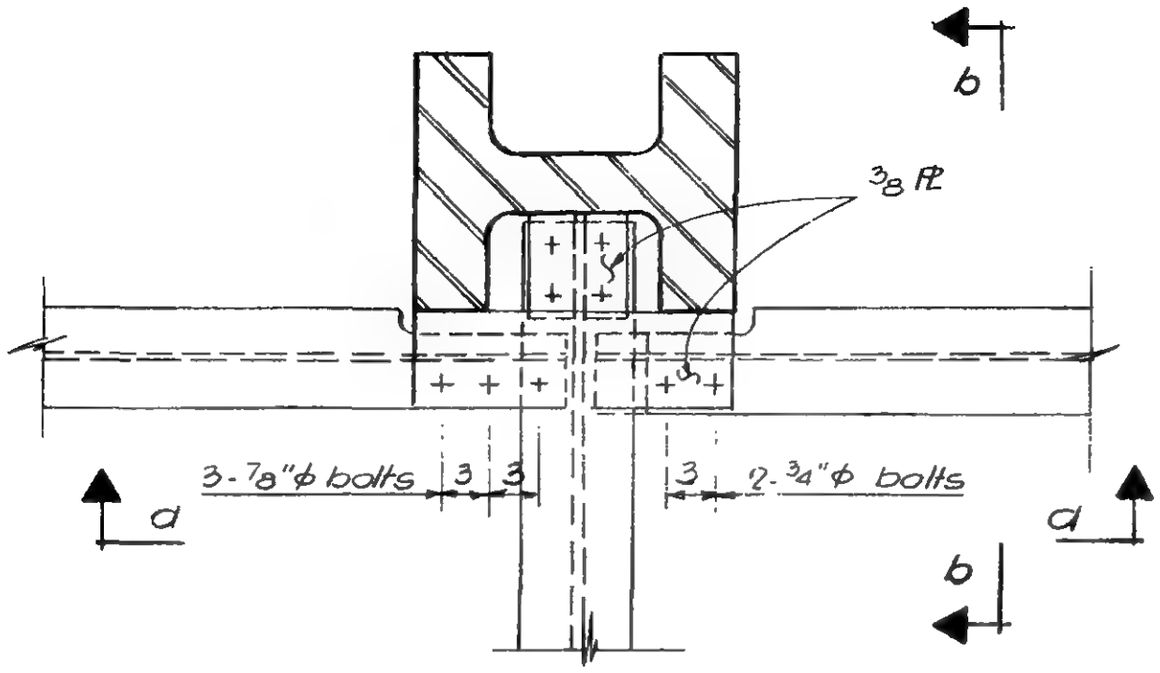

Plan

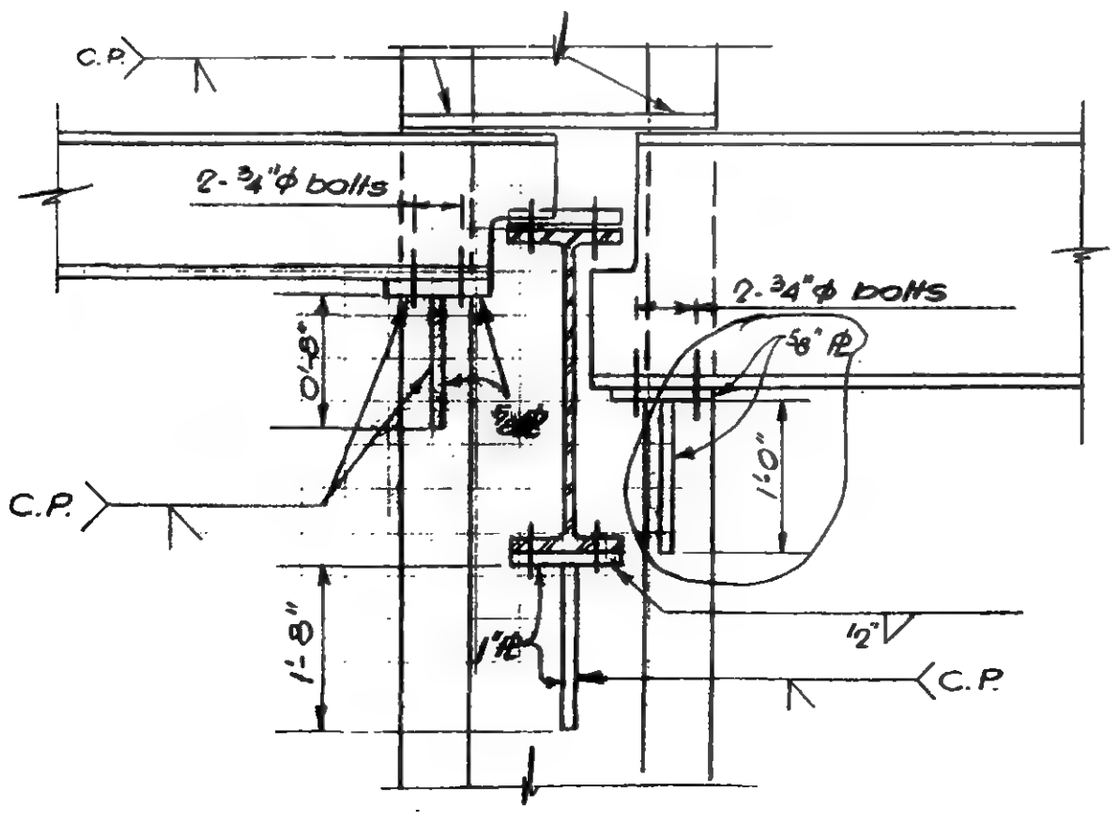

Section a-a

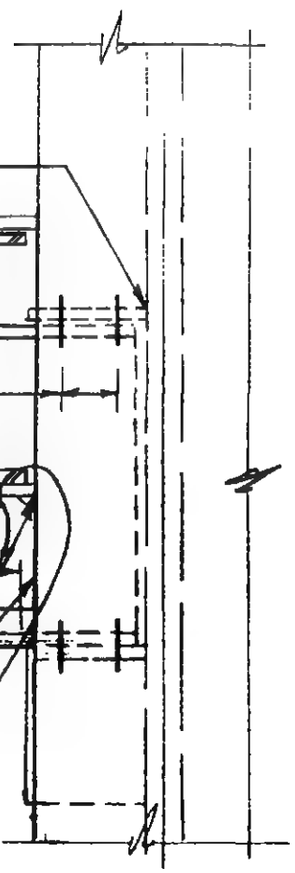

Section b-b

G-AB1-169

SKILLING - HELLE - CHRISTIANSEN - ROBERTSON Structural & Civil Engineers

PROJECT THE WORLD TRADE CENTER | TITLE CONNECTION DETAIL 362 B,C | DATE 10-2-67

REVISIONS

All bolts ¾"ϕ

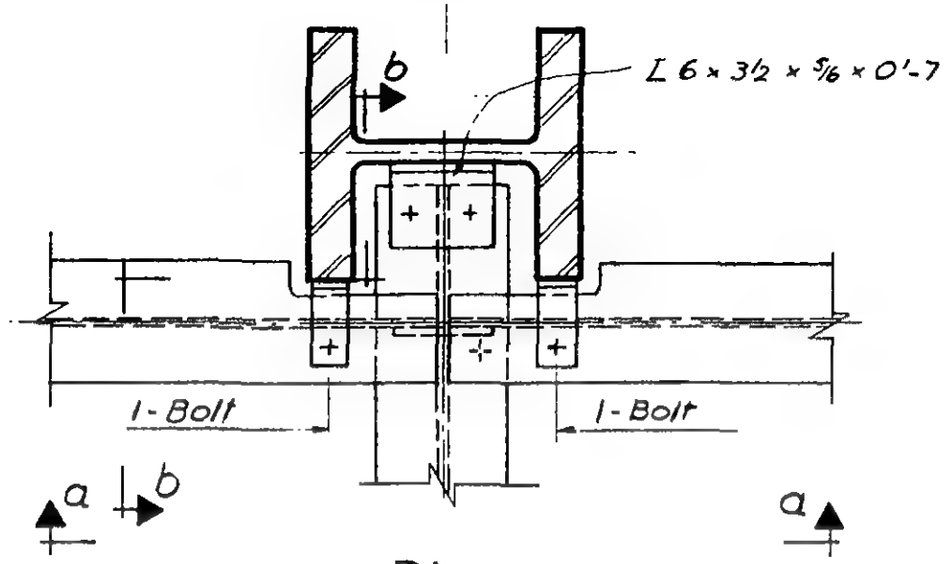

Plan

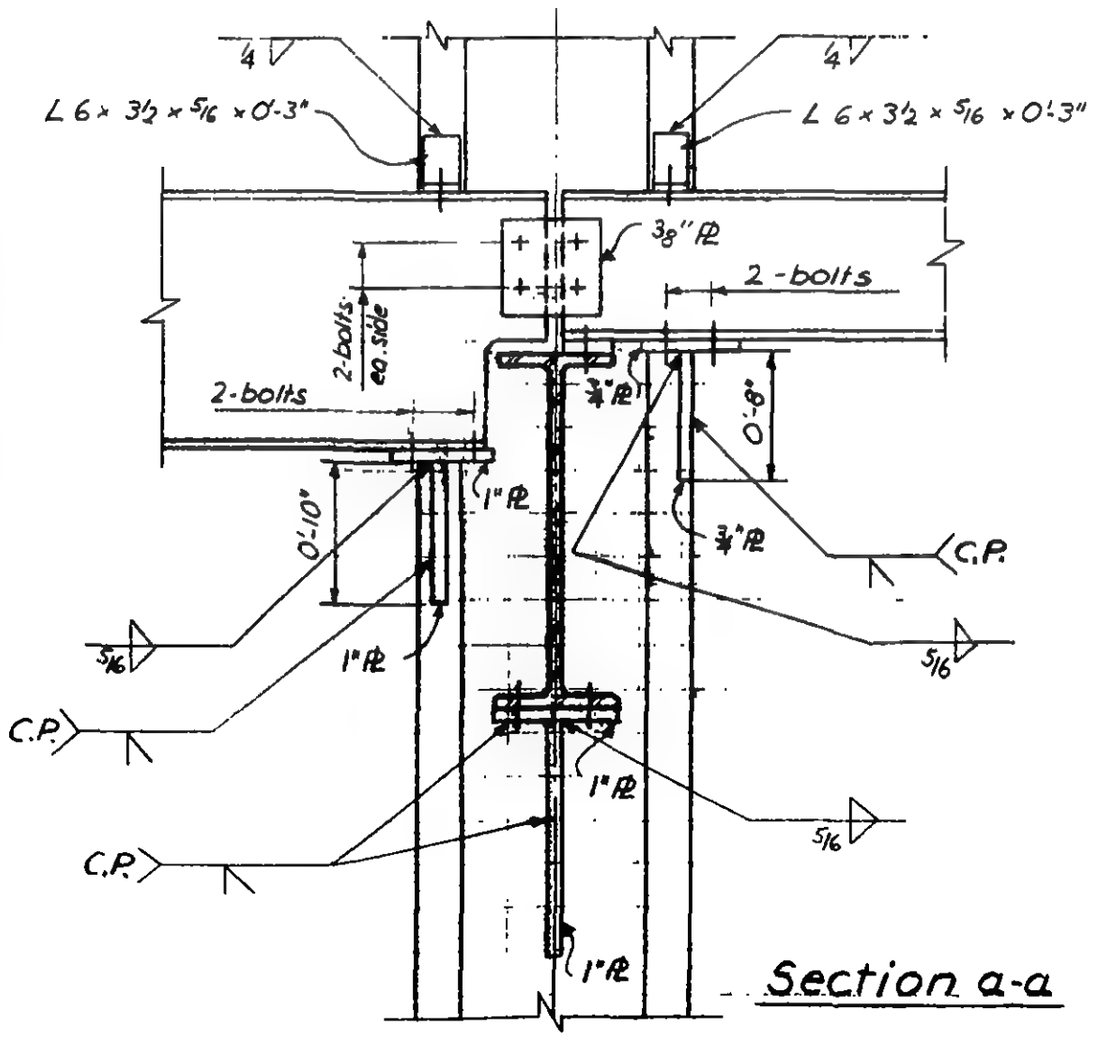

Section a-a

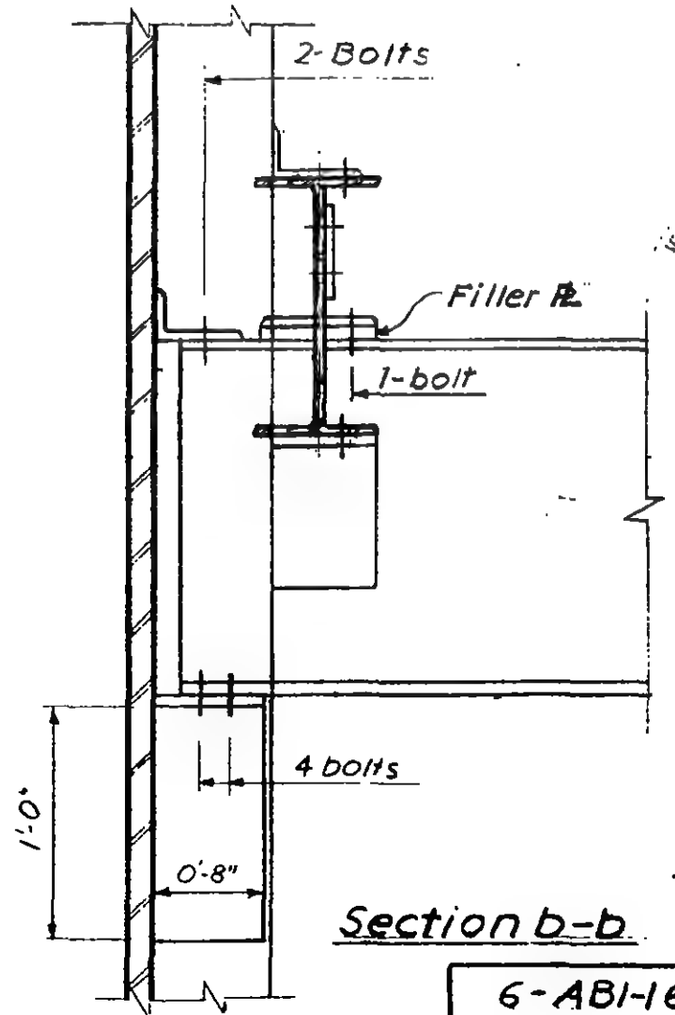

Section b-b

6-ABI-169.1

LICENSED PROFESSIONAL ENGINEER
LESLIE E. ROBERTSON
No. 34360
UNIVERSITY OF THE STATE OF NEW YORK

WORTHINGTON, SKILLING, HELLE & JACKSON — Civil & Structural Engineers

PROJECT: THE WORLD TRADE CENTER | TITLE: CONNECTION DETAIL 363A, B | DATE: 5-22-67

REVISIONS
7-28-67
8-5-67
3-11-68

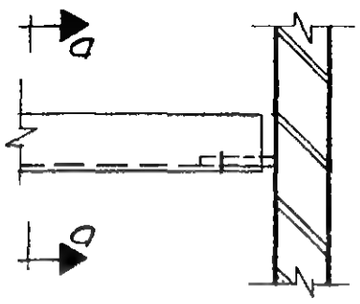

Plan - detail 363A
9" Channel Support

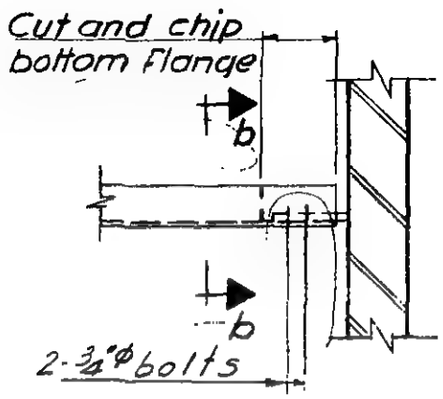

Plan - detail 363B
(5" or 6") Channel Support

SCHEDULE		
	363A	363B
PLATE		
P	½"	6 x ⅜" x 0'-6"
DIMENSION		
A	—	¾"
BOLTS		
K	2-⅞"ϕ	—
WELD		
①	—	5/16

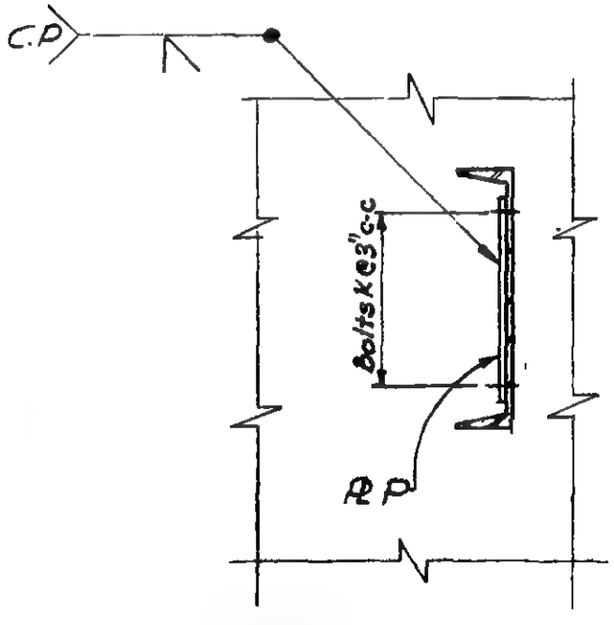

Section a-a

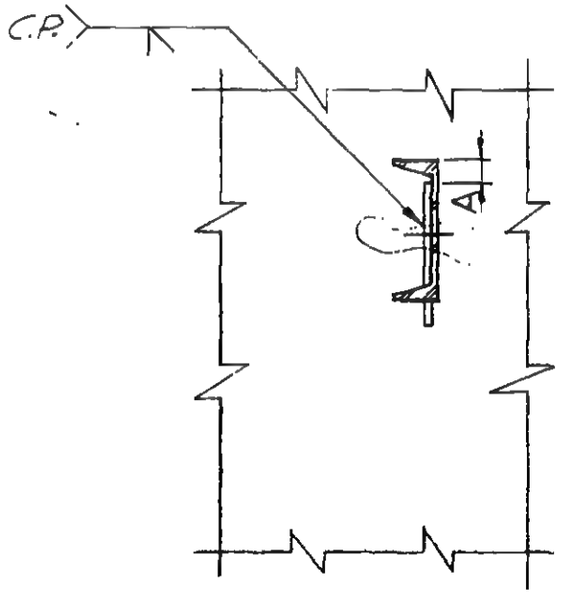

Section b-b

LICENSED PROFESSIONAL ENGINEER
LESLIE E. ROBERTSON
No. 34360
UNIVERSITY OF THE STATE OF NEW YORK

6-ABI-170

WORTHINGTON, SKILLING, HELLE & JACKSON — Civil & Structural Engineers

PROJECT	TITLE	DATE
THE WORLD TRADE CENTER	CONNECTION DETAIL 364 A, B, C	5-1-67

REVISIONS

6-30-67
7-28-67
8-5-67

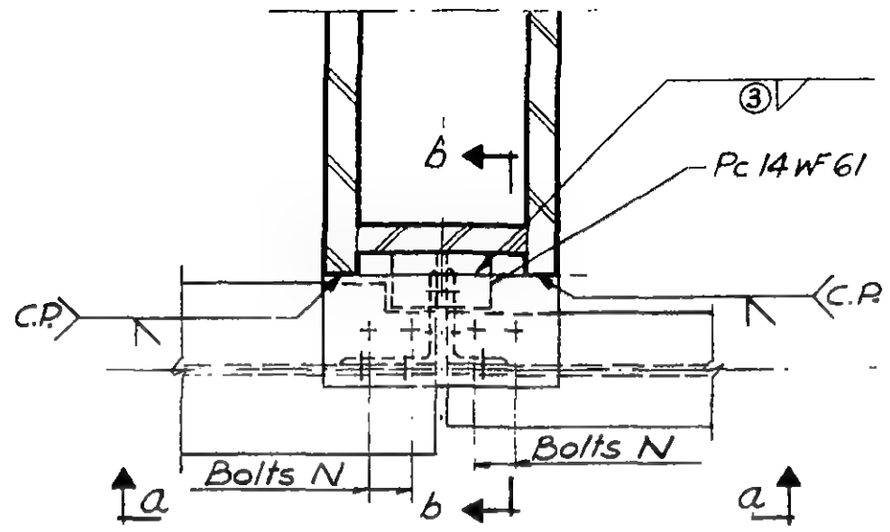

PLAN

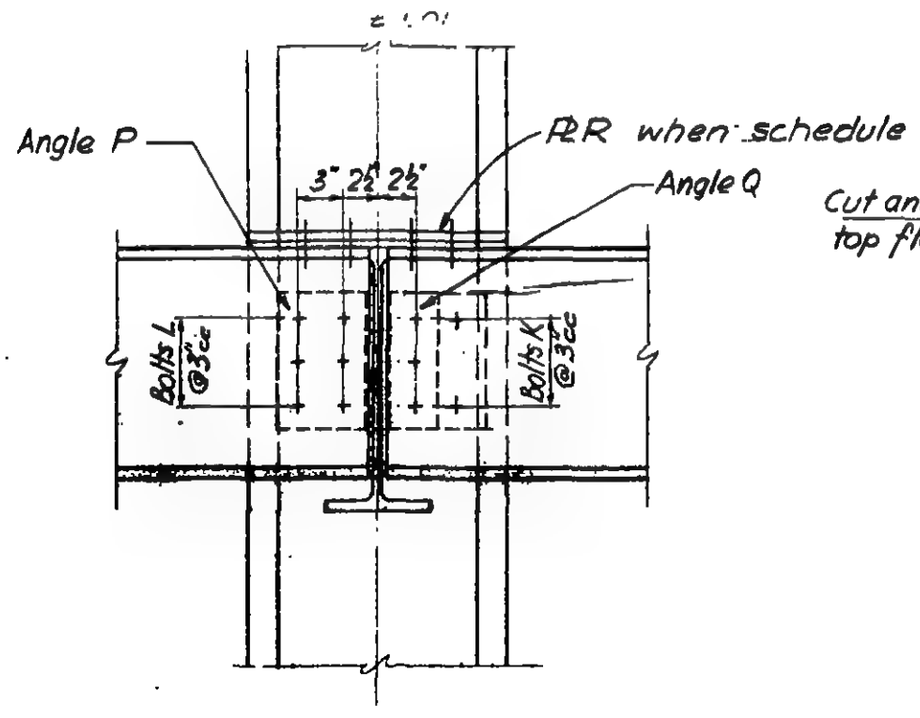

SECTION a-a

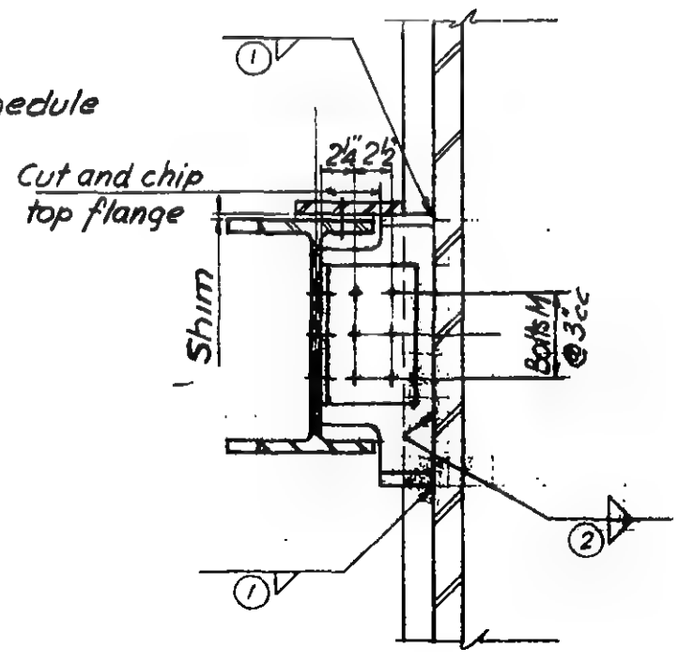

SECTION b-b

LICENSED PROFESSIONAL ENGINEER
LESLIE E. ROBERTSON
No. 34360
UNIVERSITY OF THE STATE OF NEW YORK

6-ABI-171

SKILLING - HELLE - CHRISTIANSEN - ROBERTSON Structural & Civil Engineers

PROJECT THE WORLD TRADE CENTER | TITLE SCHEDULE FOR DETAIL 364 A-F | DATE 6-30-67

REVISIONS
7-28-67
8-5-67
9-15-67
11-10-67

REF. DWG.	6-ABI-171	6-ABI-171	6-ABI-171	6-ABI-171.2	6-ABI-171.3	6-ABI-171.3
	364A	364B	364C	364D	364E	364F
PLATES						
R	—	3/4"	—	6"×3/8"×8 1/2	5/8"	1/2"
S	—	—	—	—	5/8"	1/2"
T	—	—	—	—	5/8"	1/2"
ANGLES						
P	6×6×3/8×C'-8 1/2	6×6×3/8×0'-8 1/2	6×6×3/8×0'-8 1/2	4×3 1/2×3/8×0-11 1/2	8×4×1/2	—
Q	6×4×7/16×0'-8 1/2	6×6×7/16×0'-8 1/2	6×6×3/8×0'-8 1/2	4×3 1/2×3/8×0'-5 1/2	—	—
DIMENSIONS						
A	—	—	—	—	1'-0"	1'-0"
BOLTS						
K	3-1"ϕ	6-7/8"ϕ	6-3/4"ϕ	2-3/4"ϕ	4-3/4"ϕ	—
L	6-7/8"ϕ	6-7/8"ϕ	6-3/4"ϕ	2-3/4"ϕ	6-7/8"ϕ	6-7/8"ϕ
M	6-7/8"ϕ	6-7/8"ϕ	6-3/4"ϕ	4-3/4"ϕ	—	—
N	—	2-7/8"ϕ	—	—	—	—
WELDS						
①	1/2	1/2	1/2	3/8	3/8	—
②	1/2	1/2	1/2	1/4	9/16	3/8
③	—	3/8	—	—	9/16	—
④	—	—	—	—	1/2	5/16

6-ABI-171.1

SKILLING - HELLE - CHRISTIANSEN - ROBERTSON Structural & Civil Engineers

PROJECT THE WORLD TRADE CENTER | TITLE CONNECTION DETAIL 364 D | DATE 8-5-67

REVISIONS

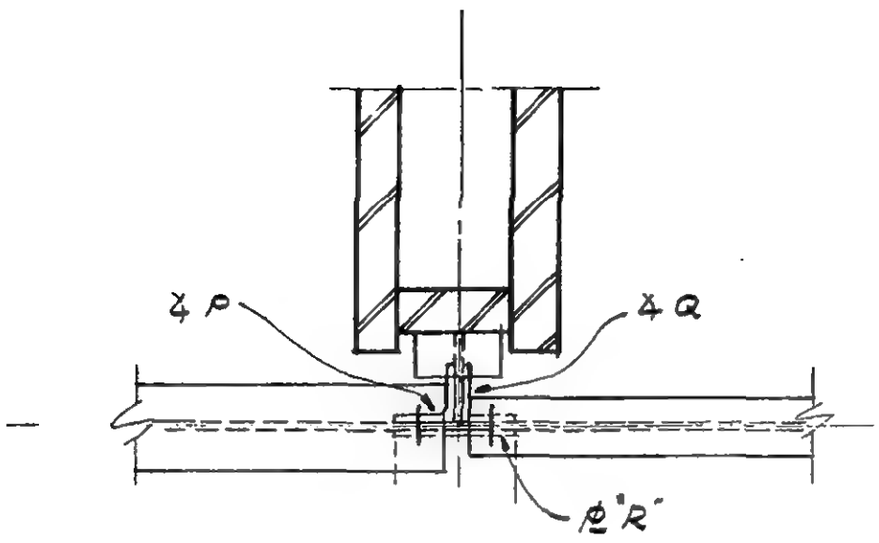

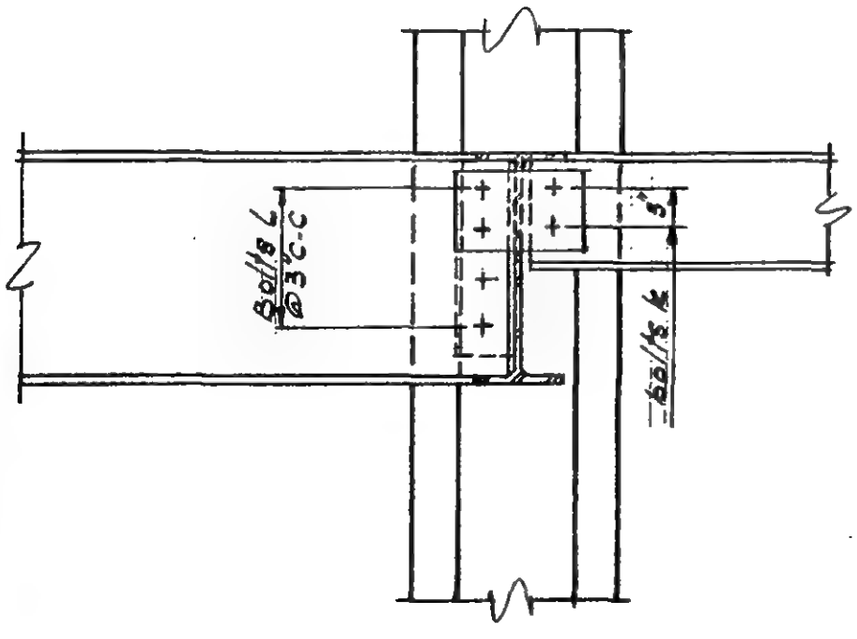

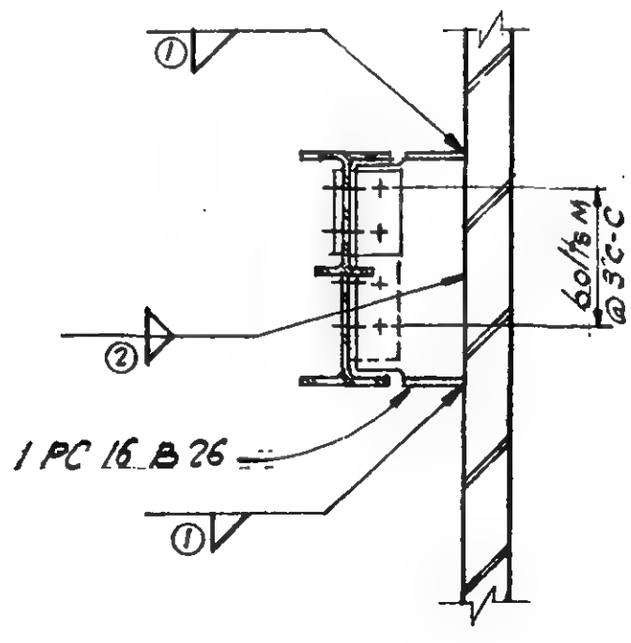

No. 24360
STATE OF THE STATE OF NEW YORK

6-AB1-171.2

SKILLING - HELLE - CHRISTIANSEN - ROBERTSON Structural & Civil Engineers

PROJECT THE WORLD TRADE CENTER | TITLE CONNECTION DETAIL 364E, F | DATE 9-15-67

REVISIONS

11-10-67

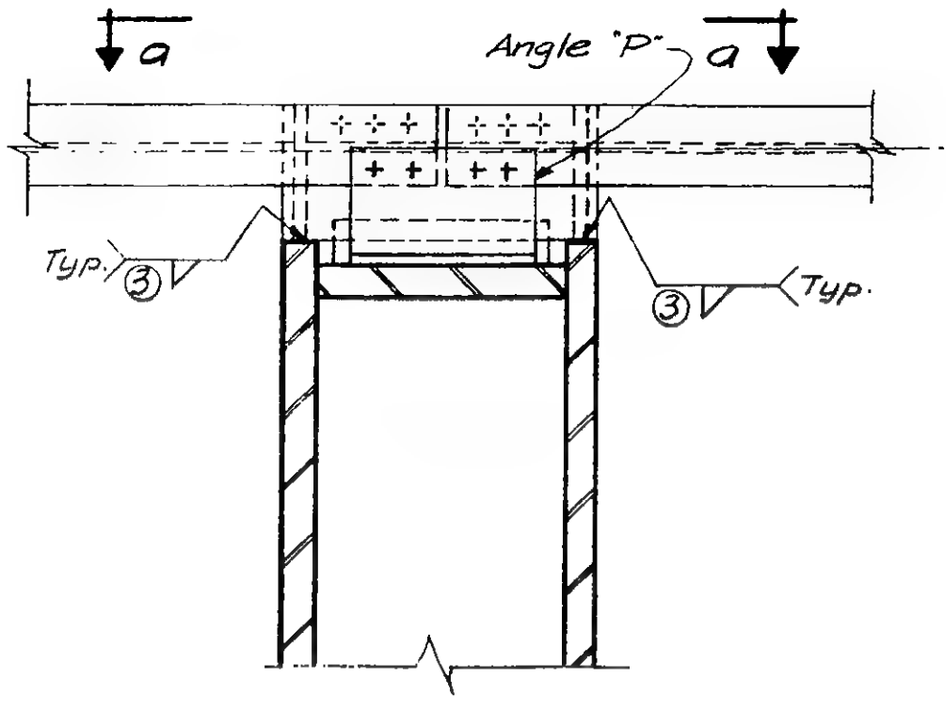

Plan
Detail 364E

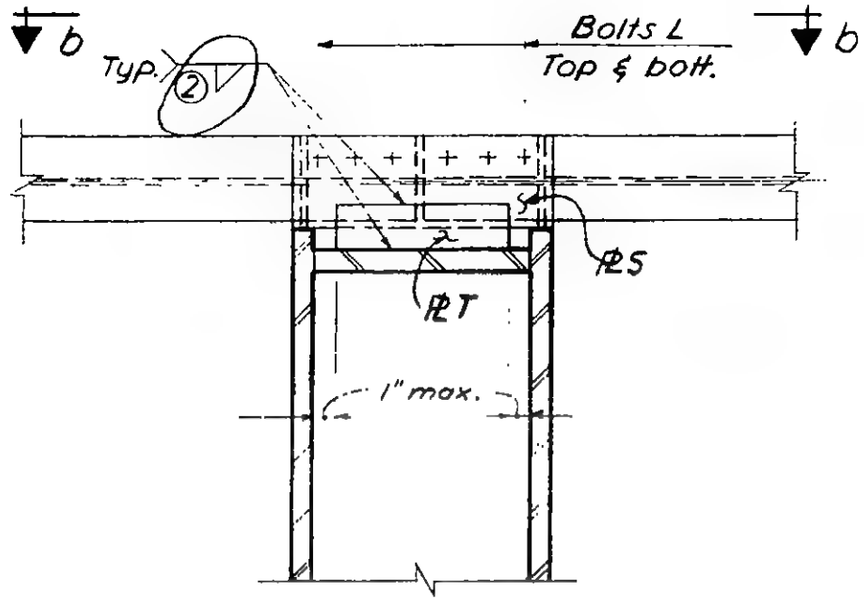

Plan
Detail 364F

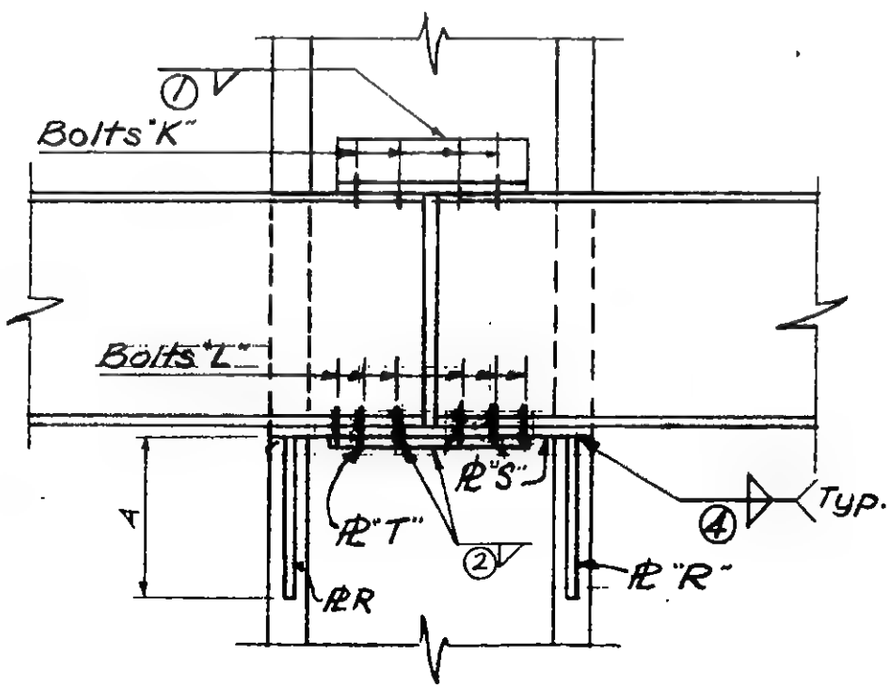

Section a-a

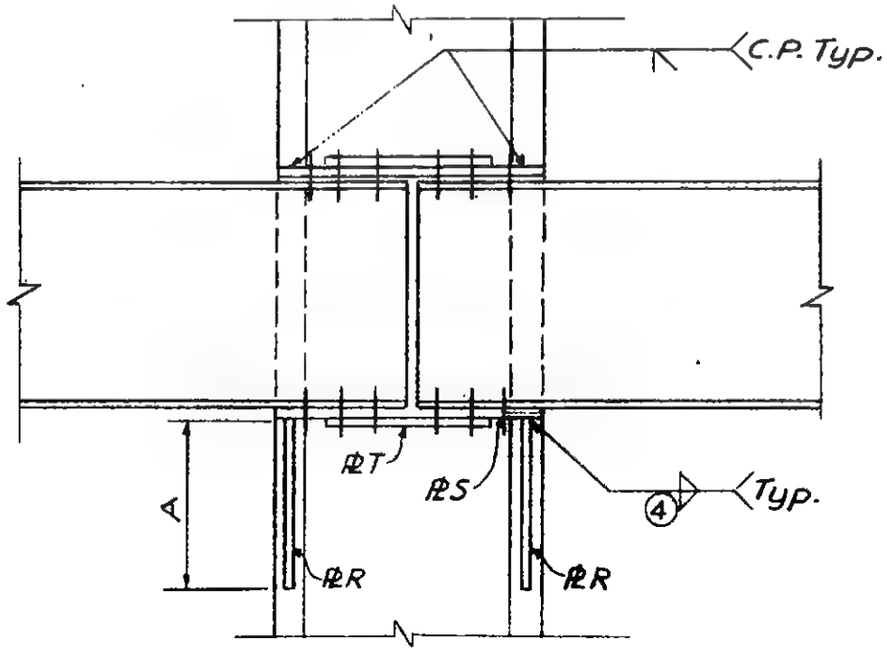

Section b-b

LICENSED PROFESSIONAL ENGINEER
LESLIE E. ROBERTSON
No. 34360
UNIVERSITY OF THE STATE OF NEW YORK

G-AB1-171.3

SKILLING - HELLE - CHRISTIANSEN - ROBERTSON Structural & Civil Engineers

PROJECT THE WORLD TRADE CENTER | TITLE CONNECTION DETAIL 364 G & H | DATE 2-9-68

REVISIONS

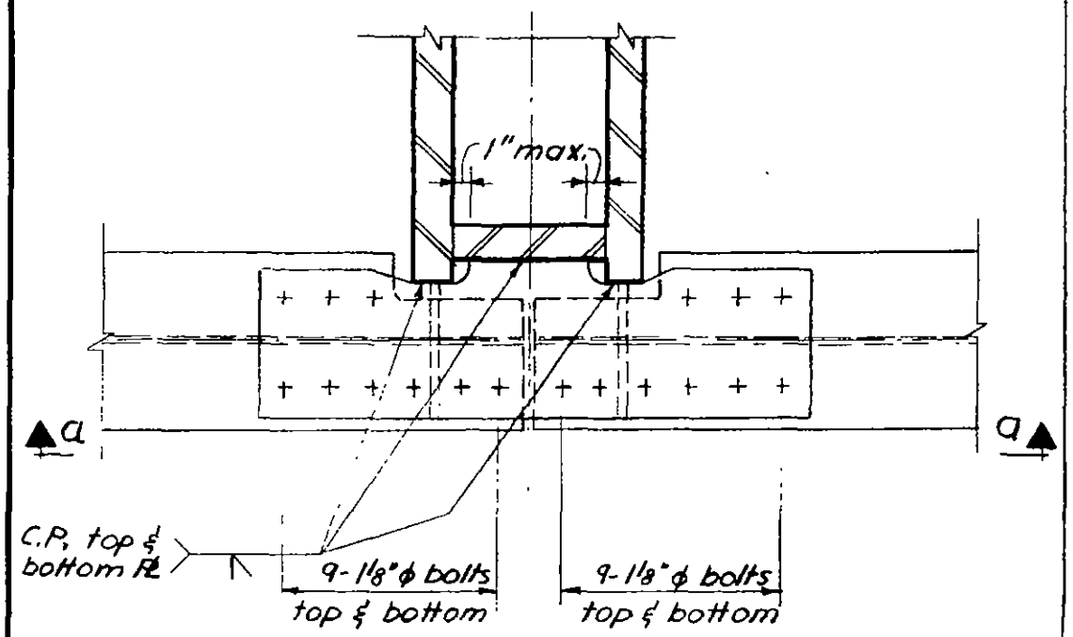

Plan

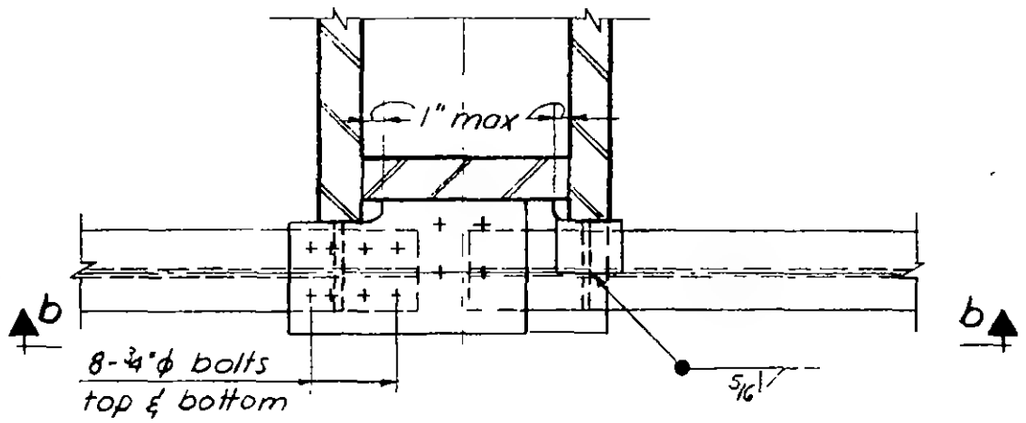

Plan

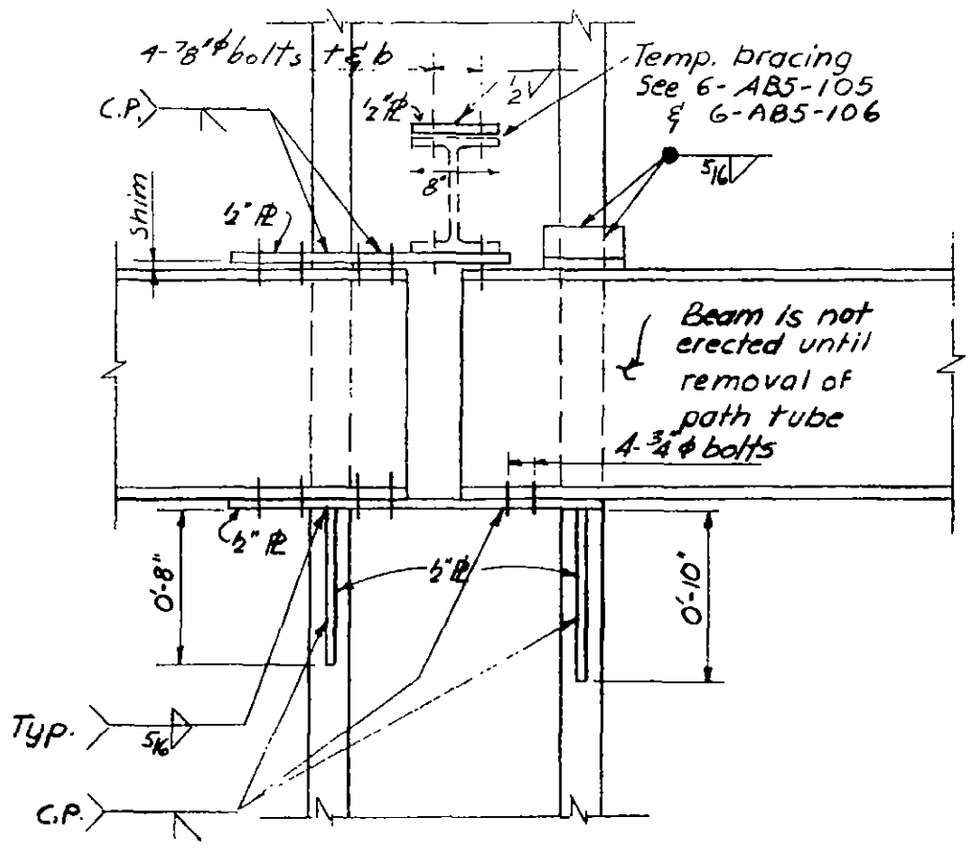

Section b-b

Detail 364 H

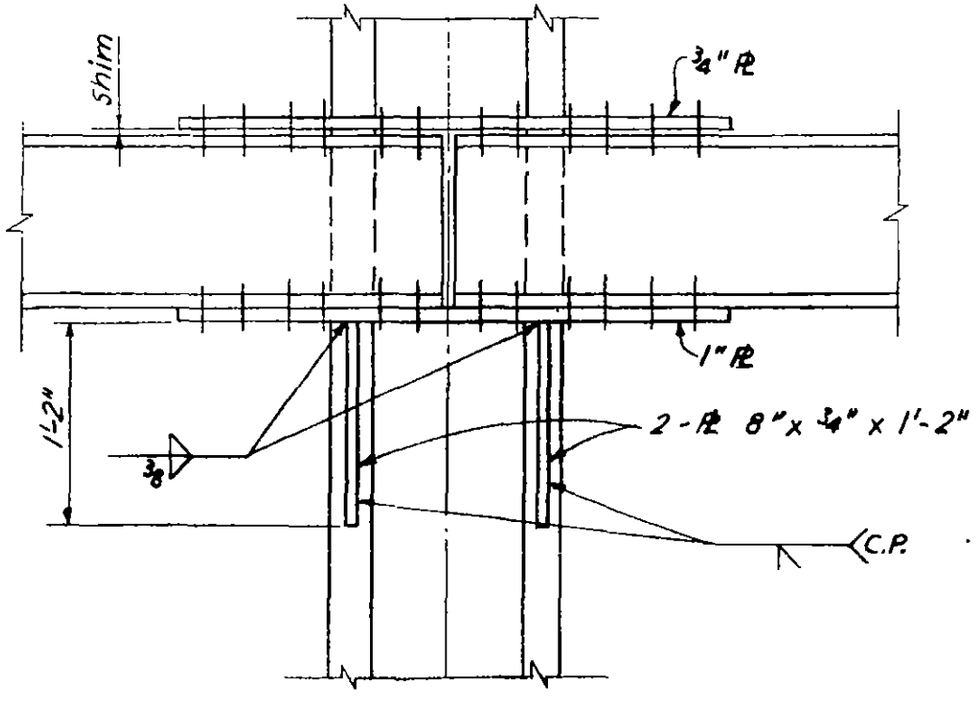

Section a-a

Detail 3646

LICENSED PROFESSIONAL ENGINEER
LESLIE E. ROBERTSON
No. 34360
UNIVERSITY OF THE STATE OF NEW YORK

6-AB1-171.4

SKILLING - HELLE - CHRISTIANSEN - ROBERTSON Structural & Civil Engineers

PROJECT THE WORLD TRADE CENTER | TITLE CONNECTION DETAIL 364 I, 364 J | DATE 2-9-68

REVISIONS

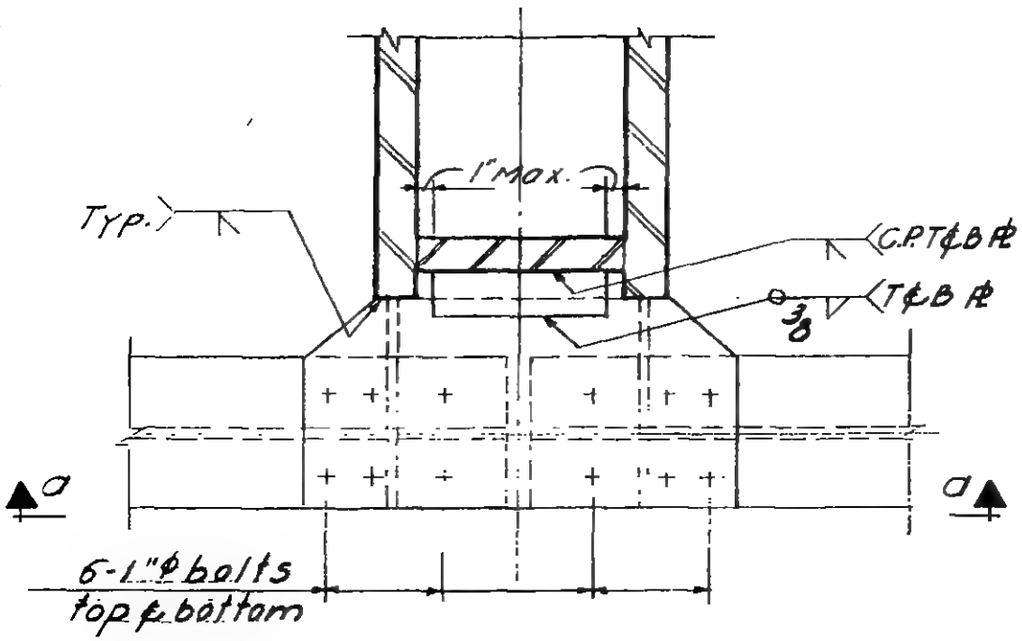

Plan 364 J

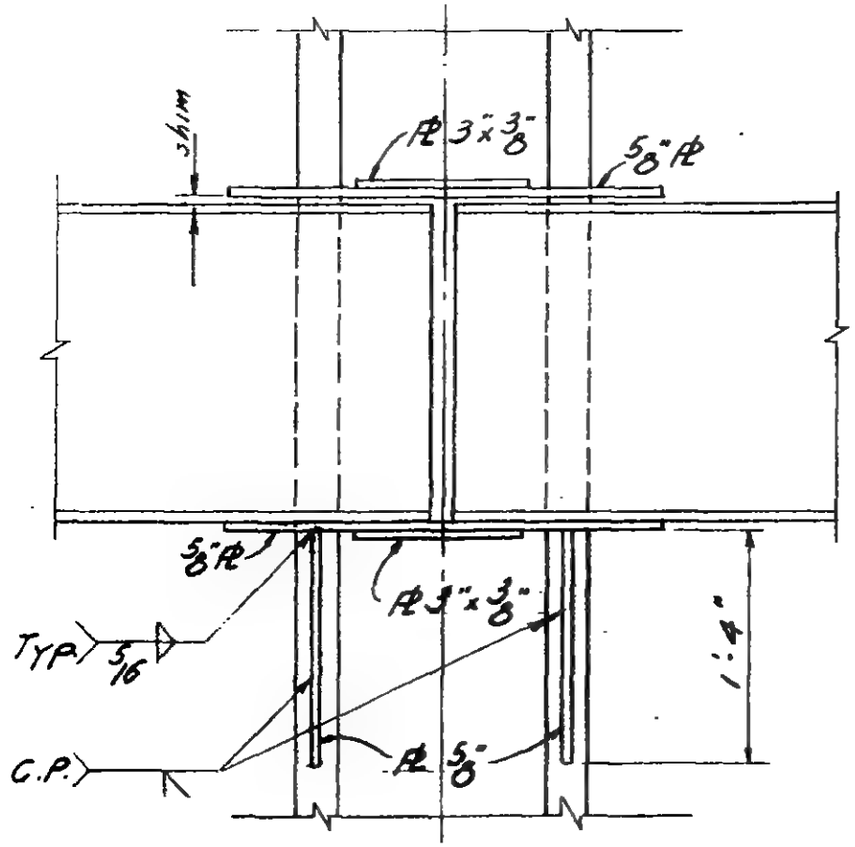

Section a-a

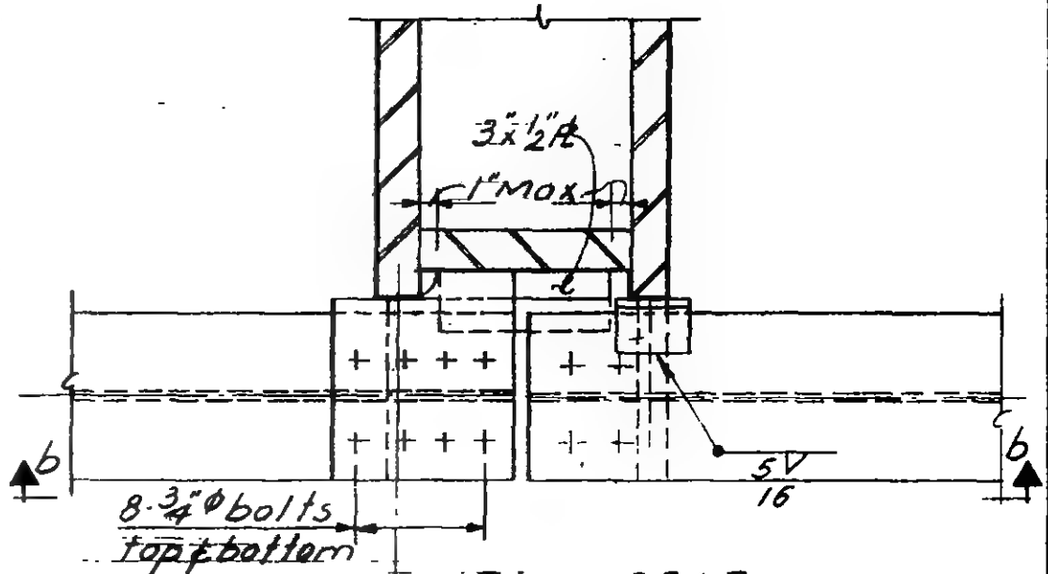

Plan 364 I

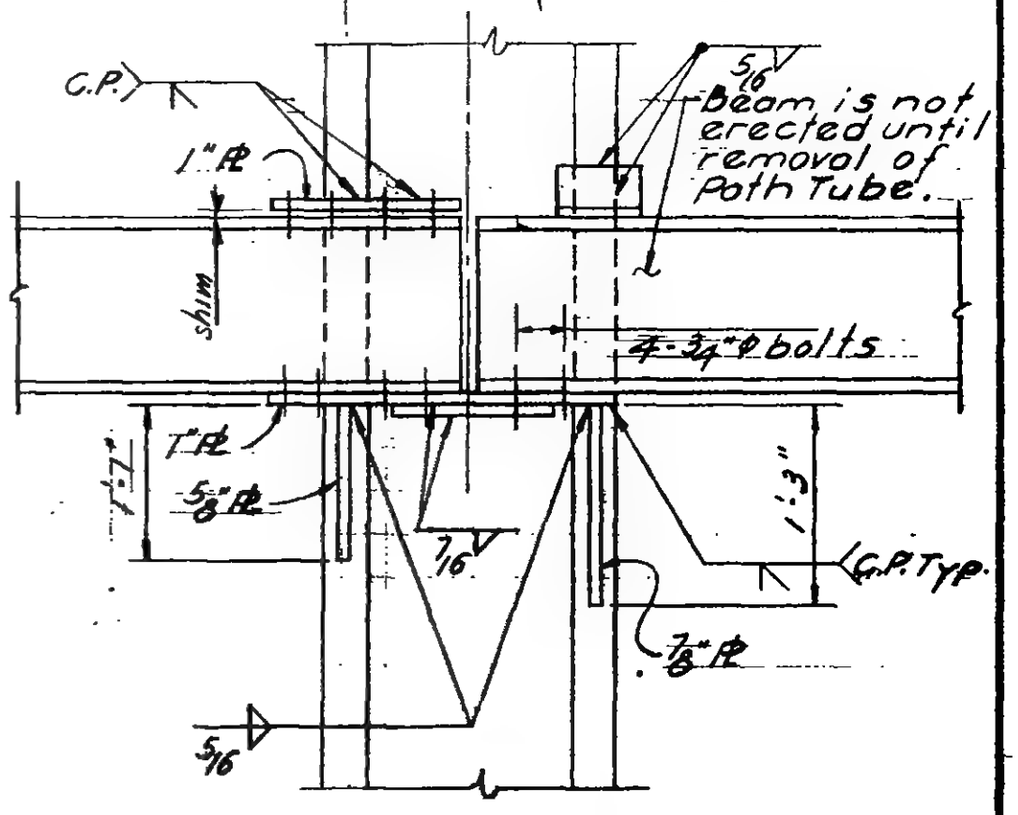

Section b-b

LICENSED PROFESSIONAL ENGINEER
LESLIE E. ROBERTSON
No. 34360
UNIVERSITY OF THE STATE OF NEW YORK

6-ABI-171.5

SKILLING - HELLE - CHRISTIANSEN - ROBERTSON Structural & Civil Engineers

PROJECT THE WORLD TRADE CENTER | TITLE CONNECTION DETAIL 364 K, 364 L | DATE 2-9-68

REVISIONS

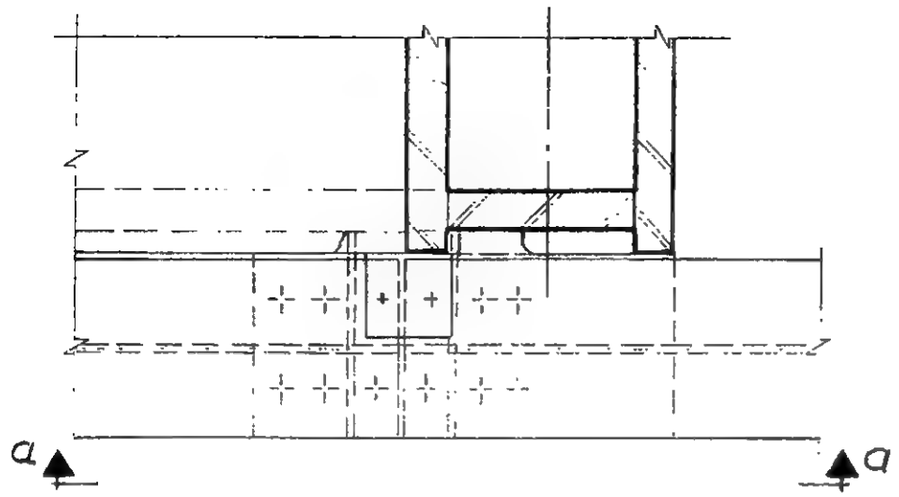

Plan (364K)

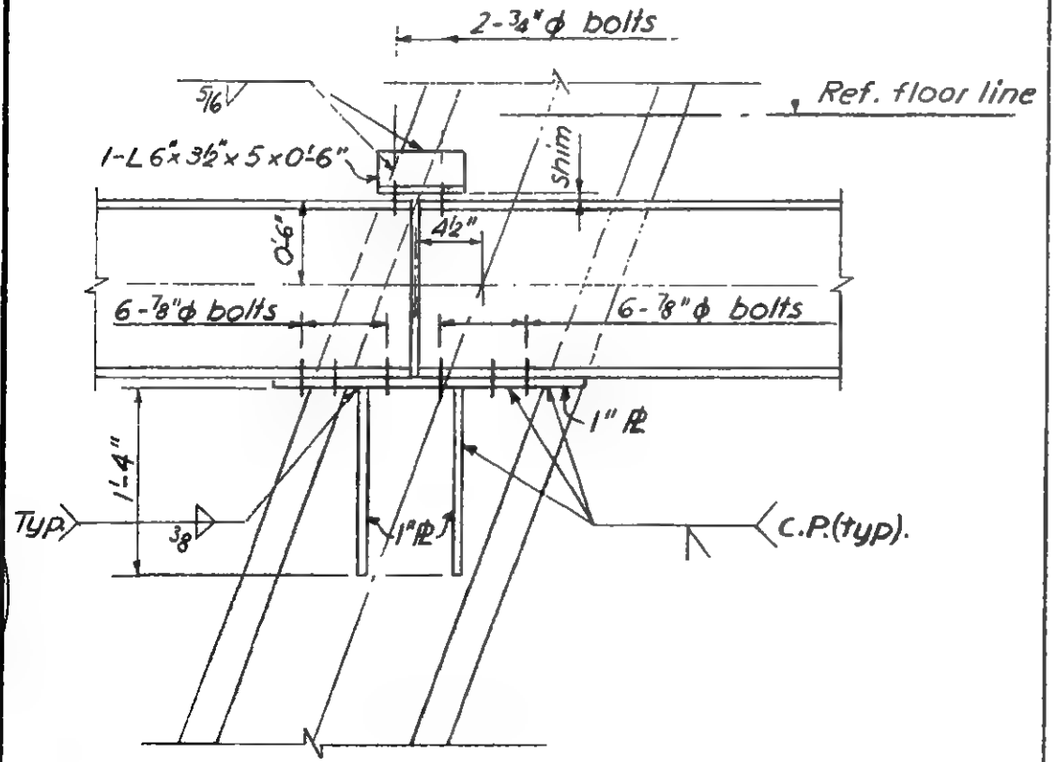

Section a-a

Detail 364 K

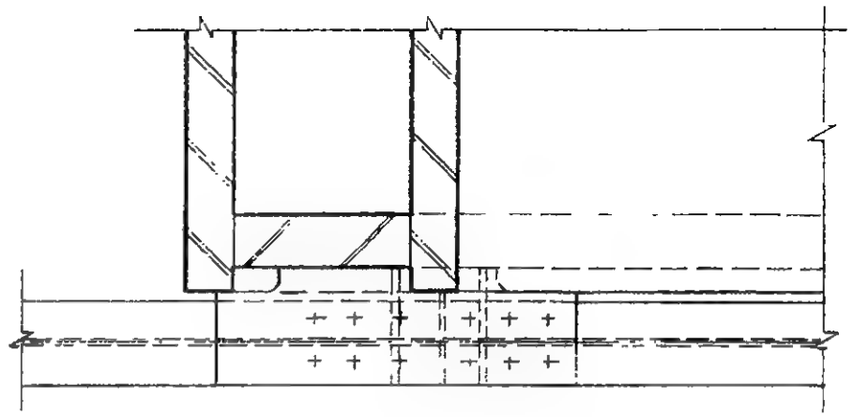

Plan(364L)

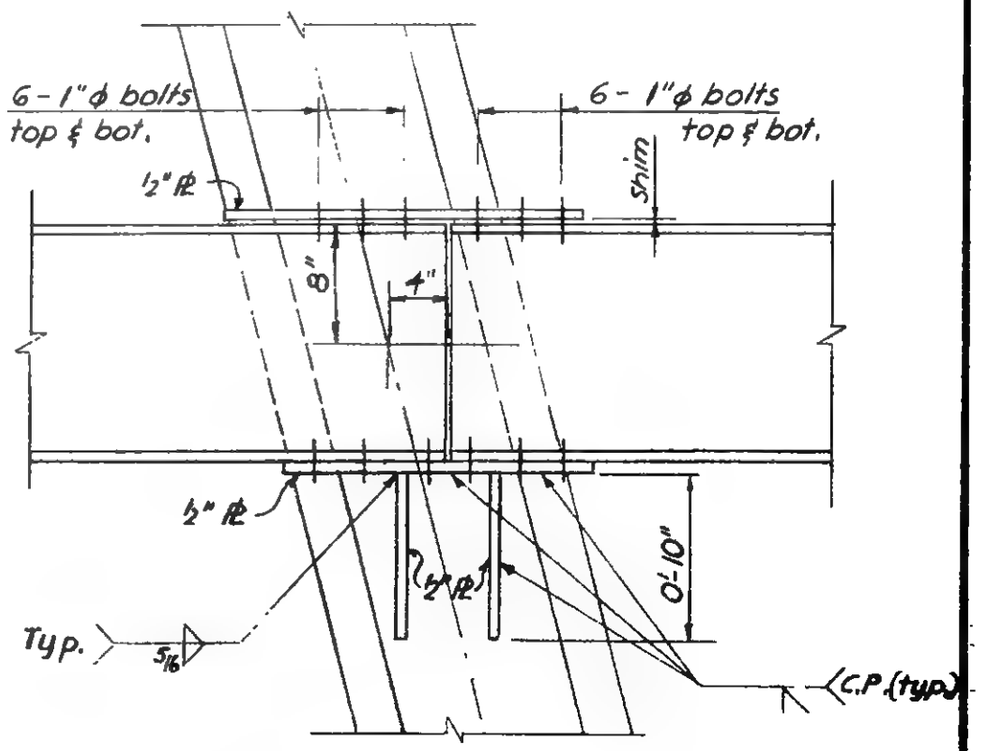

Section a-a

Detail 364 L

6-ABL-171.6

LICENSED PROFESSIONAL ENGINEER
LESLIE E. ROBERTSON
No. 34360
LICENSED BY THE STATE OF NEW YORK

SKILLING - HELLE - CHRISTIANSEN - ROBERTSON Structural & Civil Engineers

PROJECT THE WORLD TRADE CENTER | TITLE CONNECTION DETAIL 364 M | DATE 2-9-68

REVISIONS

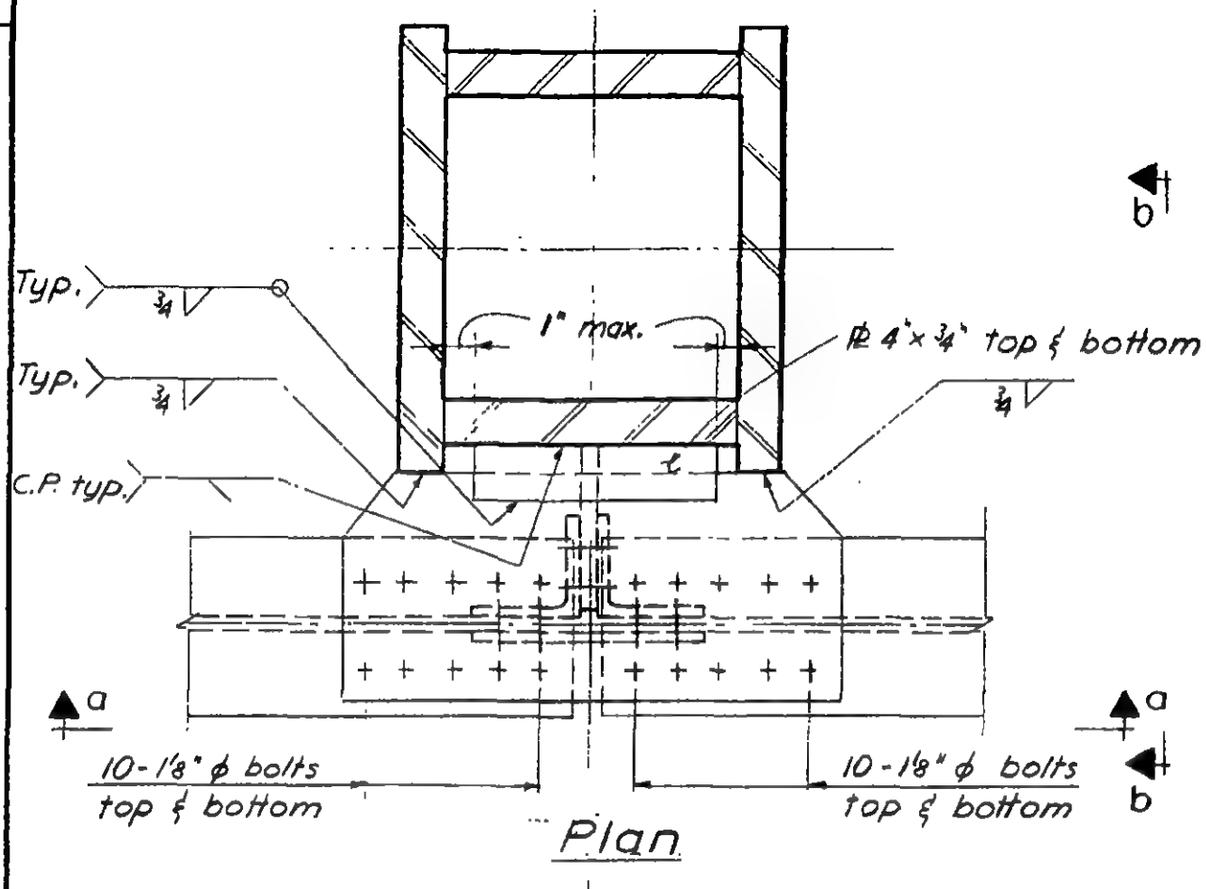

Plan

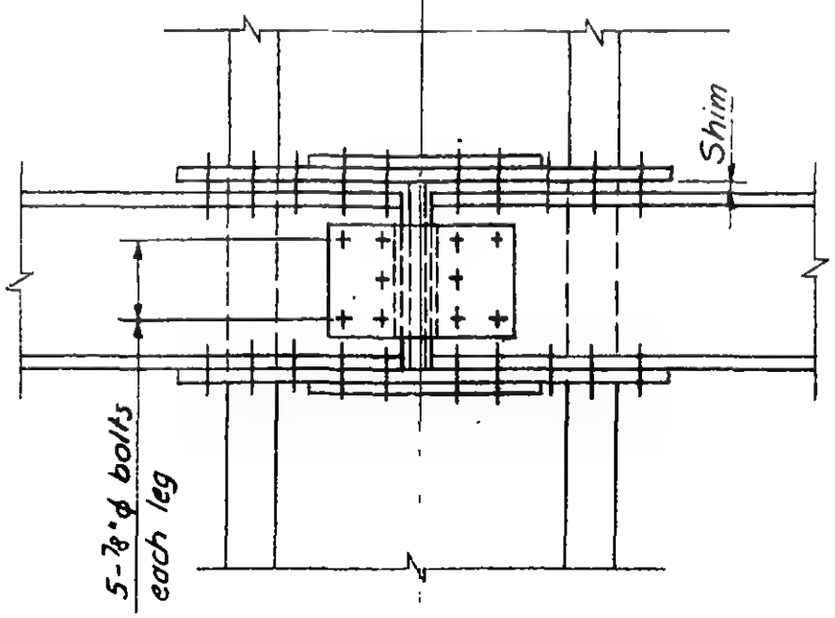

Section a-a

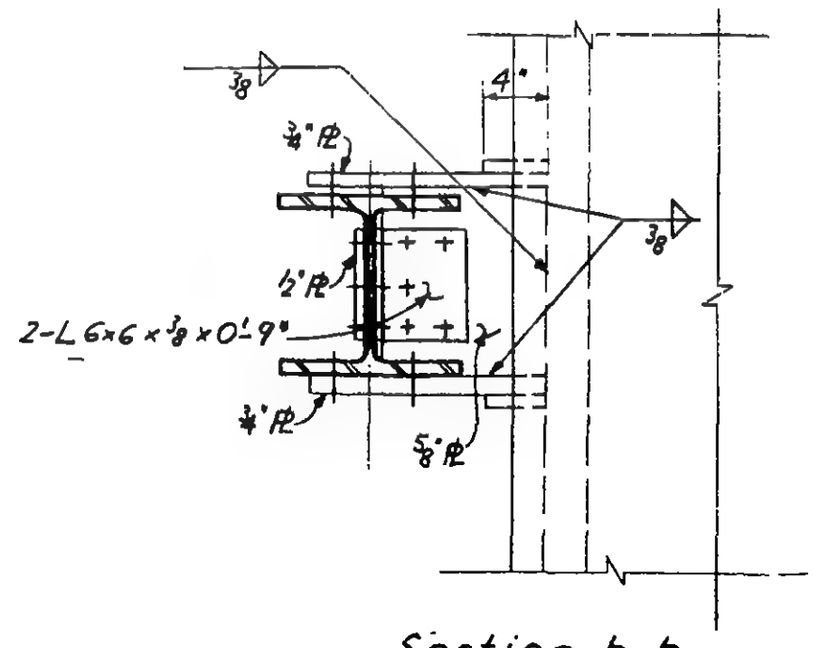

Section b-b

LICENSED PROFESSIONAL ENGINEER
LESLIE E. ROBERTSON
No. 34360
UNIVERSITY OF THE STATE OF NEW YORK

6-AB1-171.7

WORTHINGTON, SKILLING, HELLE & JACKSON — Civil & Structural Engineers

PROJECT THE WORLD TRADE CENTER | TITLE CONNECTION DETAIL 365A | DATE 5-1-67

REVISIONS

7-28-67

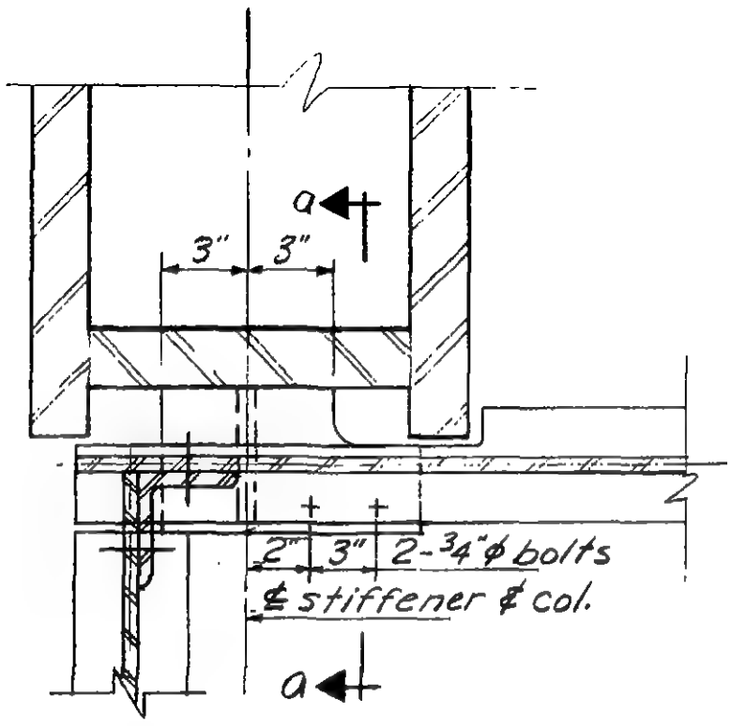

PLAN

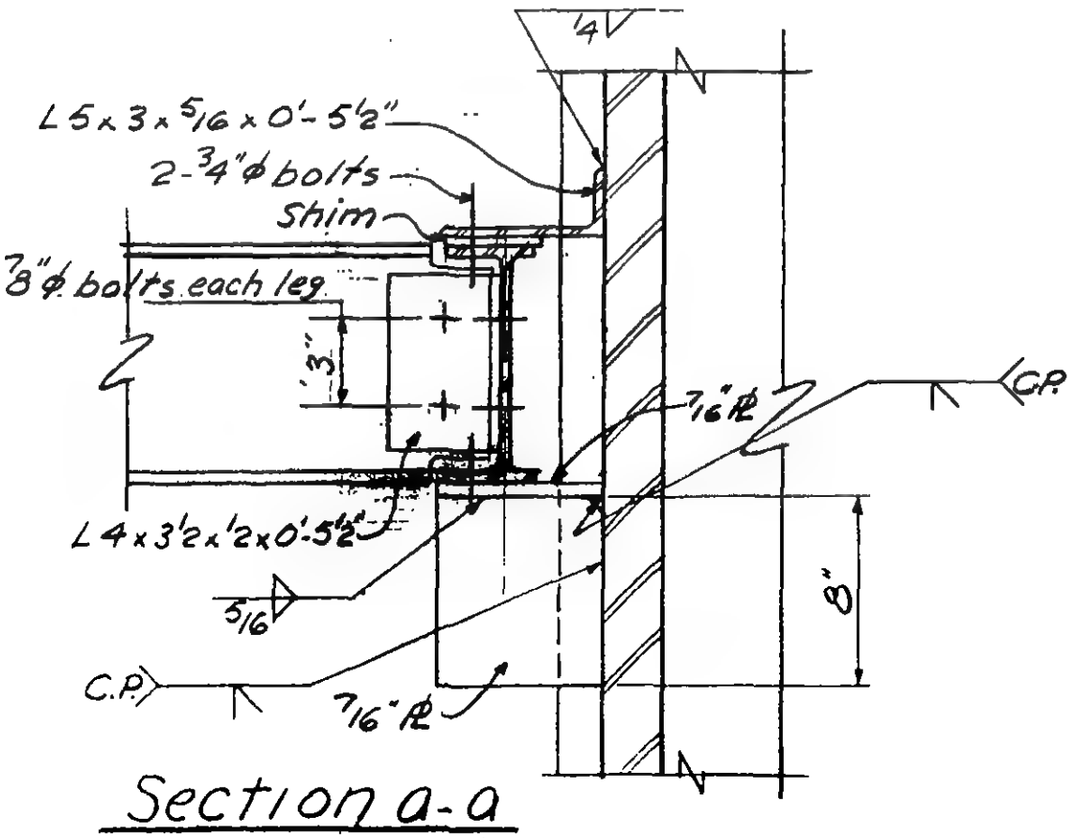

Section a-a

LICENSED PROFESSIONAL ENGINEER LESLIE E. ROBERTSON No. 34360 UNIVERSITY OF THE STATE OF NEW YORK

6-ABI-172

WORTHINGTON, SKILLING, HELLE & JACKSON — Civil & Structural Engineers

PROJECT THE WORLD TRADE CENTER | TITLE CONNECTION DETAIL 366 A,B,C | DATE 5-1-67

REVISIONS

8-5-67
9-15-67
11-10-67
12-7-67

366 B,C

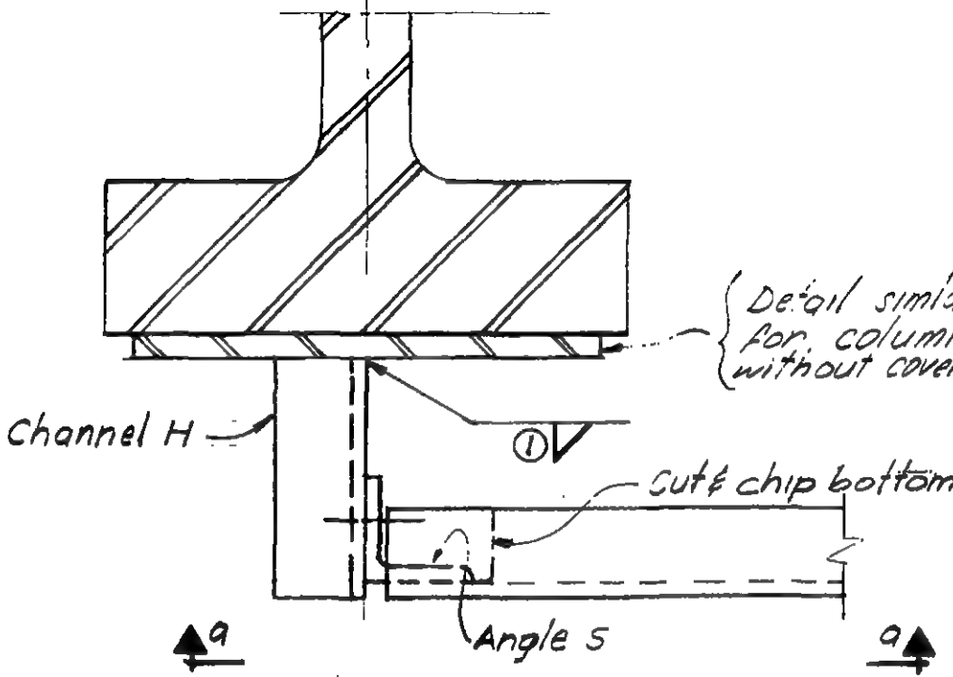

366 A

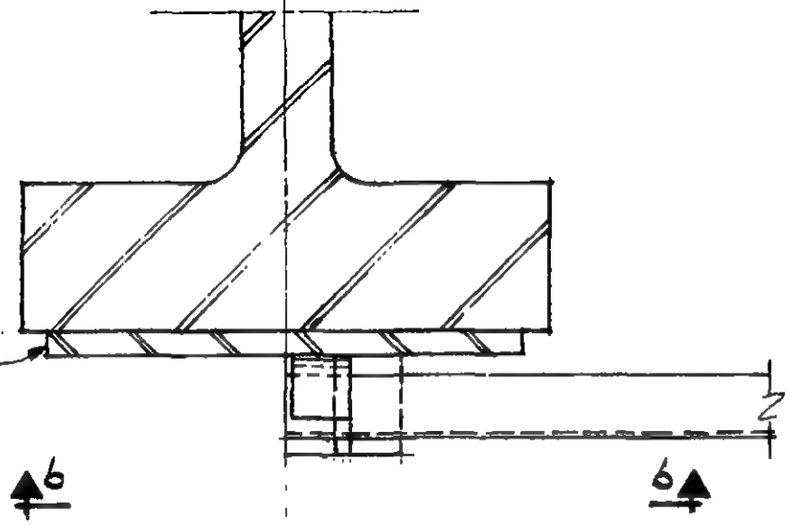

PLAN

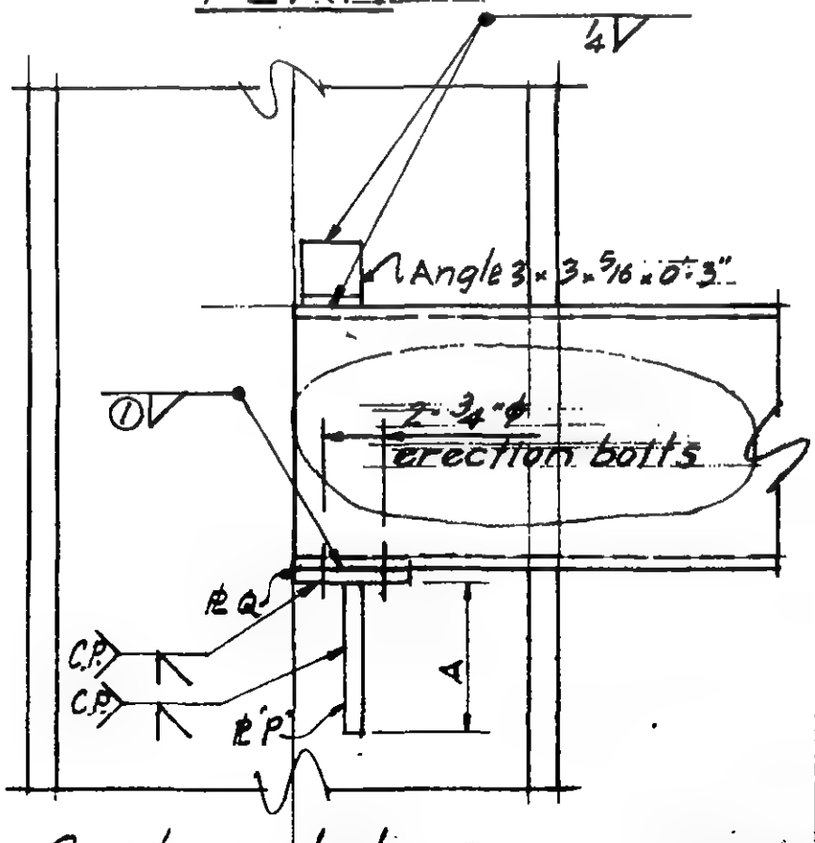

PLAN

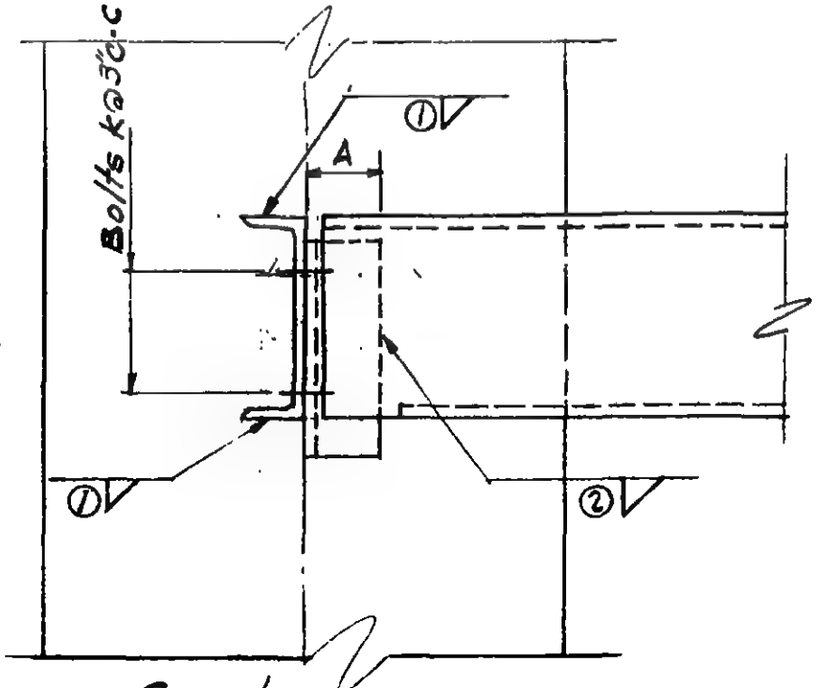

Section a-a

Section b-b

6-ABI-1

SKILLING - HELLE - CHRISTIANSEN - ROBERTSON Structural & Civil Engineers

PROJECT THE WORLD TRADE CENTER | TITLE SCHEDULE FOR DETAIL A - C | DATE 8-5-67

REVISIONS
9-15-67
11-10-67

	366 A	366 B	366 C			
CHANNEL						
H	—	8 C 11.5	9 C 13.4			
PLATES						
P	1/2"	—				
Q	1/2"	—				
ANGLE						
S		3 1/2 x 3 x 3/8	3 1/2 x 3 x 3/8			
DIMENSIONS						
A	0'-10	0'-3"	0'-3"			
BOLTS						
K	—	2-3/4" ϕ	2-7/8" ϕ			
WELD						
1	5/16	5/16	5/16			
2	—	5/16	5/16			

PROFESSIONAL ENGINEER ROBERTSON No. 34360 REGISTERED IN THE STATE OF NEW YORK

6-AB1-173.1

WORTHINGTON, SKILLING, HELLE & JACKSON — Civil & Structural Engineers

PROJECT: THE WORLD TRADE CENTER | TITLE: CONNECTION DETAIL 368 A,B,C,D,E,F | DATE: 5-22-67

REVISIONS

7-28-67
9-15-67
10-2-67
10-31-67
11-10-67

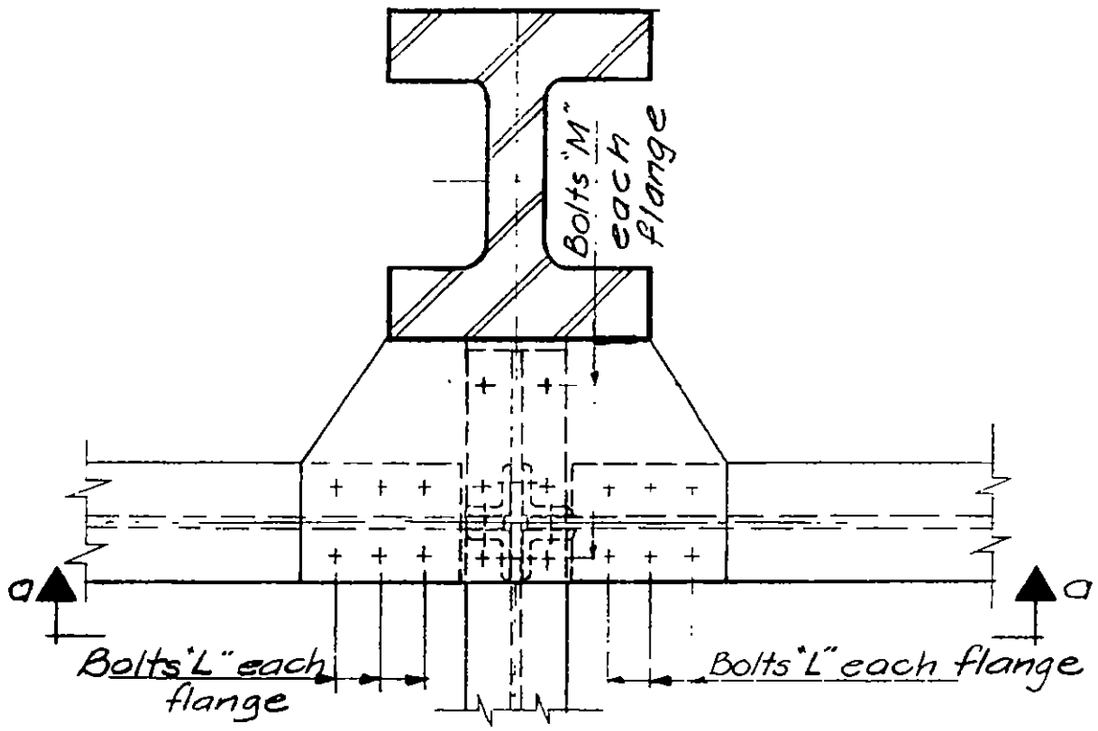

Plan

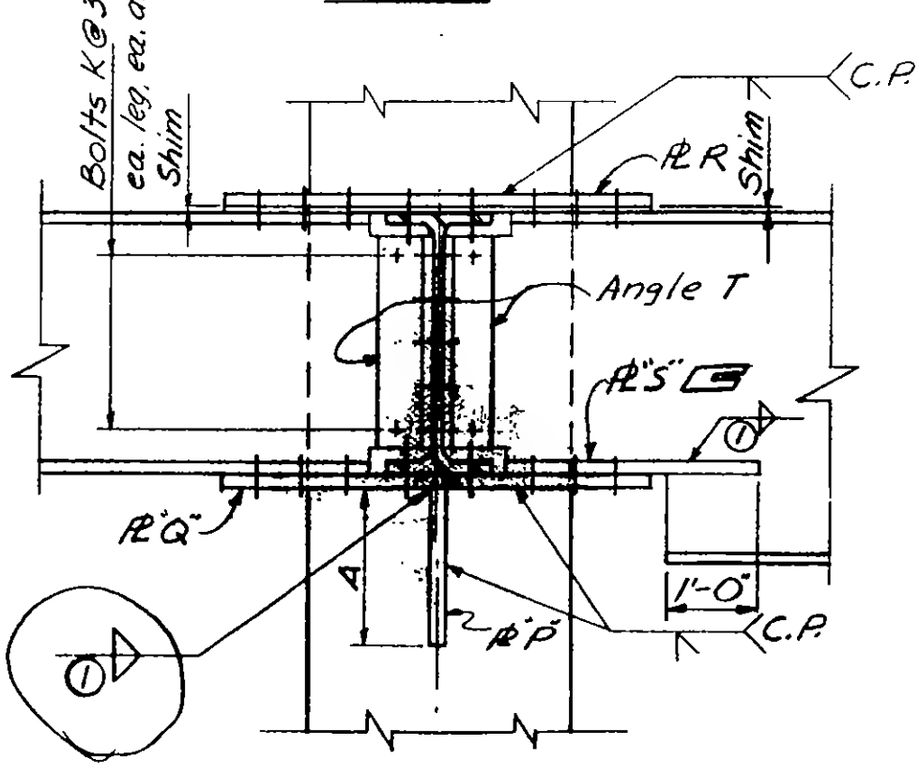

Section a-a
Det. 368A

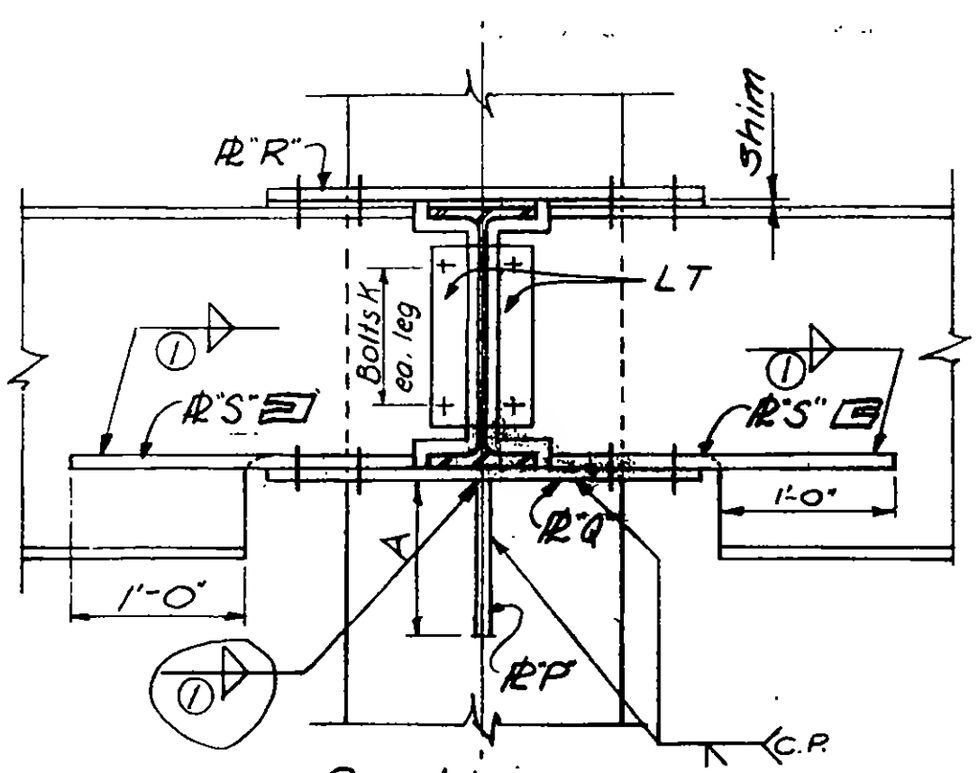

Section a-a
Det. 368 B,C,D,E,F

G[redacted]-175

LICENSED PROFESSIONAL ENGINEER
LESLIE E. ROBERTSON
No. 34360
UNIVERSITY OF THE STATE OF NEW YORK

SKILLING - HELLE - CHRISTIANSEN - ROBERTSON — Structural & Civil Engineers

PROJECT THE WORLD TRADE CENTER | TITLE SCHEDULE FOR DETAIL 368 A, B, C, D, E, F | DATE 7-28-67

REVISIONS
9-15-67
10-2-67
10-31-67
11-10-67

	368 A	368 B, C	368 D	368 E, F
PLATES				
P	8½" × 5/8"	8" × ¾"	8" × 1"	8" × 1½"
Q	5/8"	¾"	¾"	1½"
R	5/16"	5/8"	5/8"	½"
S	7" × 5/8"	7" × 5/8"	7" × 5/8"	9 × ¾"
ANGLES				
T	4 × 3½ × 5/16	4 × 3½ × 5/16	4 × 3½ × 7/16	4 × 3½ × 5/16
DIMENSIONS				
A	1'-2	1'-2"	1'-2"	1'-8"
BOLTS				
K	3 - ¾" ϕ	3 - ¾" ϕ	3 - 1" ϕ	4 - ¾" ϕ
L	6 - ⅞" ϕ	6 - ¾" ϕ	6 - ¾" ϕ	6 - ¾" ϕ
M	6 - ⅞" ϕ	8 - ¾" ϕ	8 - ¾" ϕ	6 - ⅞" ϕ
WELDS				
①	5/16	5/16	5/16	5/16

LICENSED PROFESSIONAL ENGINEER
LESLIE E. ROBERTSON
No. 34360
UNIVERSITY OF THE STATE OF NEW YORK

6-AB1-175.1

WORTHINGTON, SKILLING, HELLE & JACKSON — Civil & Structural Engineers

PROJECT THE WORLD TRADE CENTER | TITLE CONNECTION DETAIL 369 A,B | DATE 5-22-67

REVISIONS

10-2-67

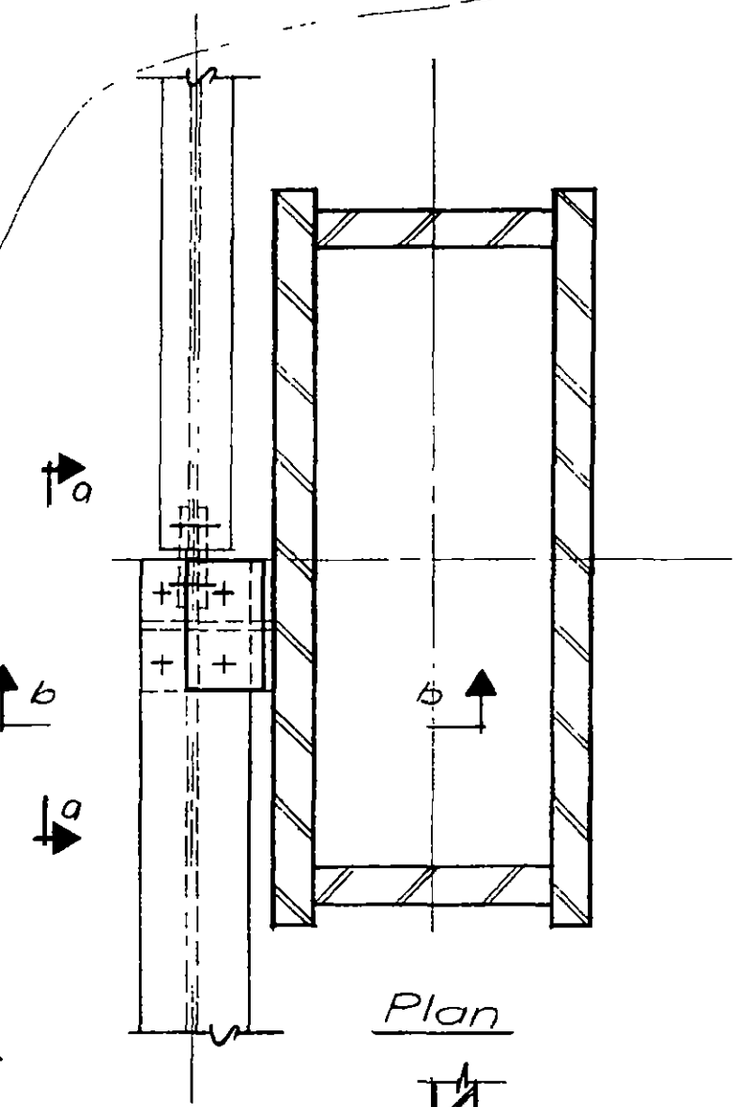

Plan

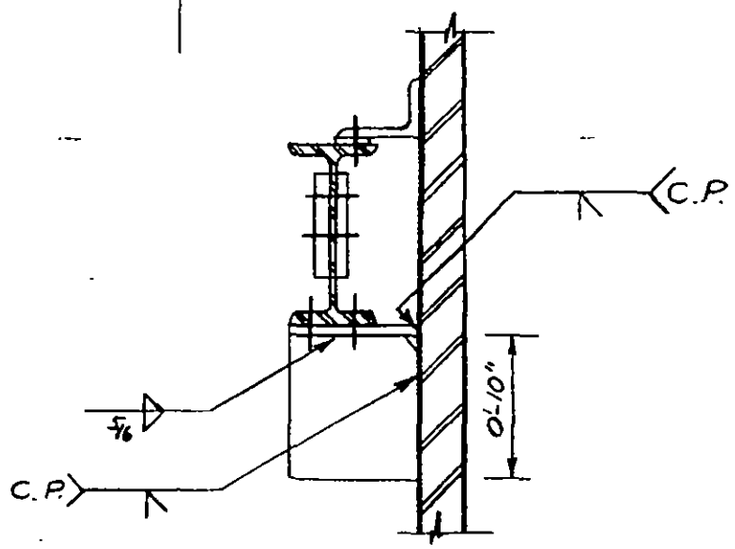

Section b-b

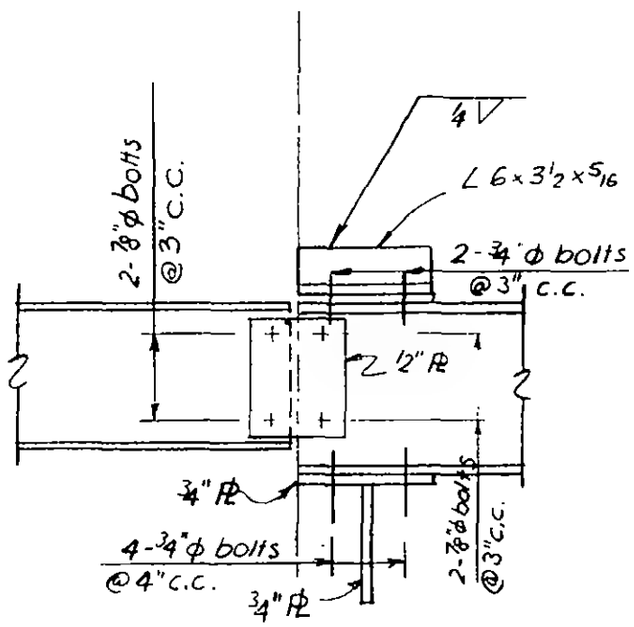

Section a-a (For 369B)

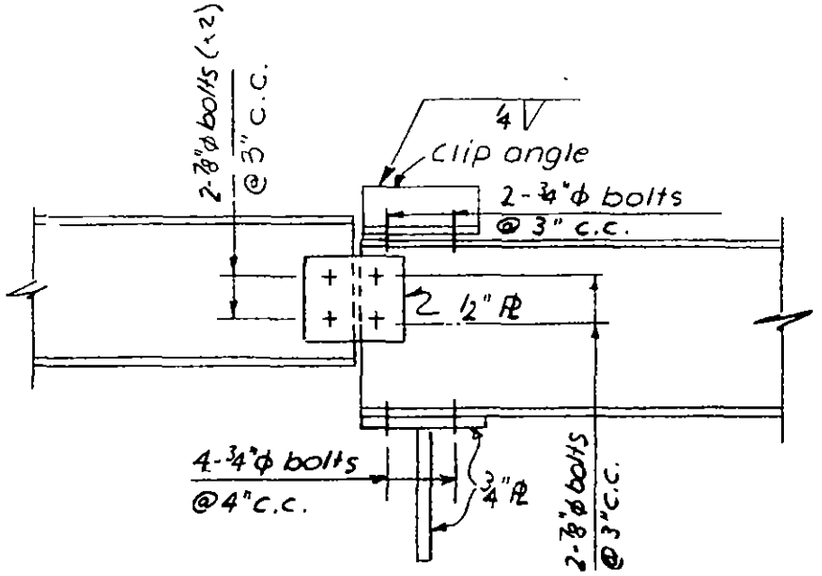

Section a-a (For 369A)

LICENSED PROFESSIONAL ENGINEER LESLIE E. ROBERTSON No. 34360 UNIVERSITY OF THE STATE OF NEW YORK

6-AB1-176

WORTHINGTON, SKILLING, HELLE & JACKSON — Civil & Structural Engineers

PROJECT: THE WORLD TRADE CENTER | TITLE: CONNECTION DETAIL 370 A THRU I, K, L, M | DATE: 5-22-67

REVISIONS

6-30-67
7-28-67
8-5-67
9-15-67
10-2-67
11-10-67
2-9-68

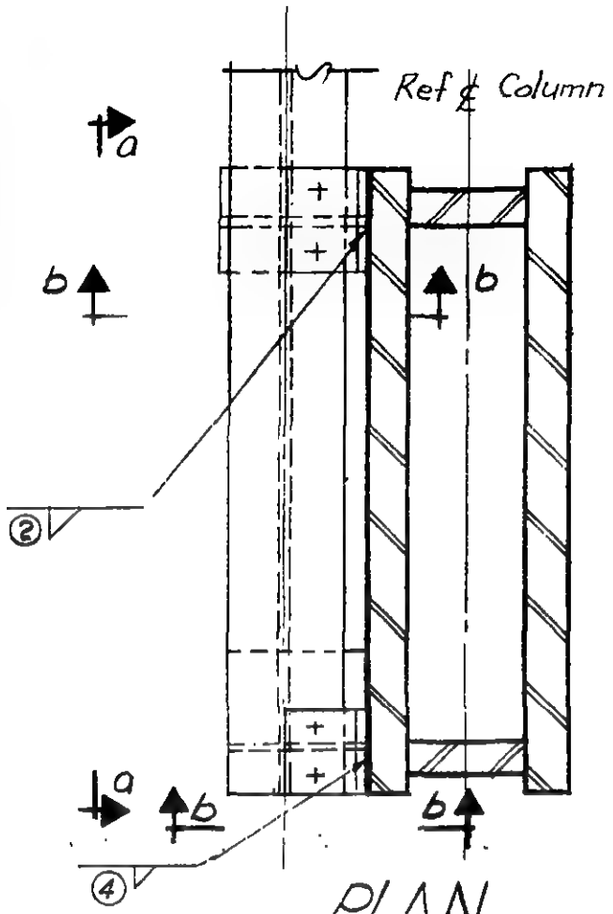

PLAN

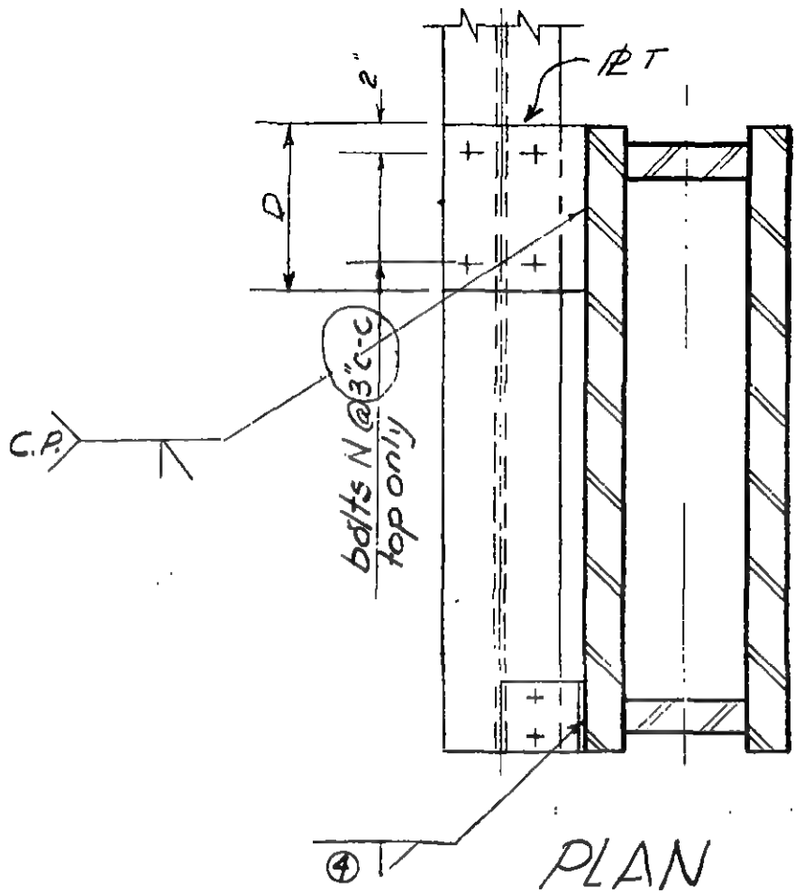

PLAN

Where ℞ T is scheduled

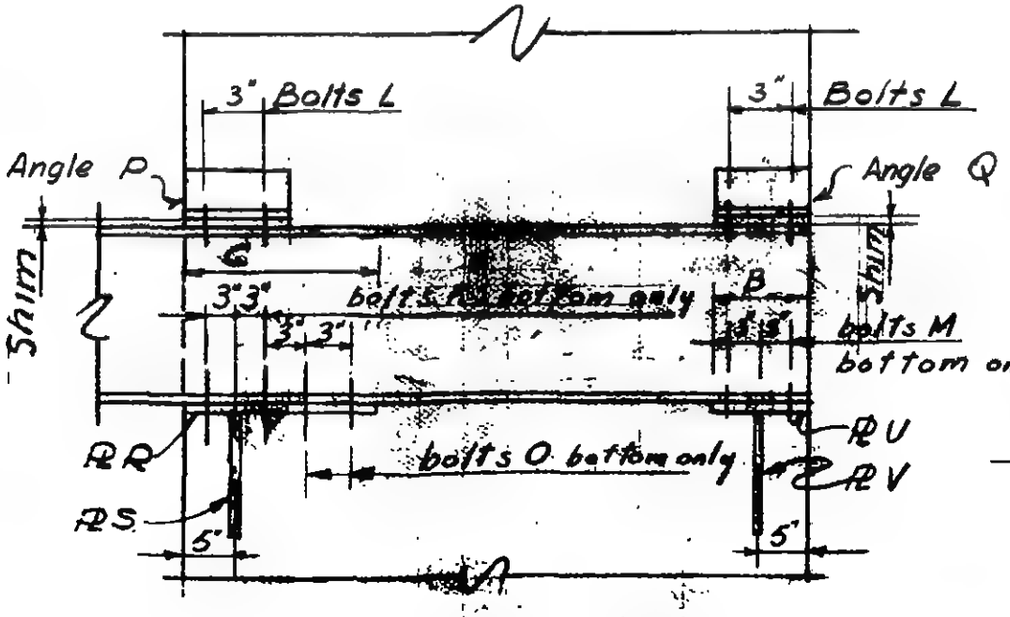

Section a-a

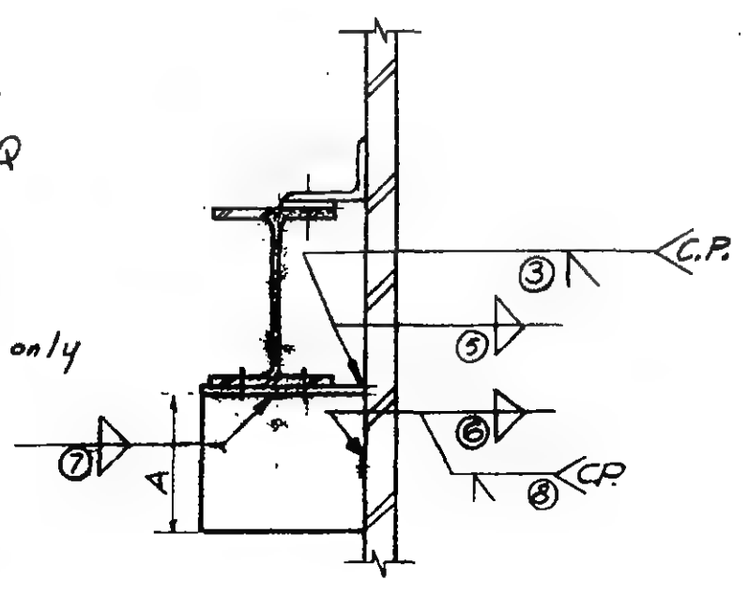

Section b-b

6-ABI-177

LICENSED PROFESSIONAL ENGINEER — LESLIE E. ROBERTSON — No. 31350 — STATE OF NEW YORK

WORTHINGTON, SKILLING, HELLE & JACKSON — Civil & Structural Engineers

PROJECT THE WORLD TRADE CENTER | TITLE SCHEDULE FOR DETAIL 370 A-F | DATE 6-30-67

REVISIONS

7-28-67

8-5-67

	370A	370B	370C	370D	370E	370F
PLATES						
R	1/2"	5/8"	5/8"	5/8"	3/4"	3/4"
S	3/8"	1/2"	5/8"	5/8"	3/4"	3/4"
T	—	—	—	—	—	—
U	—	—	—	—	3/4"	3/4"
V	—	—	—	—	3/4"	3/4"
ANGLES						
P	6x4x5/16x0'-6"	6x4x5/16x0'-6"	6x4x5/16x0'-6"	6x4x5/16x0'-6"	6x4x5/16x0'-6"	6x4x5/16x0'-6"
Q	6x4x5/16x0'-6"	6x4x3/8x0'-4"	6x4x5/16x0'-6"	6x4x5/16x0'-6"	6x4x5/16x0'-6"	6x4x5/16x0'-6"
DIMENSIONS						
A	0'-10"	1'-0"	1'-0"	1'-0"	1'-2"	1'-4"
B	—	—	—	—	0'-9"	0'-9"
C	1'-1"	1'-1"	1'-1"	0'-9"	0'-9"	0'-9"
BOLTS						
K	4-7/8"ϕ	4-7/8"ϕ	4-7/8"ϕ	4-3/4"ϕ	4-3/4"ϕ	4-3/4"ϕ
L	2-3/4"ϕ	2-3/4"ϕ	2-3/4"ϕ	2-3/4"ϕ	2-3/4"ϕ	4-3/4"ϕ
M	—	—	—	—	4-3/4"ϕ	4-3/4"ϕ
O	—	—	—	—	—	—
WELDS						
①	—	—	—	—	—	—
②	1/4	1/4	1/4	1/4	1/4	1/4
③	—	—	—	—	—	—
④	1/4	5/16	1/4	1/4	1/4	1/4
⑤	1/2	5/8	5/8	1/2	1/2	1/2
⑥	3/8	1/2	1/2	1/2	1/2	1/2
⑦	1/2	5/8	5/8	5/16	5/16	5/16

LICENSED PROFESSIONAL ENGINEER — LESLIE E. ROBERTSON — No. 34360 — UNIVERSITY OF THE STATE OF NEW YORK

6-ABI-177.1

SKILLING - HELLE - CHRISTIANSEN - ROBERTSON Structural & Civil Engineers

PROJECT THE WORLD TRADE CENTER | TITLE SCHEDULE FOR DETAIL 370 G, H, I, J, K, L | DATE 7-28-67

REVISIONS
8-5-67
9-15-67
10-2-67
11-10-67
2-9-68

	370G	370H	370I	370J	370K	370L
PLATES						
R	1"	1"	1/2"	3/8"	—	1
S	3/4"	3/4"	1/2"	—	—	3/4
T	1"	1"	1/2"	—	—	1
U	1"	3/4"	1/2"	5/8"	1/2"	1
V	3/4"	3/4"	1/2"	5/8"	1/2"	3/4
ANGLES						
P	—	—	—	—	—	—
Q	6x4x5/16x0'-6"	6x4x5/16x0'-6"	6x3 1/2x5/16	—	6x3 1/2x5/16x0'-6"	6x4x5/16x0'-6"
DIMENSIONS						
A	1'-2"	1'-2"	0'-10"	1'-0"	1'-0"	1'-2"
B	0'-9"	0'-9"	0'-9"	—	0'-9"	0'-9"
C	1'-8"	1'-11"	0'-9"	—	—	1'-11"
D	1'-6"	1'-9"	0'-9"	—	—	
BOLTS						
K	4-1"ϕ	4-1"ϕ	4-3/4"ϕ	—	—	4-1"ϕ
L	2-3/4"ϕ	2-3/4"ϕ	2-3/4"ϕ	3-7/8"ϕ	2-3/4"ϕ	2-3/4"ϕ
M	4-3/4"ϕ	4-3/4"ϕ	4-3/4"ϕ	4-3/4"ϕ	4-3/4"ϕ	4-3/4"ϕ
N	10-1"ϕ	12-1"ϕ	6-3/4"ϕ	—	—	10-1"ϕ
O	6-1"ϕ	8-1"ϕ	—	—	—	6-1"ϕ
WELDS						
①	—	—	—	—	—	—
②	—	—	—	—	—	—
③	C.P.	C.P.	C.P.	C.P.	C.P.	C.P.
④	1/4	1/4	1/4	—	5/16	1/4
⑤	—	—	—	—	—	—
⑥	1/2	1/2	—	—	—	—
⑦	3/8	3/8	5/16	5/16	5/16	3/8
⑧	—	—	C.P.	C.P.	C.P.	C.P.

LICENSED PROFESSIONAL ENGINEER LESLIE E. ROBERTSON No. 34360 UNIVERSITY OF THE STATE OF NEW YORK

G-AB1-177.2

SKILLING - HELLE - CHRISTIANSEN - ROBERTSON Structural & Civil Engineers

PROJECT WORLD TRADE CENTER | TITLE CONNECTION DETAIL 370J | DATE 9-15-67

REVISIONS

10-5-67

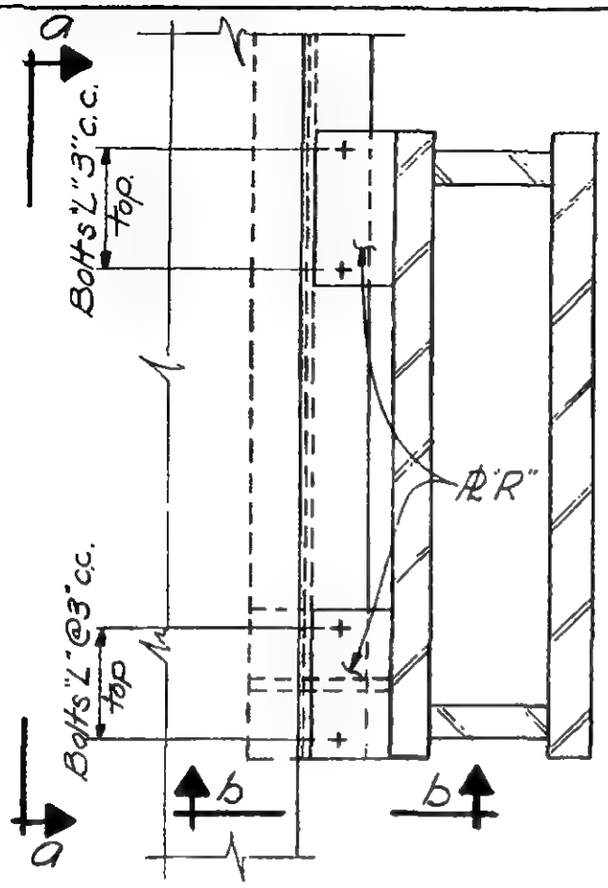

Note: ¼" ℄ included in detail only if specified on framing plan.

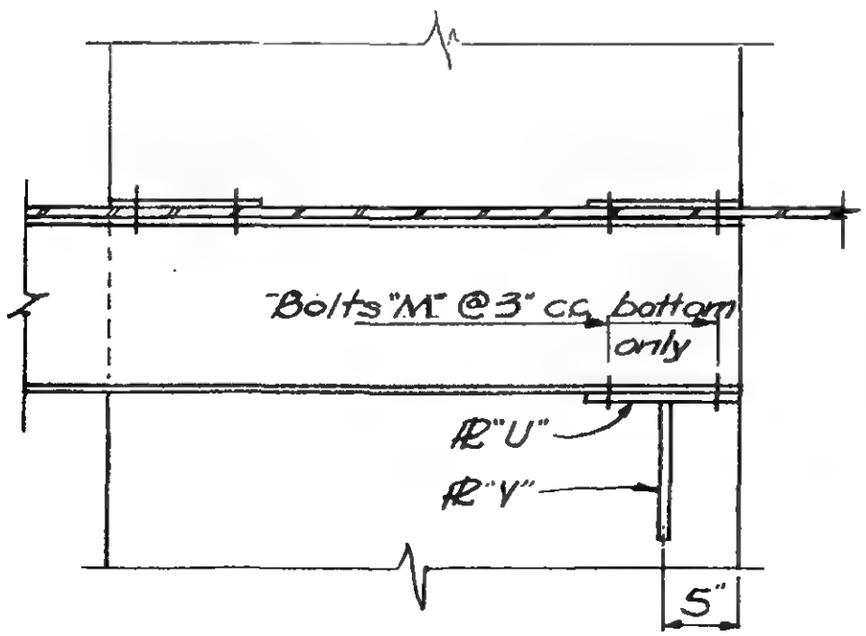

Section a-a

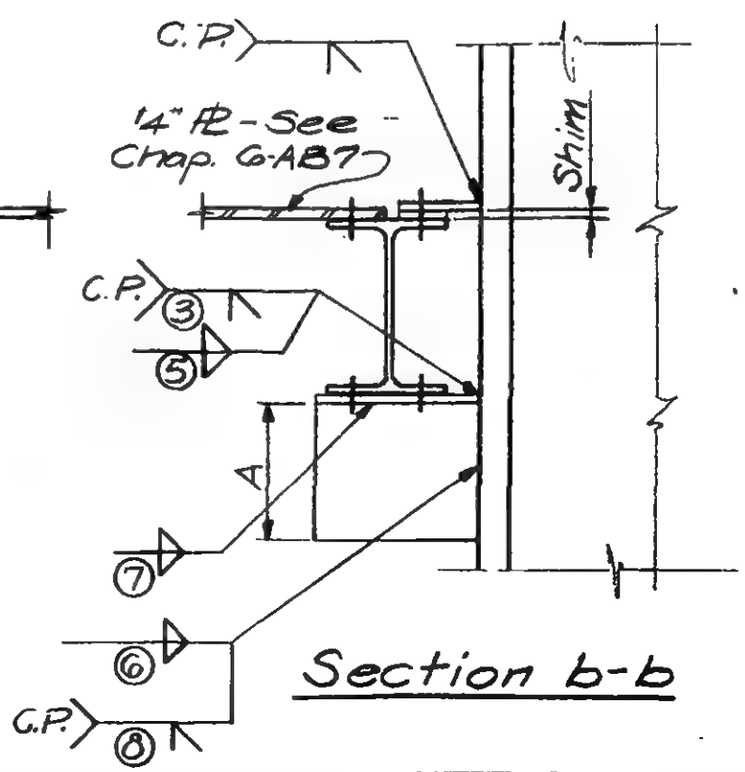

Section b-b

LICENSED PROFESSIONAL ENGINEER
LESLIE E. ROBERTSON
No. 34360
UNIVERSITY OF THE STATE OF NEW YORK

G-AB1-1773

SKILLING - HELLE - CHRISTIANSEN - ROBERTSON Structural & Civil Engineers

PROJECT THE WORLD TRADE CENTER | TITLE SCHEDULE FOR DETAIL 370 M | DATE 2-9-68

REVISIONS

	370 M					
PLATES						
R	—					
S	—					
T	—					
U	3/4					
V	3/4					
ANGLES						
P	—					
Q	8 × 4 × 7/16 × 0'-6"					
DIMENSIONS						
A	1'-2"					
B	0'-9"					
C	—					
D	—					
BOLTS						
K	—					
L	2-3/4" ϕ					
M	4-3/4" ϕ					
N	—					
O	—					
WELDS						
1	—					
2	—					
3	C.P.					
4	3/8					
5	—					
6	—					
7	3/8					
8	C.P.					

LICENSED PROFESSIONAL ENGINEER LESLIE E. ROBERTSON No. 34360 UNIVERSITY OF THE STATE OF NEW YORK

6-AB1-177.4

WORTHINGTON, SKILLING, HELLE & JACKSON — Civil & Structural Engineers

PROJECT: THE WORLD TRADE CENTER | TITLE: CONNECTION DETAIL 371 A | DATE: 6-5-67

REVISIONS
9-15-67
11-10-67

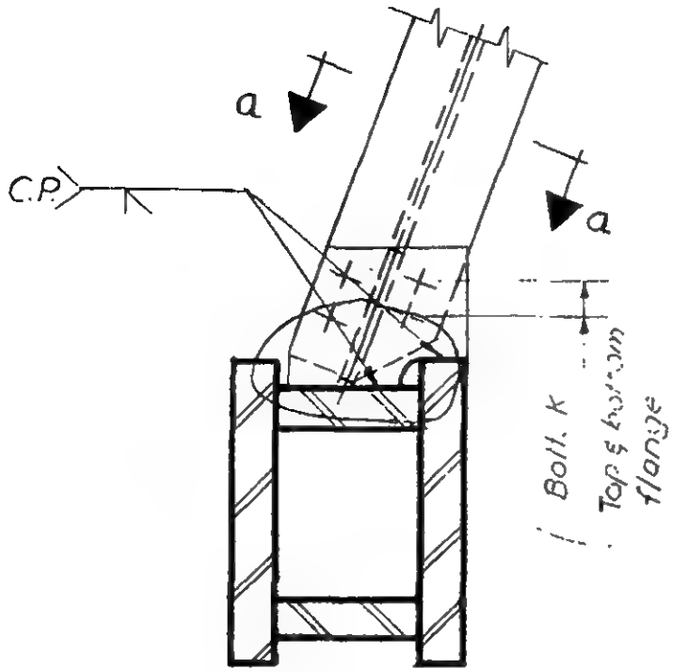

Plan

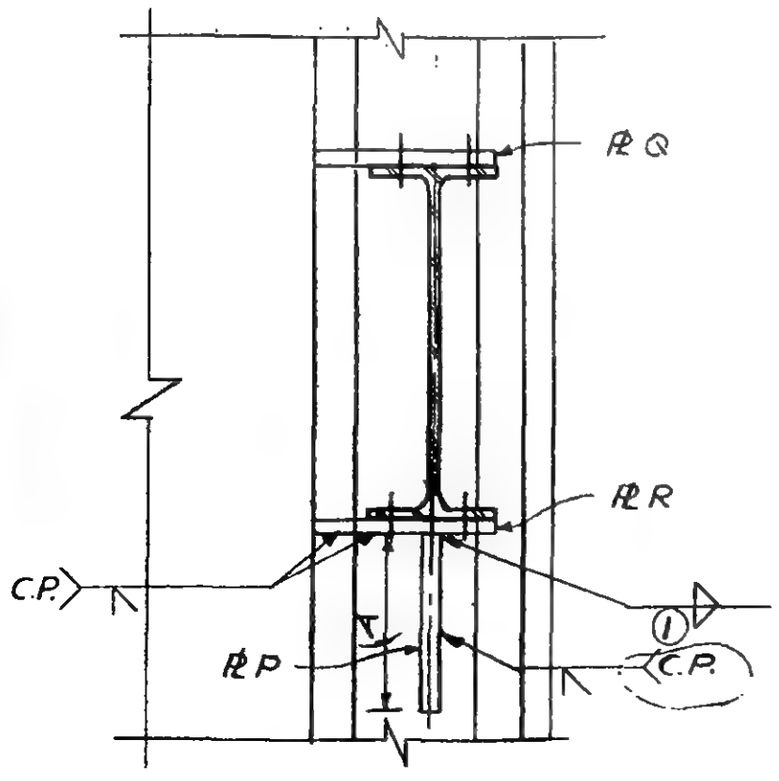

Section a-a

LICENSED PROFESSIONAL ENGINEER
LESLIE E. ROBERTSON
No. 34360
UNIVERSITY OF THE STATE OF NEW YORK

G-ABI-178

SKILLING - HELLE - CHRISTIANSEN - ROBERTSON Structural & Civil Engineers

PROJECT THE WORLD TRADE CENTER | TITLE SCHEDULE FOR DETAIL 371 A | DATE 9-15-67

REVISIONS

11-10-67

	371 A
PLATES	
P	5 x 5/8"
Q	1/2"
R	5/8"
DIMENSIONS	
A	1'-2"
BOLTS	
K	4 - 7/8" ϕ
WELDS	
①	1/2

LICENSED PROFESSIONAL ENGINEER
LESLIE E. ROBERTSON
No. 34360
UNIVERSITY OF THE STATE OF NEW YORK

G-AB1-178.1

WORTHINGTON, SKILLING, HELLE & JACKSON — Civil & Structural Engineers

PROJECT THE WORLD TRADE CENTER | TITLE CONNECTION DETAIL 372 A&B | DATE 6-5-67

REVISIONS

7-28-67
9-15-67
11-14-67

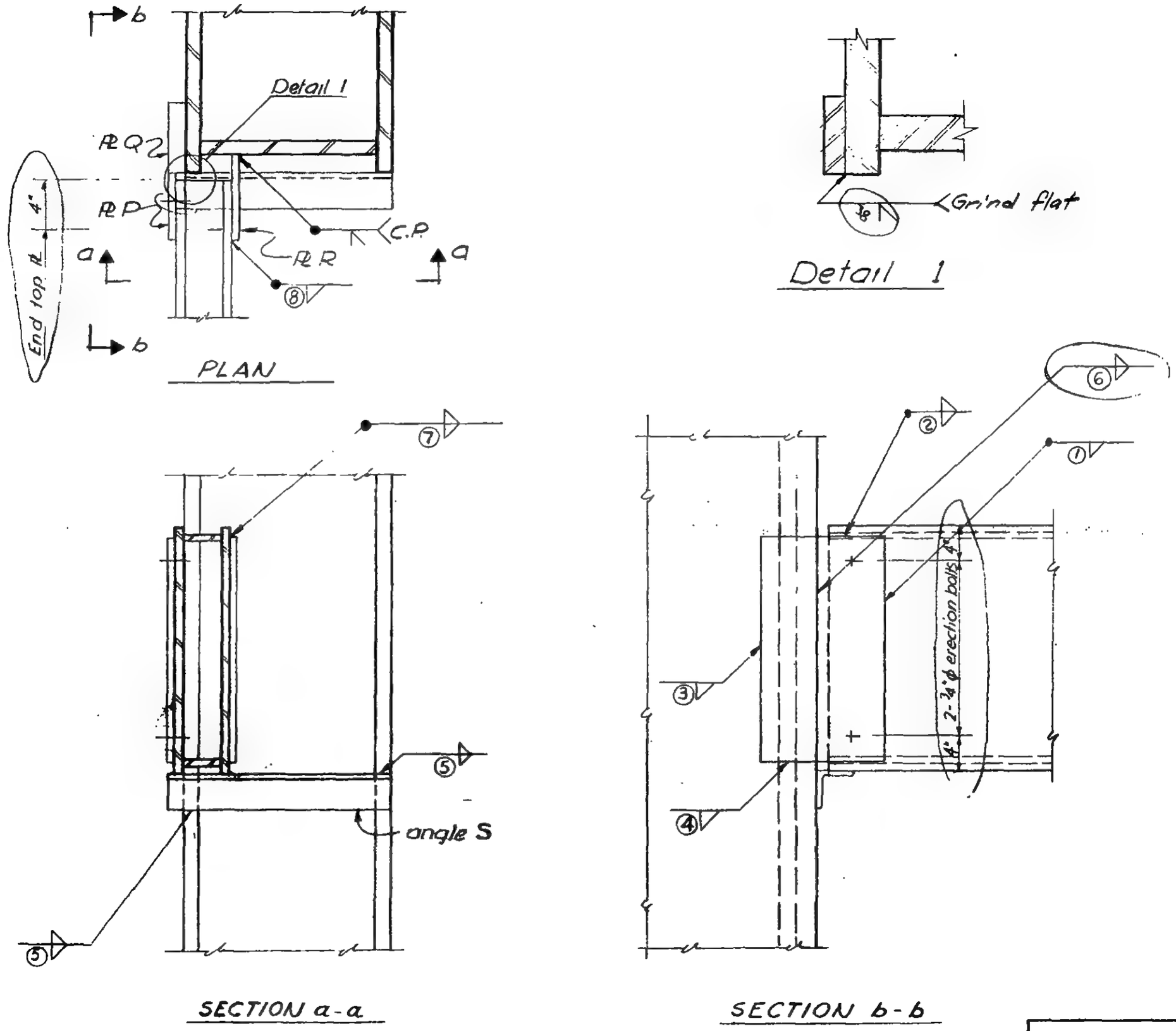

LICENSED PROFESSIONAL ENGINEER LESLIE E. ROBERTSON No. 34360 UNIVERSITY OF THE STATE OF NEW YORK

6-AB1-179

WORTHINGTON, SKILLING, HELLE & JACKSON — Civil & Structural Engineers

PROJECT THE WORLD TRADE CENTER | TITLE SCHEDULE FOR DETAIL 372 | DATE 7-28-67

REVISIONS

11-14-67

	A	B
PLATES		
P	6" x 1/2"	6" x 1/2"
Q	6" x 1 1/4"	6" x 1 1/4"
R	7 1/2" x 1/2"	7 1/2" x 1/2"
ANGLE		
S	4" x 4" x 5/16"	4" x 4" x 5/16"
WELD		
(1)	5/16	5/16
(2)	5/16	5/16
(3)	3/8	3/8
(4)	3/8	3/8
(5)	5/16	5/16
(6)	5/16	5/16
(7)	5/16	5/16
(8)	5/16	5/16

LICENSED PROFESSIONAL ENGINEER
LESLIE E. ROBERTSON
No. 34360
UNIVERSITY OF THE STATE OF NEW YORK

G-AB1-179.1

WORTHINGTON, SKILLING, HELLE & JACKSON — Civil & Structural Engineers

PROJECT THE WORLD TRADE CENTER | TITLE CONNECTION DETAILS 373A | DATE 6-5-67

REVISIONS
9-15-67
11-10-67

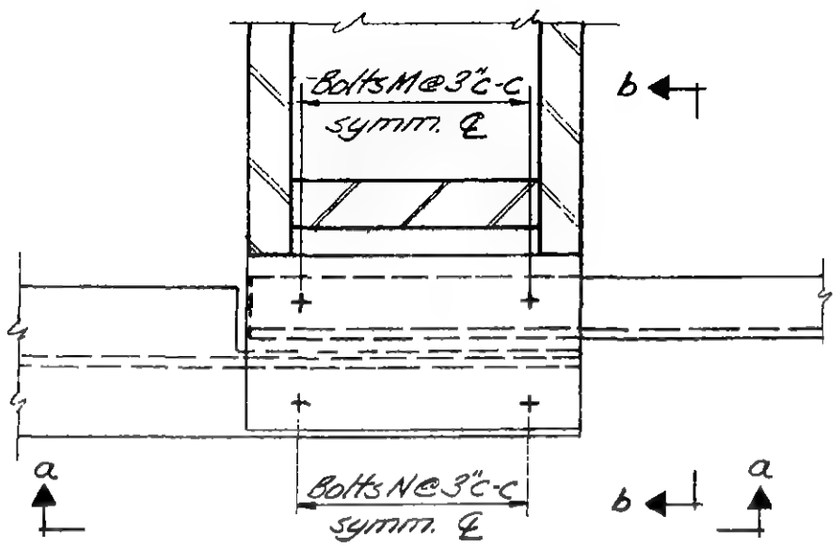

PLAN

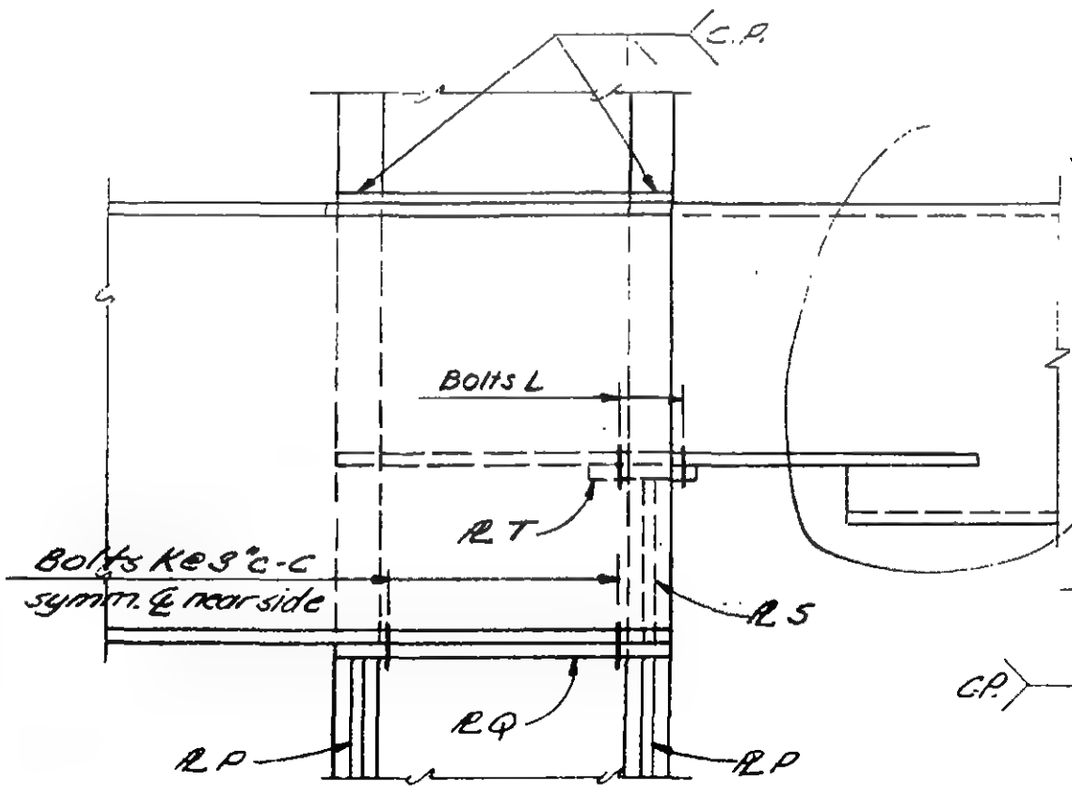

SECTION a-a

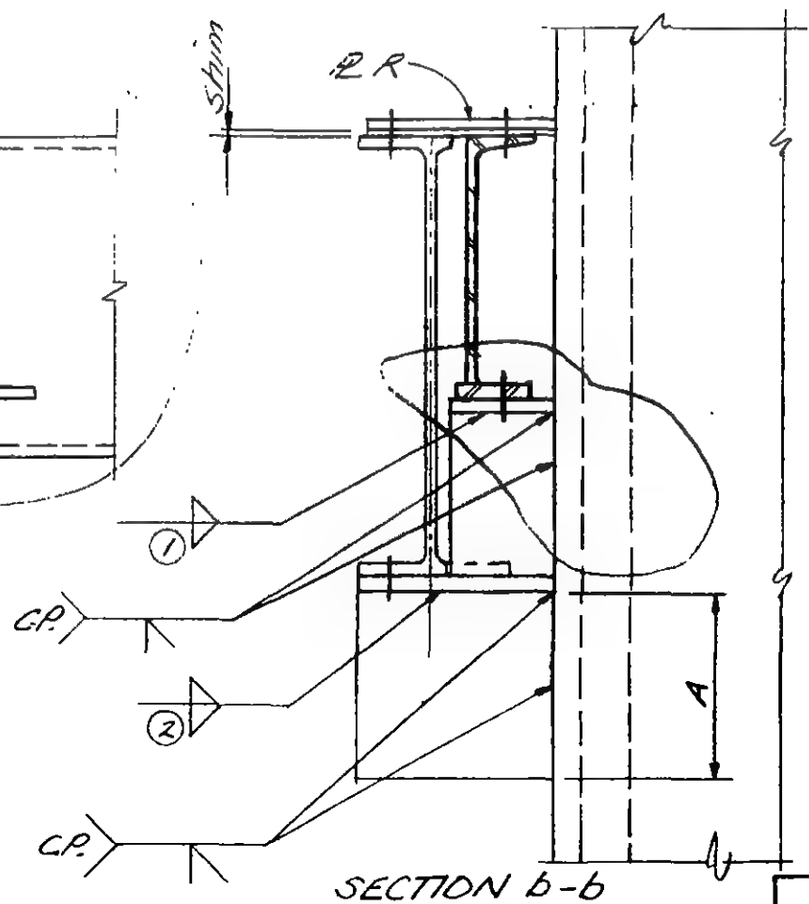

SECTION b-b

LICENSED PROFESSIONAL ENGINEER
CHARLIE E. ROBERTSON
No. 43360
UNIVERSITY OF THE STATE OF NEW YORK

6-AB1-180

SKILLING - HELLE - CHRISTIANSEN - ROBERTSON Structural & Civil Engineers

PROJECT THE WORLD TRADE CENTER | TITLE SCHEDULE FOR DETAIL 373A | DATE 9-15-67

REVISIONS

11-10-67

	373A					
PLATE						
P	78"					
Q	78"					
R	1/2"					
S	1"					
T	1"					
DIMENSION						
A	1'-4"					
BOLTS						
K	5 - 3/4" ϕ					
L	2 - 3/4" ϕ					
M	5 - 3/4" ϕ					
N	5 - 3/4" ϕ					
WELD						
①	5/16					
②	5/16					

6-AB1-180.1

WORTHINGTON, SKILLING, HELLE & JACKSON — Civil & Structural Engineers

PROJECT THE WORLD TRADE CENTER | TITLE CONNECTION DETAILS 374 A, B | DATE 6-5-67

REVISIONS
9-15-67
10-5-67

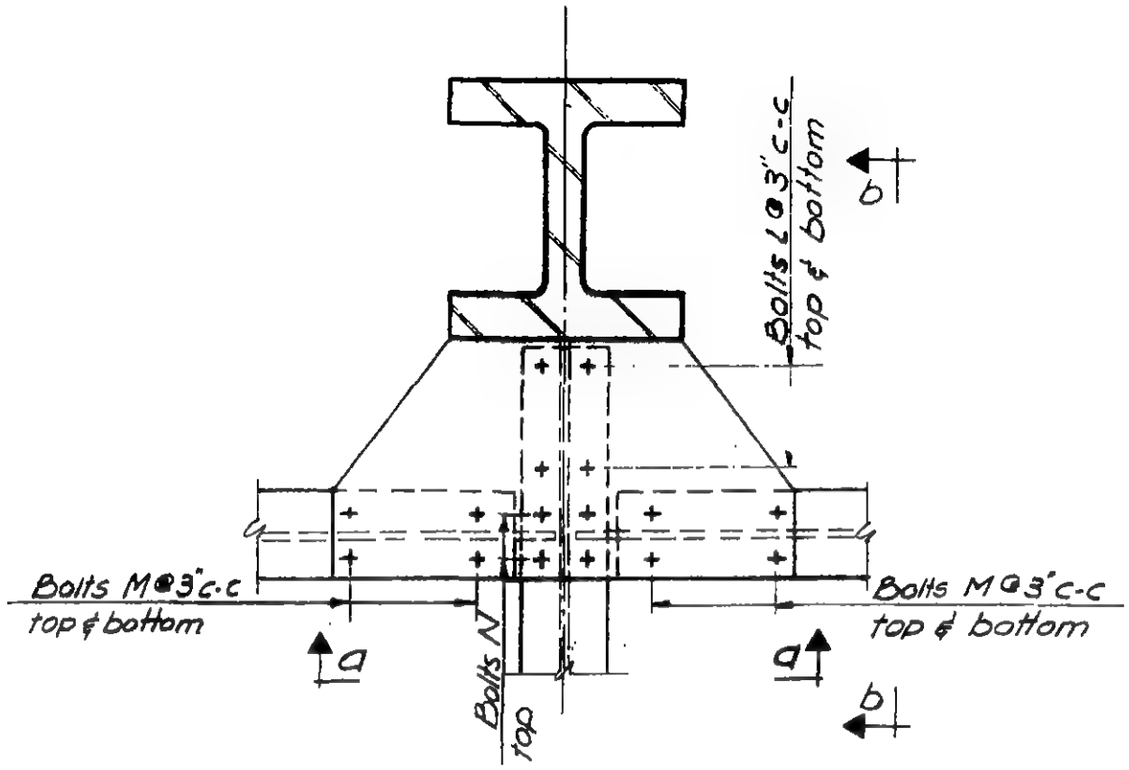

Plan

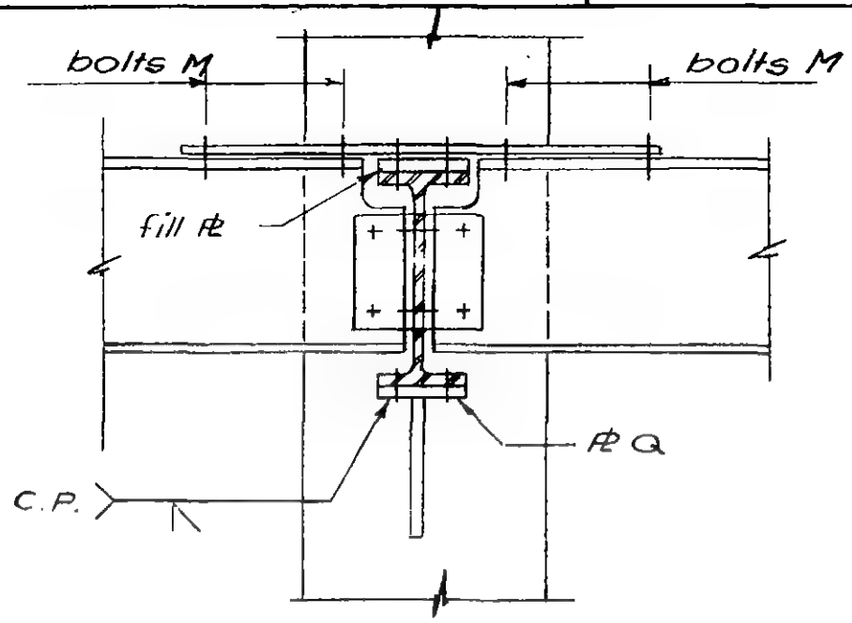

Section a-a
(374 B only)

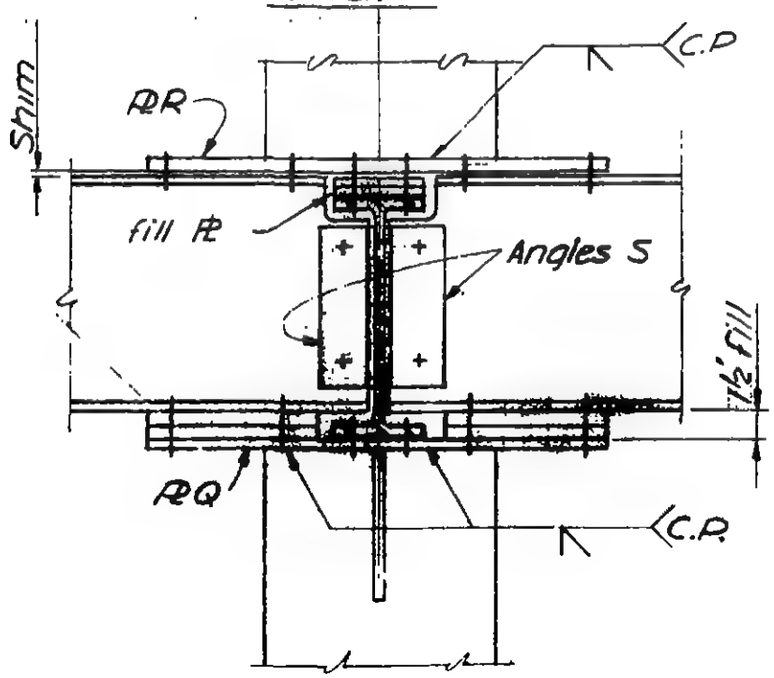

Section a-a (374 A only)

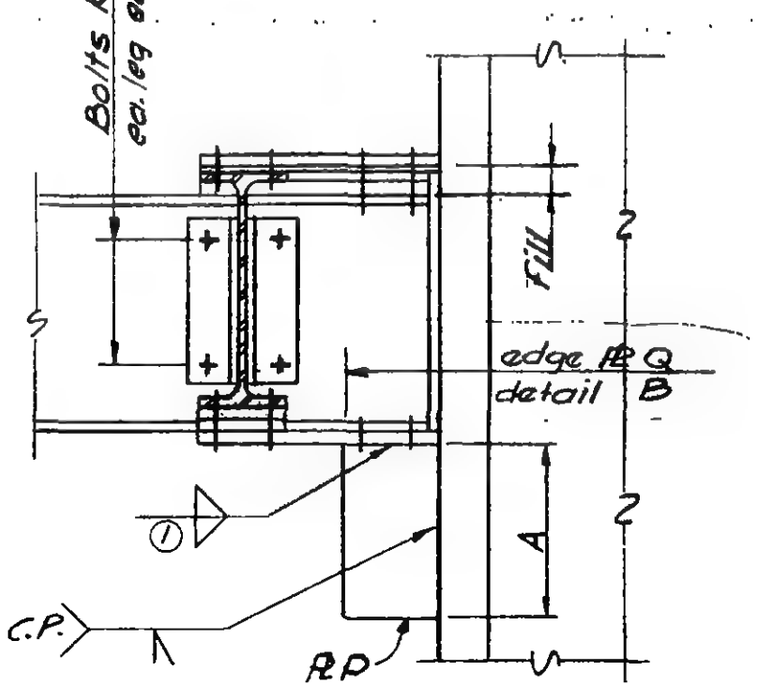

Section b-b

LICENSED PROFESSIONAL ENGINEER
LESLIE E. ROBERTSON
No. 34360
UNIVERSITY OF THE STATE OF NEW YORK

6-ABI-181

SKILLING - HELLE - CHRISTIANSEN - ROBERTSON Structural & Civil Engineers

PROJECT THE WORLD TRADE CENTER | TITLE SCHEDULE FOR DETAIL 374 A B | DATE 9-15-67

REVISIONS

10-5-67

	374 A	374 B
PLATES		
P	6 × 5/8"	6 1/2" × 5/8"
Q	5/8"	6" × 5/8"
R	5/8"	5/8"
ANGLES		
S	4 × 3 1/2 × 5/16	4 × 3 1/2 × 5/16
DIMENSIONS		
A	1'-0"	1'-3"
BOLTS		
K	3 - 3/4" ϕ	3 - 3/4" ϕ
L	4 - 3/4" ϕ	4 - 3/4" ϕ
M	6 - 3/4" ϕ	6 - 1" ϕ
N	4 - 3/4" ϕ	—
WELDS		
①	5/16	5/16

LEONARD E. ROBERTSON LICENSED PROFESSIONAL ENGINEER No. 34360 UNIVERSITY OF THE STATE OF NEW YORK

G-AB1-181.1

WORTHINGTON, SKILLING, HELLE & JACKSON — Civil & Structural Engineers

PROJECT: THE WORLD TRADE CENTER | TITLE: CONNECTION DETAIL 375A | DATE: 6-19-67

REVISIONS

8-14-67
11-14-67
12-21-67

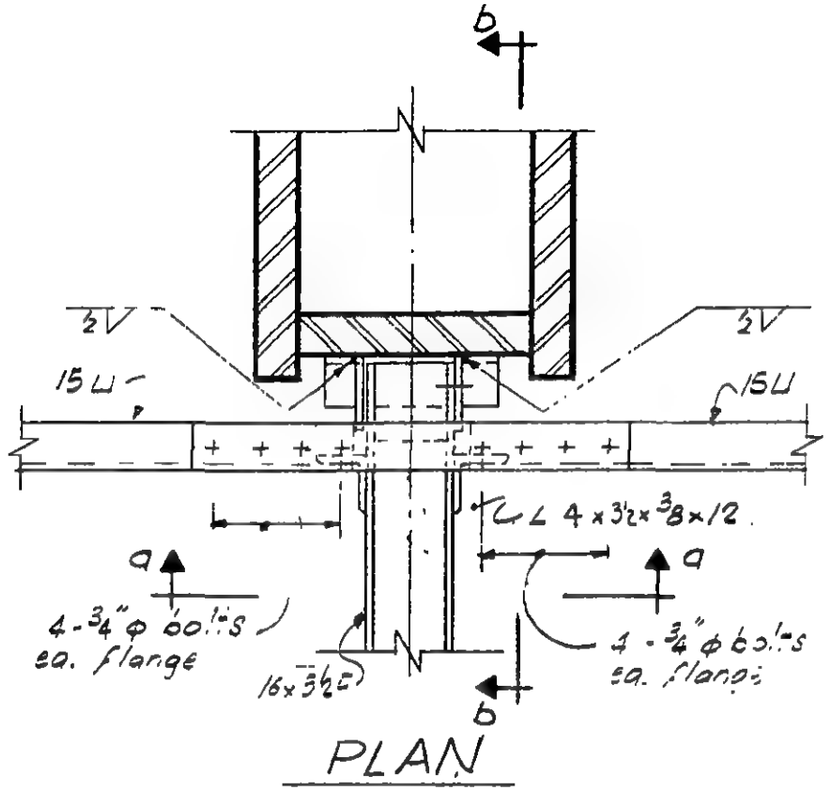

PLAN

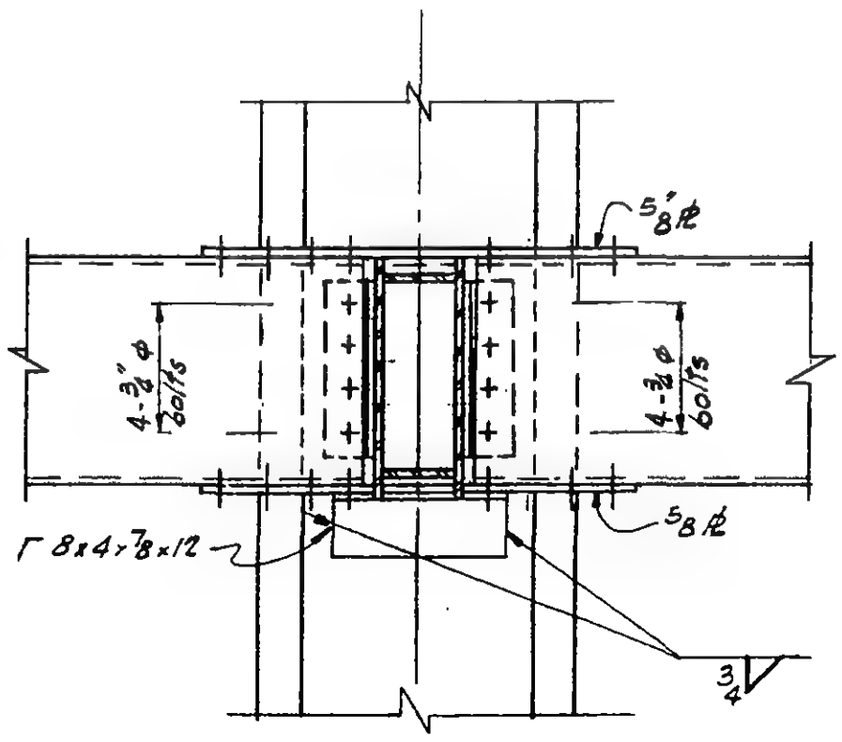

SECTION a-a

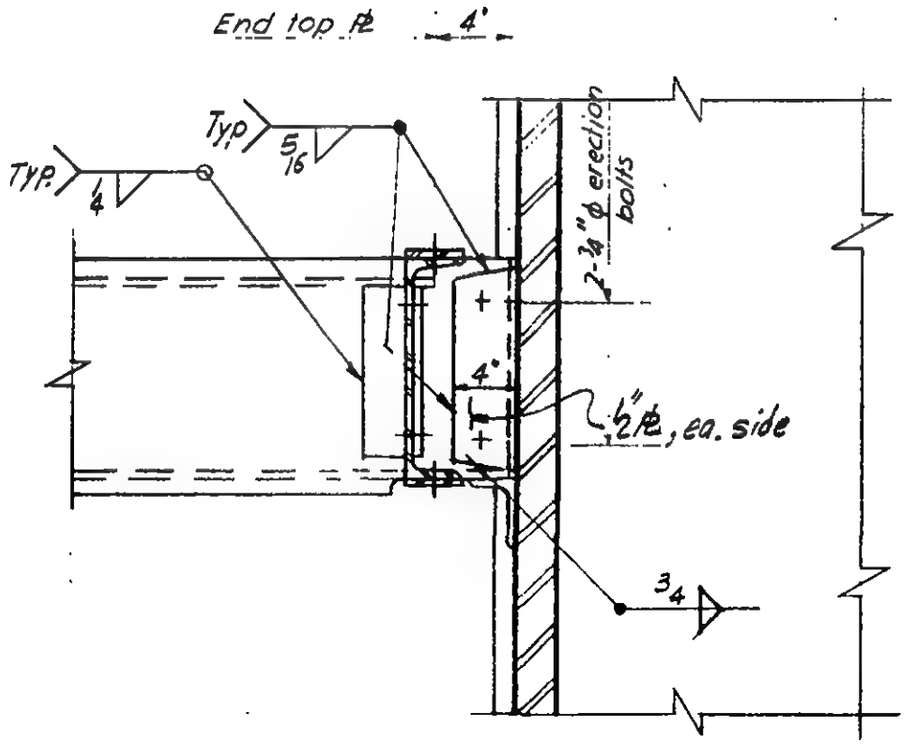

SECTION b-b

6-AB1-182

LICENSED PROFESSIONAL ENGINEER
LESLIE E. ROBERTSON
No. 34360
UNIVERSITY OF THE STATE OF NEW YORK

WORTHINGTON, SKILLING, HELLE & JACKSON — Civil & Structural Engineers

PROJECT THE WORLD TRADE CENTER | TITLE CONNECTION DETAIL 376A | DATE 6-19-67

REVISIONS

8-14-67

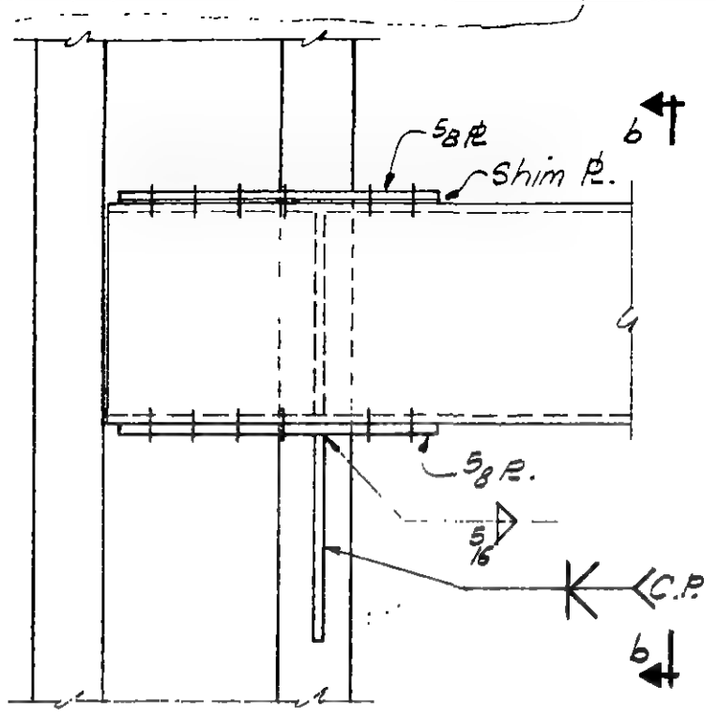

SECTION a-a

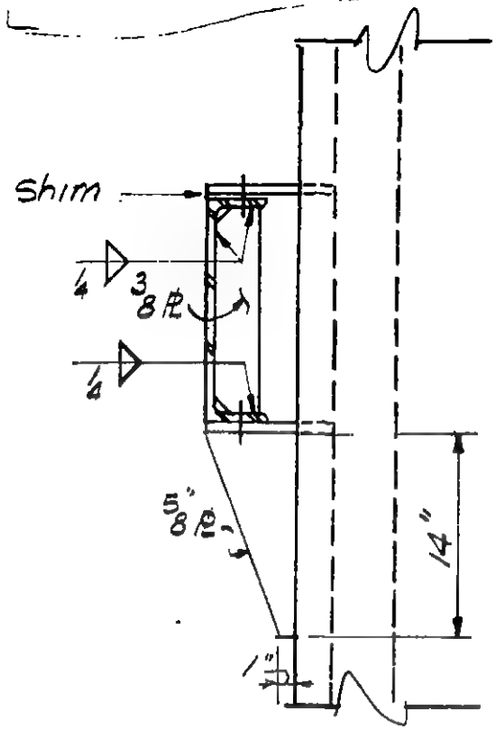

SECTION b-b

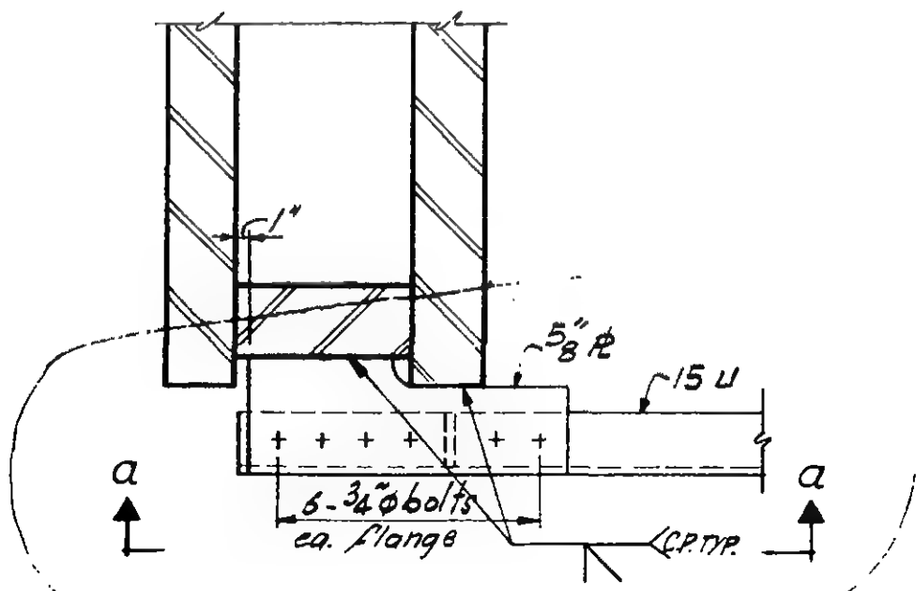

PLAN

LICENSED PROFESSIONAL ENGINEER
LESLIE E. ROBERTSON
No. 34360
UNIVERSITY OF THE STATE OF NEW YORK

6-AB1-183

WORTHINGTON, SKILLING, HELLE & JACKSON — Civil & Structural Engineers

PROJECT THE WORLD TRADE CENTER | TITLE CONNECTION DETAIL 377A | DATE 6-19-67

REVISIONS

8-14-67

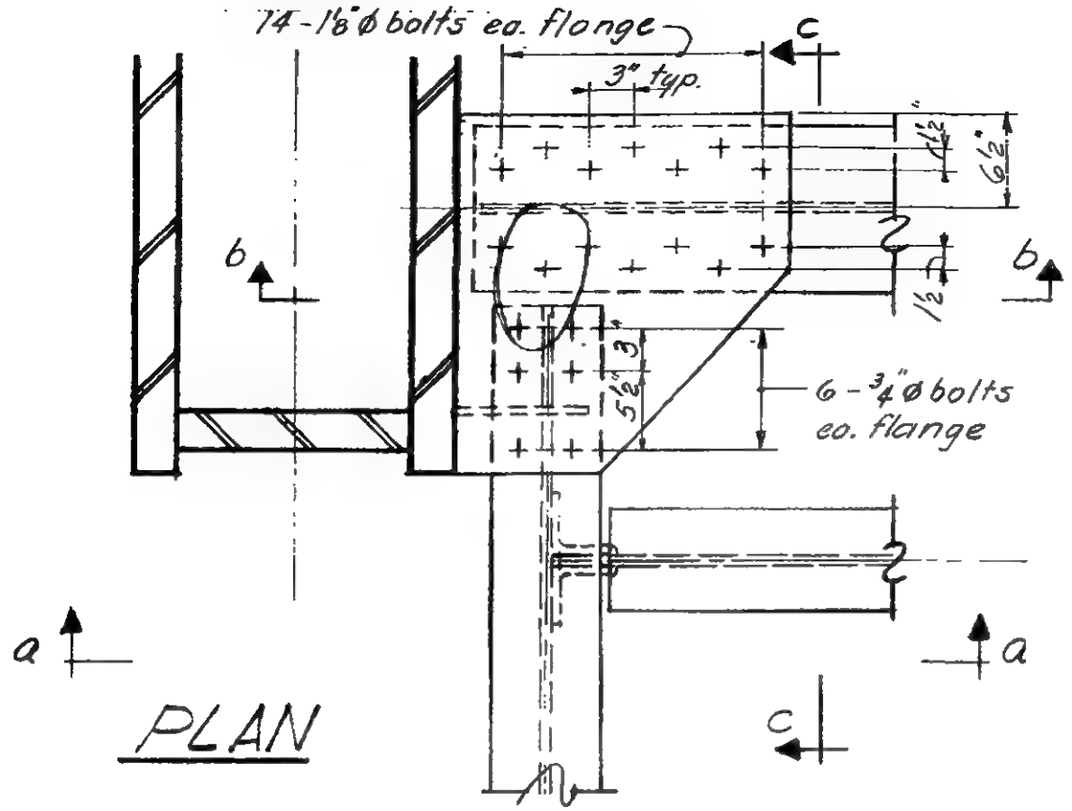

PLAN

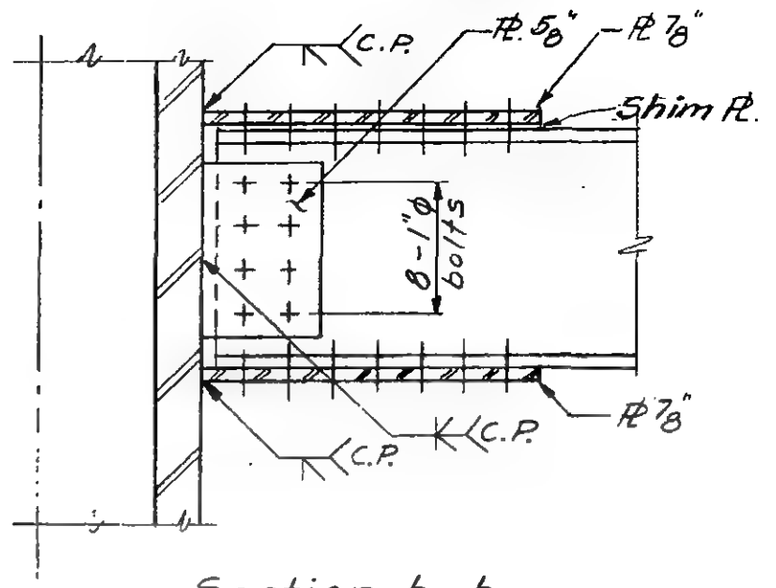

Section b-b

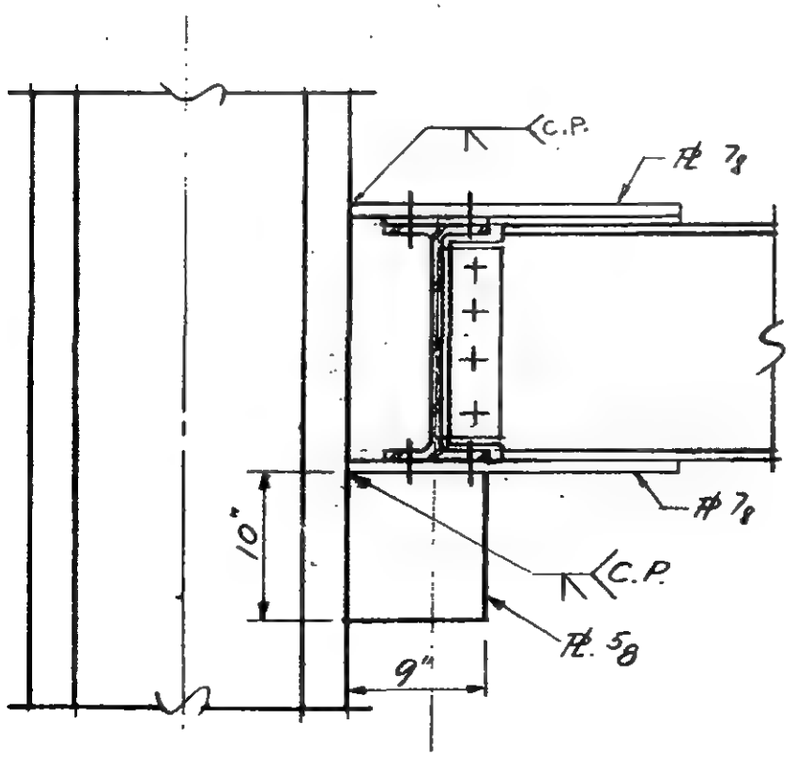

Section a-a

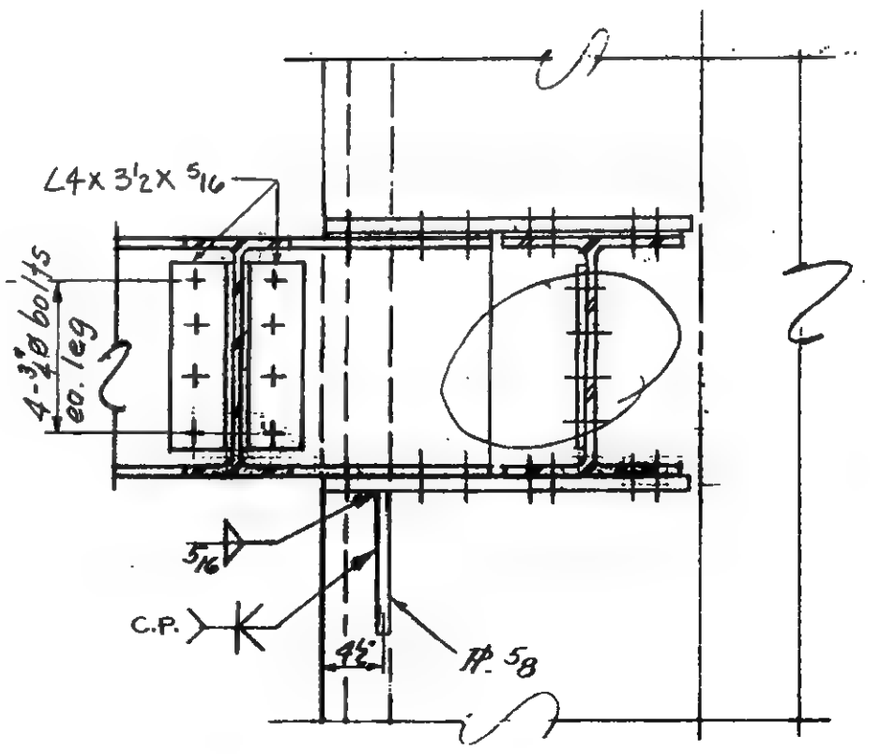

Section c-c

LICENSED PROFESSIONAL ENGINEER
LESLIE E. ROBERTSON
No. 34360
UNIVERSITY OF THE STATE OF NEW YORK

5-AB1-184

SKILLING - HELLE - CHRISTIANSEN - ROBERTSON Structural & Civil Engineers

PROJECT THE WORLD TRADE CENTER | TITLE CONNECTION DETAIL 377 B | DATE 8-14-67

REVISIONS

9-29-67

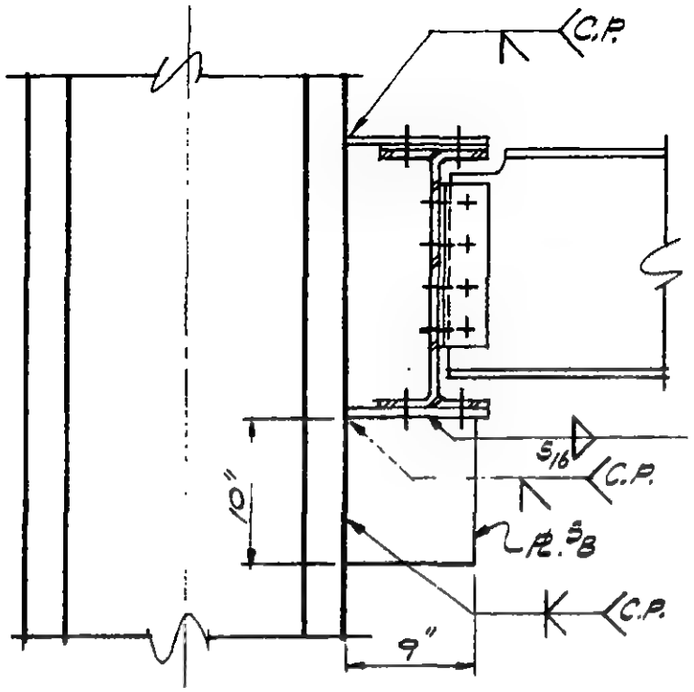

Section a-a

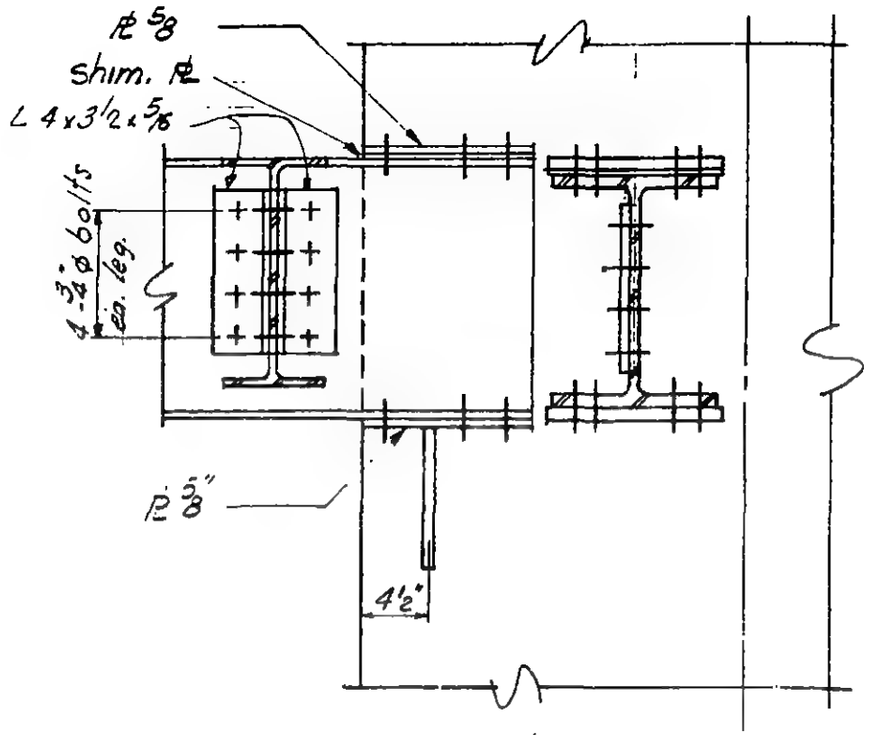

Section-b-b

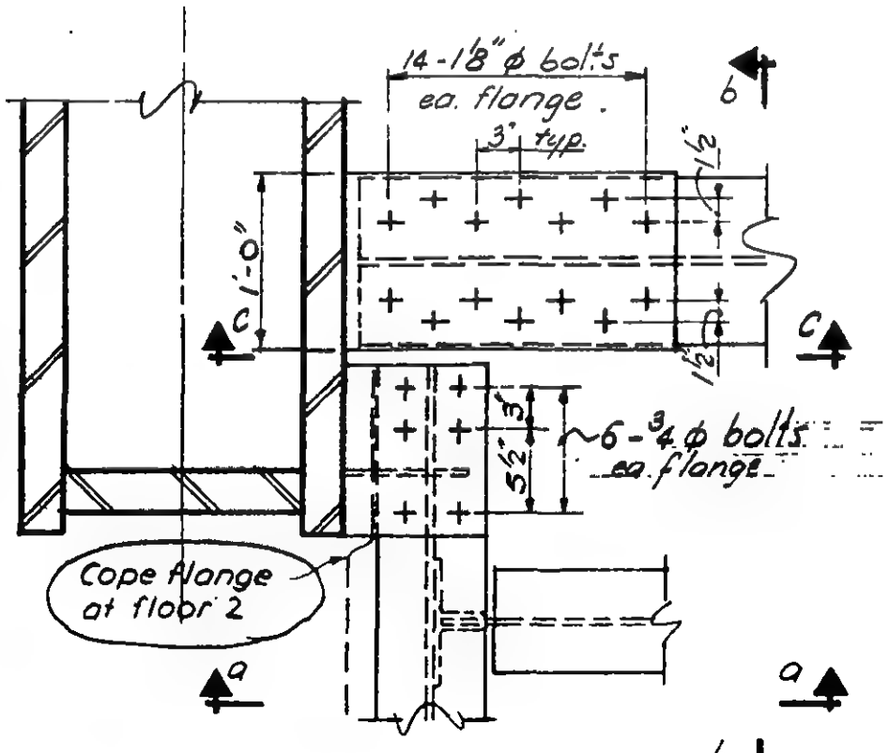

PLAN

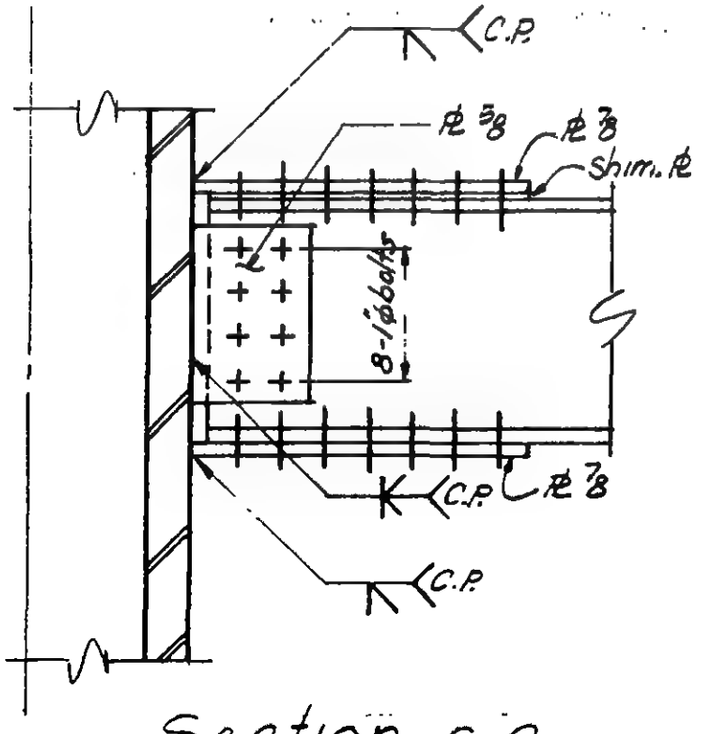

Section C-C

6-AB1-184.1

LICENSED PROFESSIONAL ENGINEER LESLIE E. ROBERTSON No. 34360 STATE OF NEW YORK

WORTHINGTON, SKILLING, HELLE & JACKSON — Civil & Structural Engineers

PROJECT THE WORLD TRADE CENTER | TITLE CONNECTION DETAIL 378A, B, C | DATE 6-19-67

REVISIONS

8-14-67

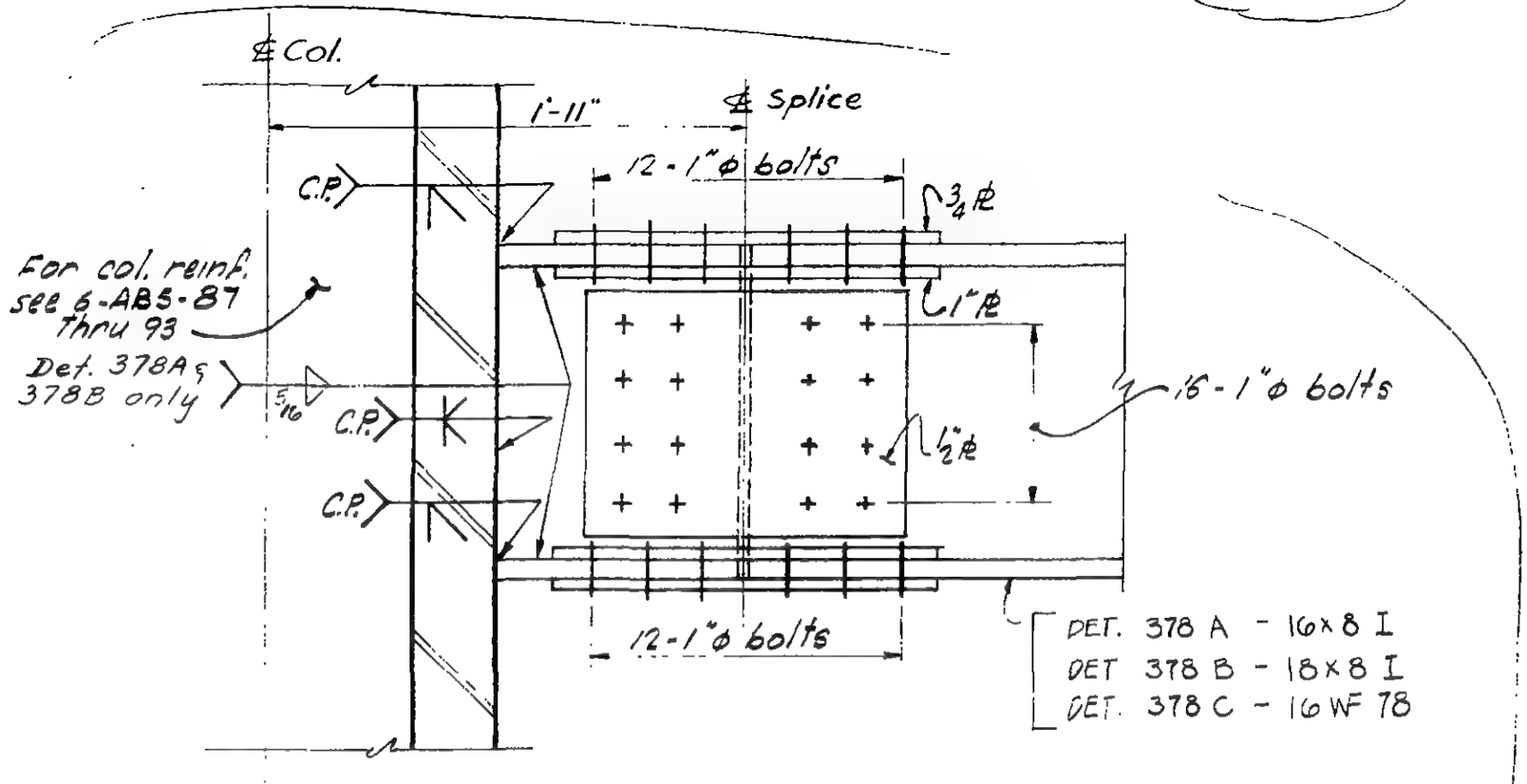

SECTION a-a

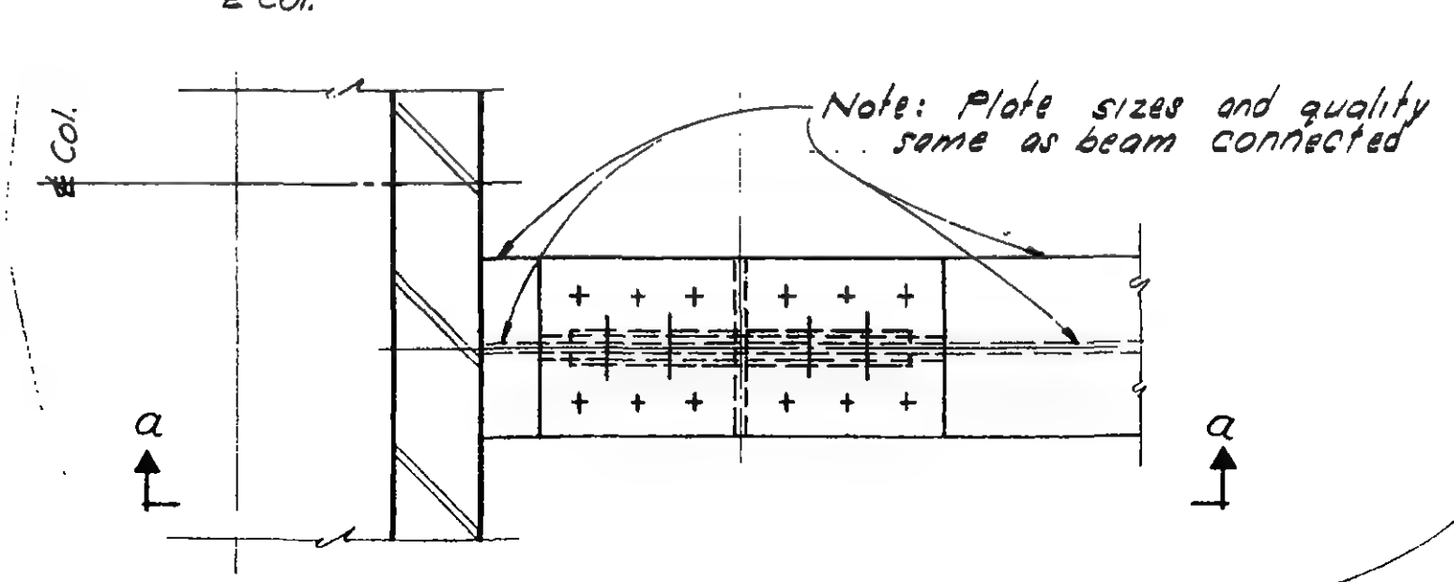

PLAN

LICENSED PROFESSIONAL ENGINEER
LESLIE E. ROBERTSON
No. 34360
UNIVERSITY OF THE STATE OF NEW YORK

6-AB1-185

WORTHINGTON, SKILLING, HELLE & JACKSON — Civil & Structural Engineers

PROJECT: THE WORLD TRADE CENTER | TITLE: CONNECTION DETAIL 379 A | DATE: 6-19-67

REVISIONS

8-14-67

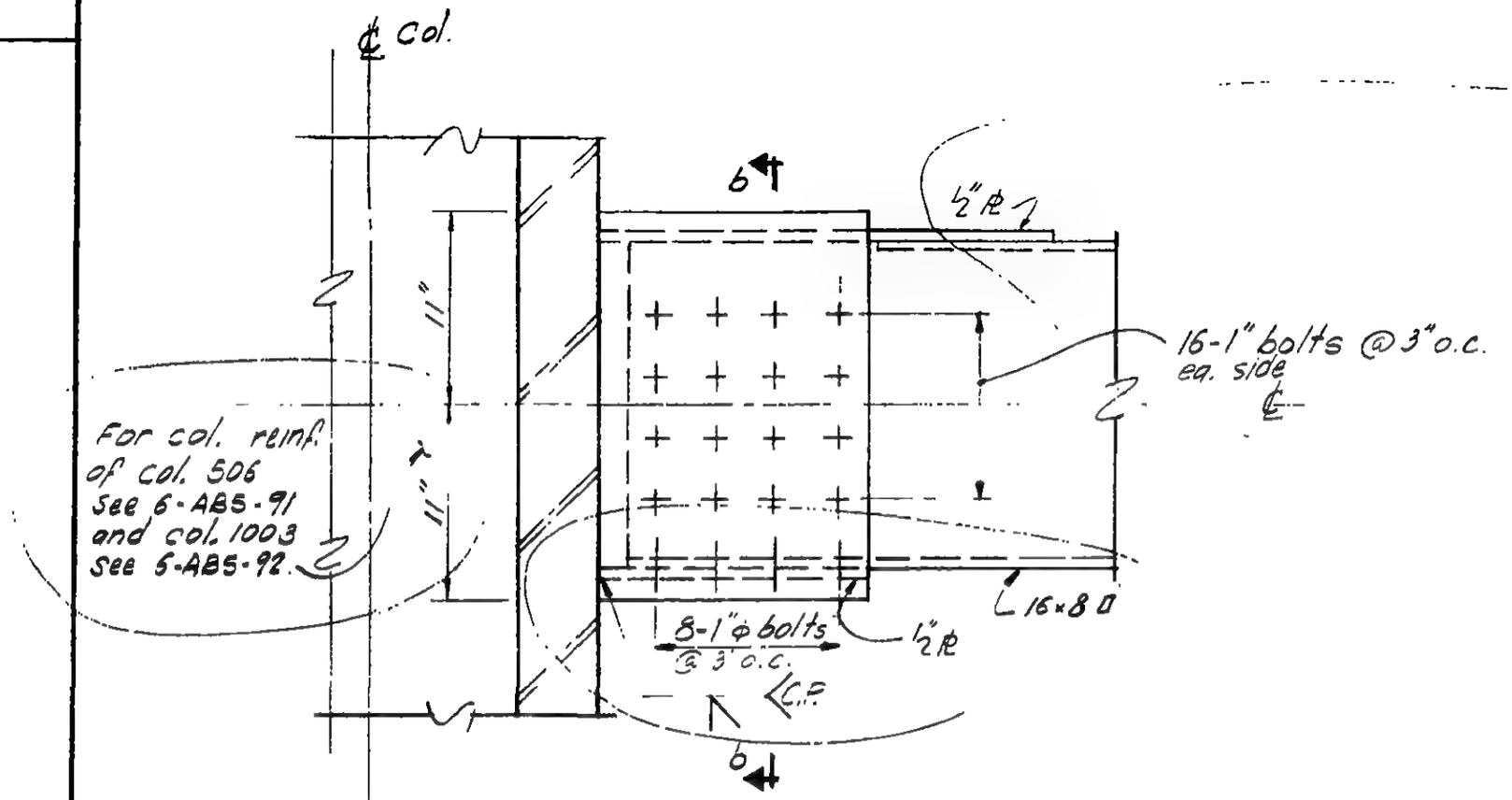

SECTION a-a

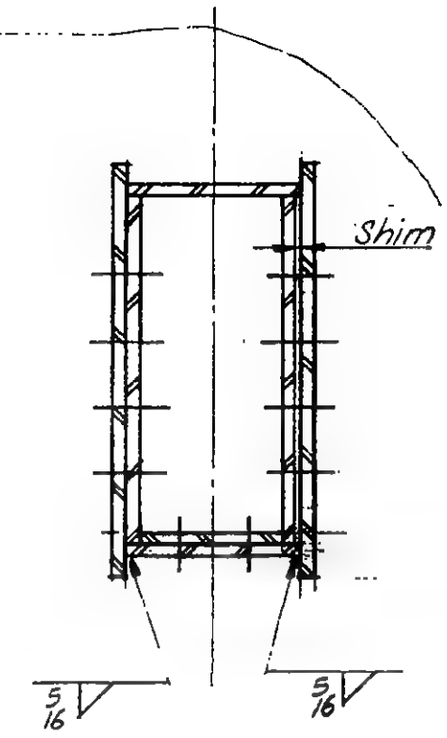

Section b-b

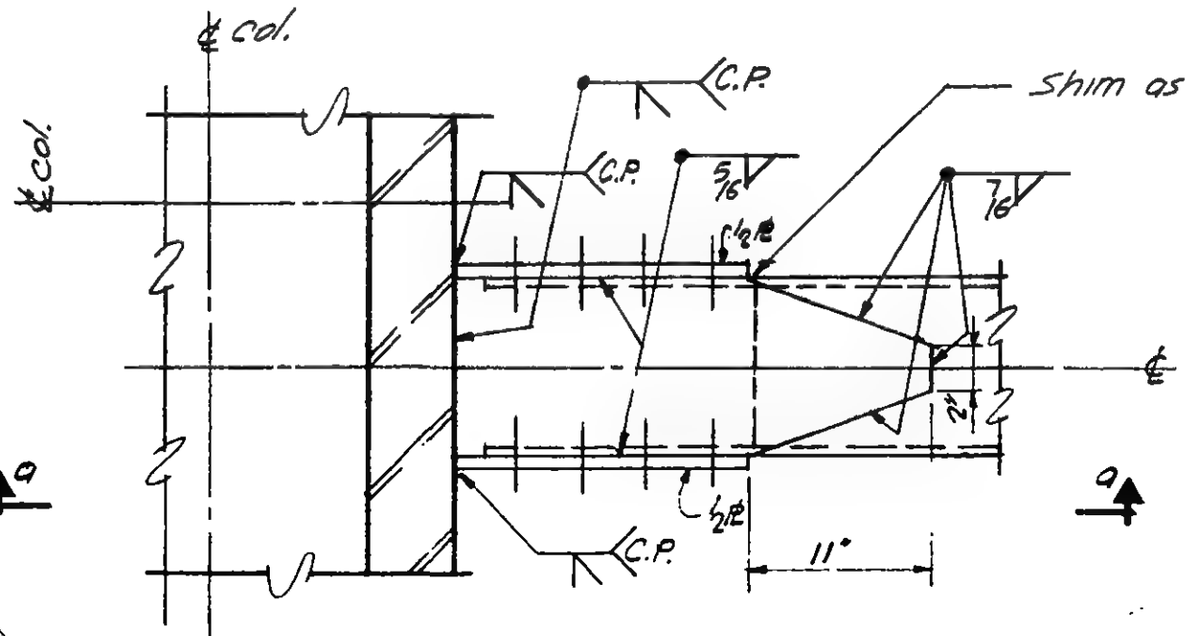

PLAN

LICENSED PROFESSIONAL ENGINEER
LESLIE E. ROBERTSON
No. 34360
UNIVERSITY OF THE STATE OF NEW YORK

G-AB1-186

WORTHINGTON, SKILLING, HELLE & JACKSON — Civil & Structural Engineers

PROJECT: THE WORLD TRADE CENTER | TITLE: CONNECTION DETAIL 380 A, B, C | DATE: 6-19-67

REVISIONS

8-14-67
9-29-67

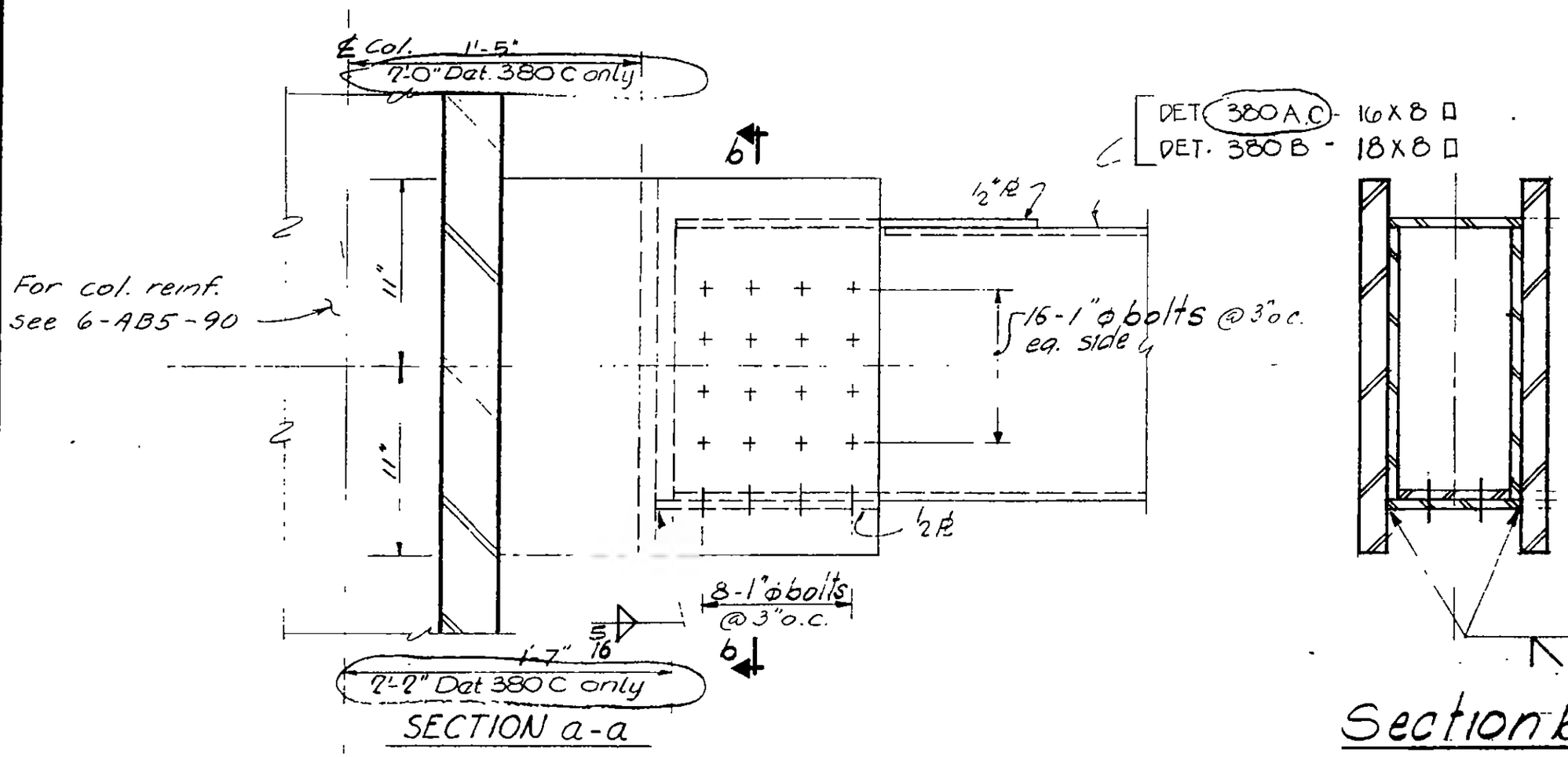

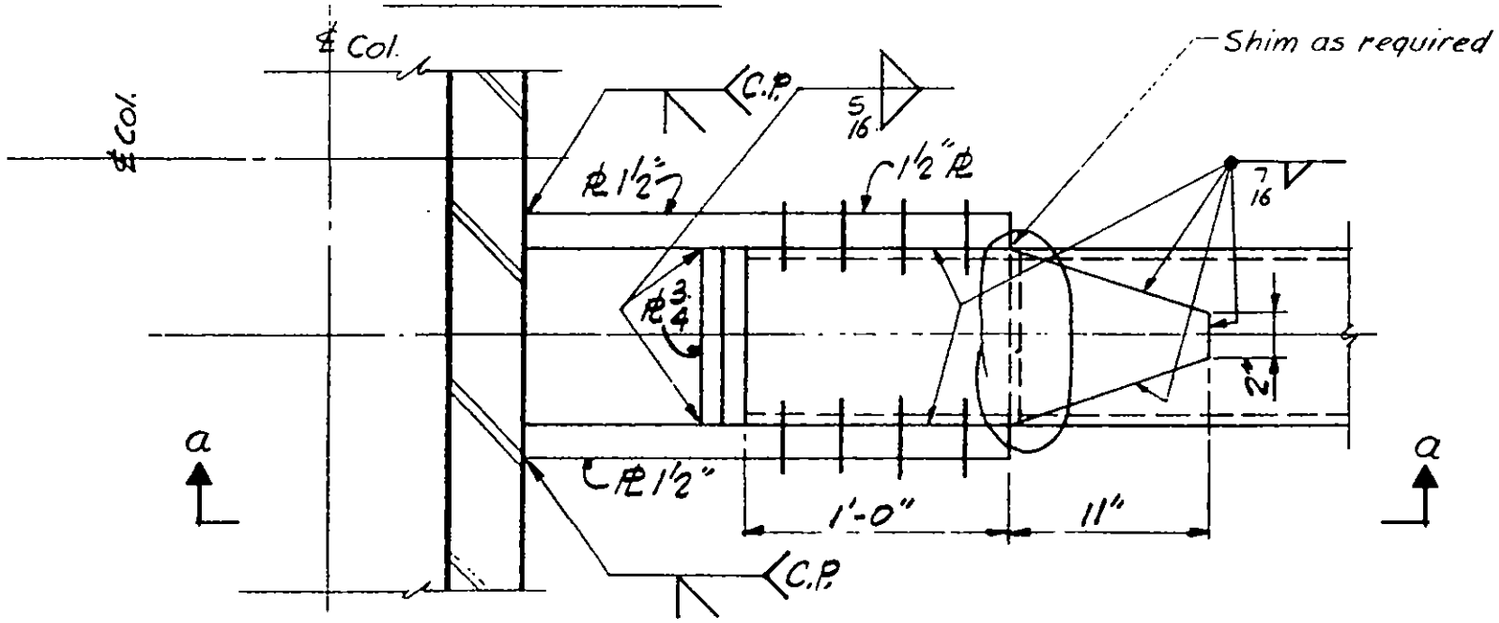

LICENSED PROFESSIONAL ENGINEER
LESLIE E. ROBERTSON
No. 34360
UNIVERSITY OF THE STATE OF NEW YORK

6-AB1-187

SKILLING - HELLE - CHRISTIANSEN - ROBERTSON Structural & Civil Engineers

PROJECT THE WORLD TRADE CENTER | TITLE CONNECTION DETAIL 381A, C | DATE 9-15-67

REVISIONS

11-23-67

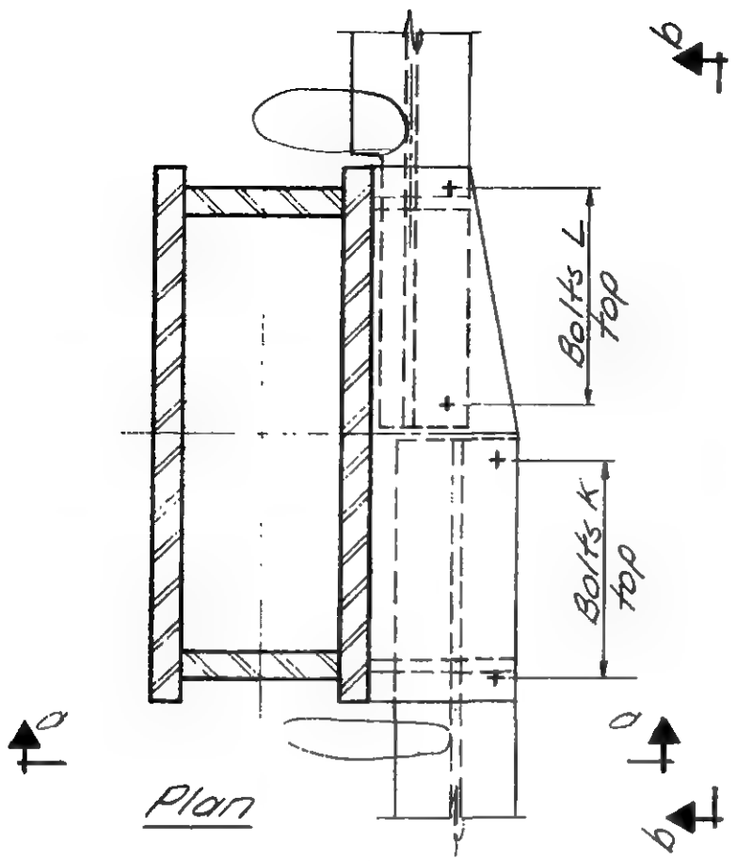

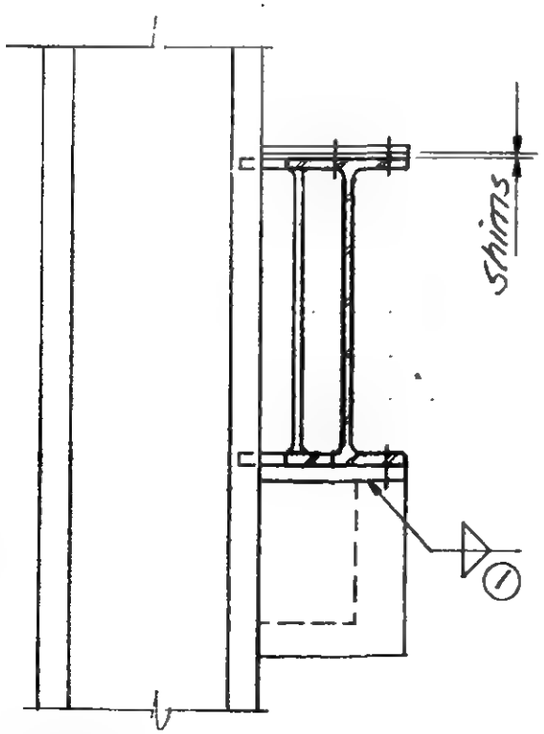

Section a-a

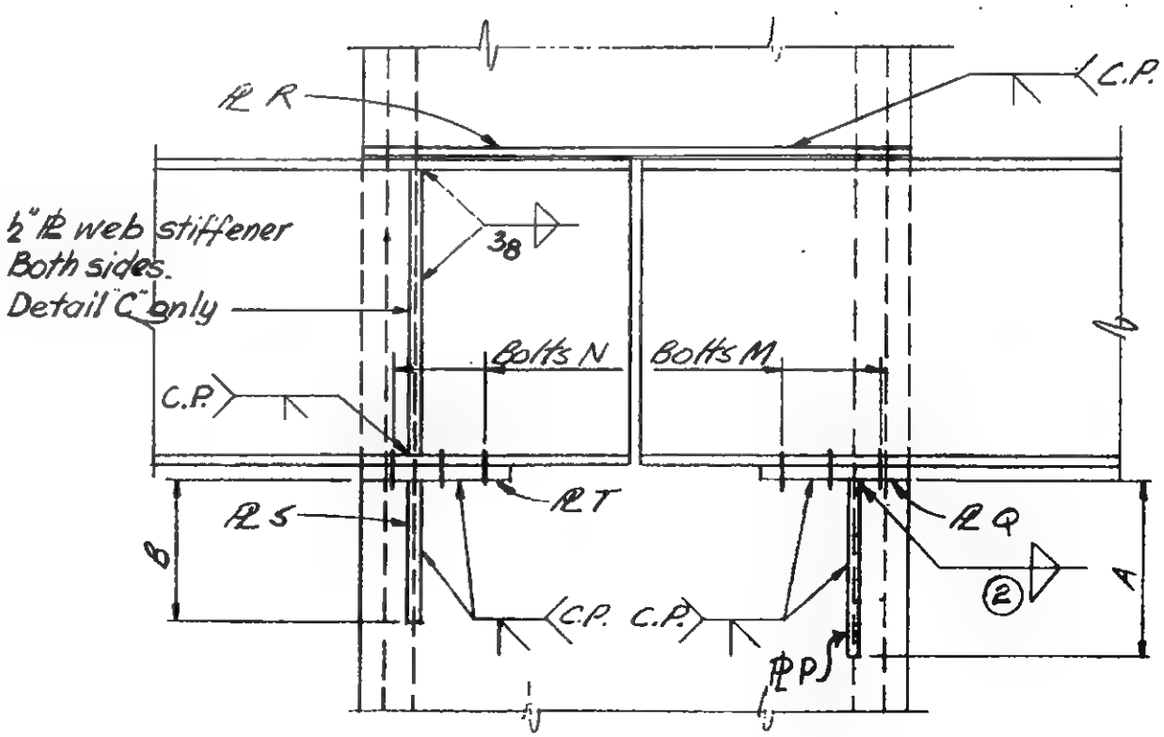

Section b-b

RICHARD [illegible] ROBERTSON
LICENSED PROFESSIONAL ENGINEER
STATE OF NEW YORK
UNIVERSITY OF THE STATE OF NEW YORK

6-AB1-188

SKILLING - HELLE - CHRISTIANSEN - ROBERTSON Structural & Civil Engineers

PROJECT: THE WORLD TRADE CENTER | TITLE: SCHEDULE FOR DETAIL 381 A | DATE: 9-15-67

REVISIONS

1-23-67

REF. DRWG.	6-AB1-188	6-AB1-188.2	6-AB1-188			
	381A	381 B	381C			
PLATE						
P	5/8"		1/2			
Q	5/8"		1/2			
R	1/2"		5/8			
S	5/8"		3/4			
T	5/8"		3/4			
DIMENSION						
A	1'-0"		0'-10"			
B	0'-10"		1'-5"			
BOLTS						
K	[illegible]-1"ϕ					
L	6-1"ϕ		4-7/8"ϕ			
M	3-3/4"ϕ		4-7/8"ϕ			
N	3-3/4"ϕ		2-3/4"ϕ			
			2-3/4"ϕ			
WELD						
①	5/16		5/16			
②	5/16		5/16			

G-AB1-188.1

SKILLING - HELLE - CHRISTIANSEN - ROBERTSON Structural & Civil Engineers

PROJECT THE WORLD TRADE CENTER | TITLE CONNECTION DETAIL 381 B | DATE 10-5-67

REVISIONS

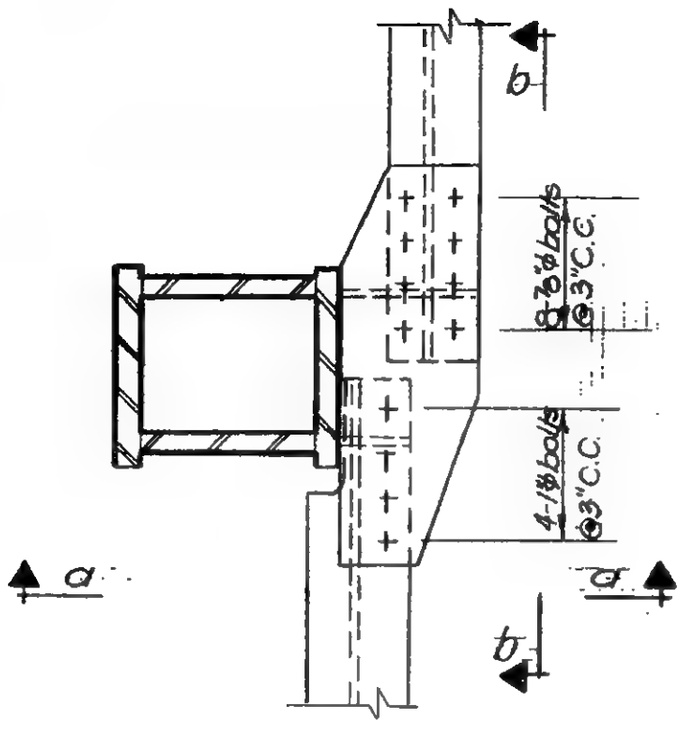

Plan

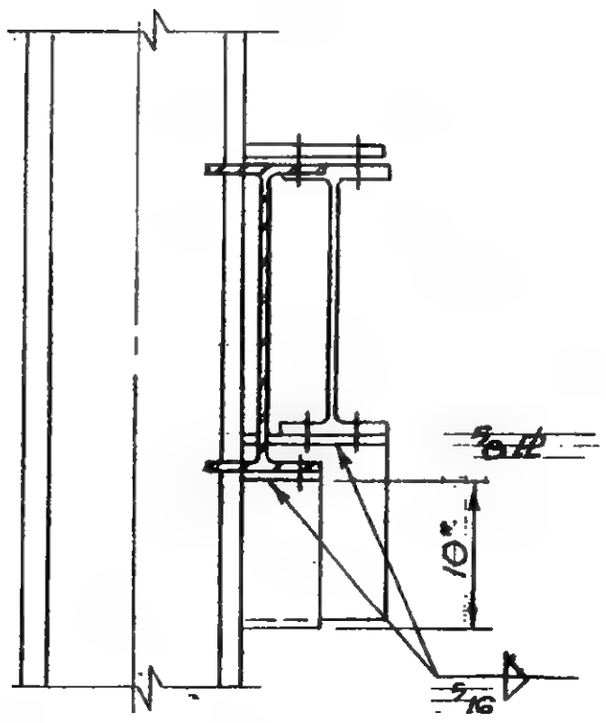

Section a-a

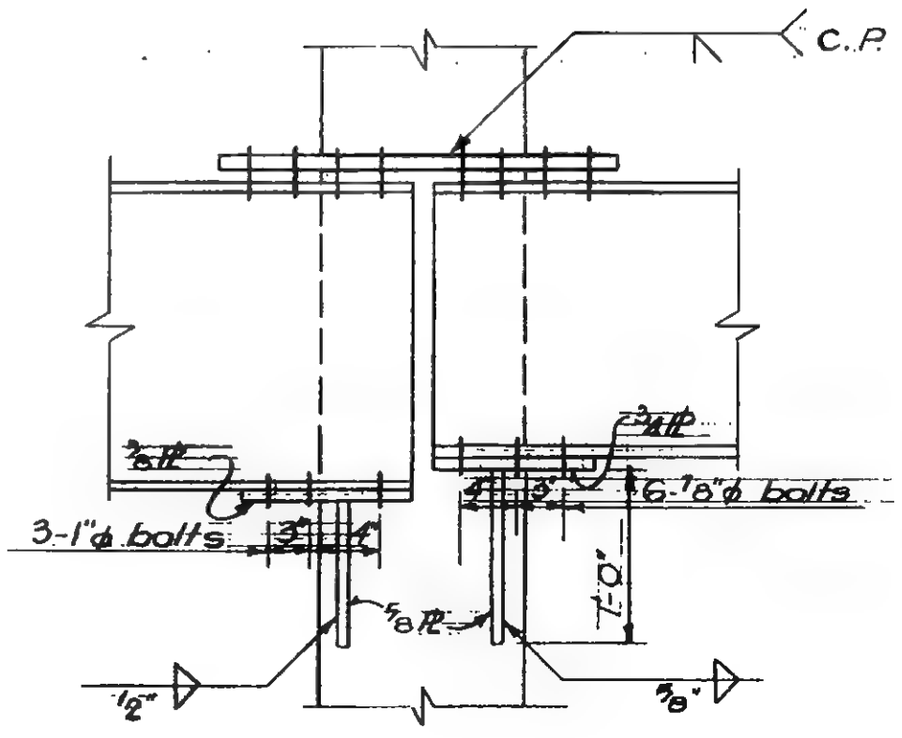

Section b-b

REGISTERED PROFESSIONAL ENGINEER
LESLIE E. ROBERTSON
No. 34360
STATE OF NEW YORK

6-AB1-188.2

WORTHINGTON SKILLING HELLE & JACKSON — Civil & Structural Engineers

PROJECT THE WORLD TRADE CENTER | CONNECTION DETAIL 382 A | DATE 6-19-67

REVISIONS
8-14-67

(6-AB1-189.1) (6-AB1-189.2)

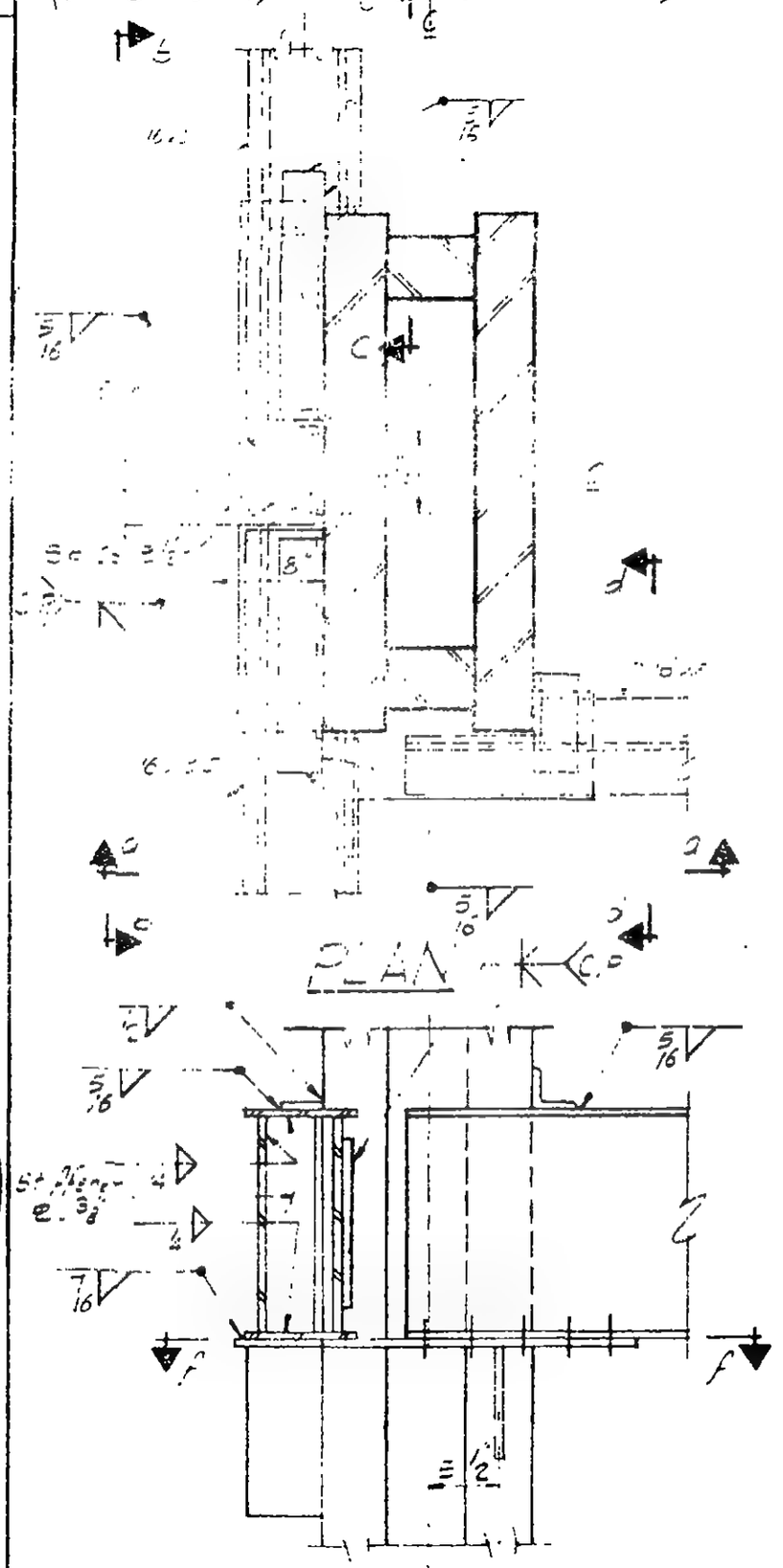

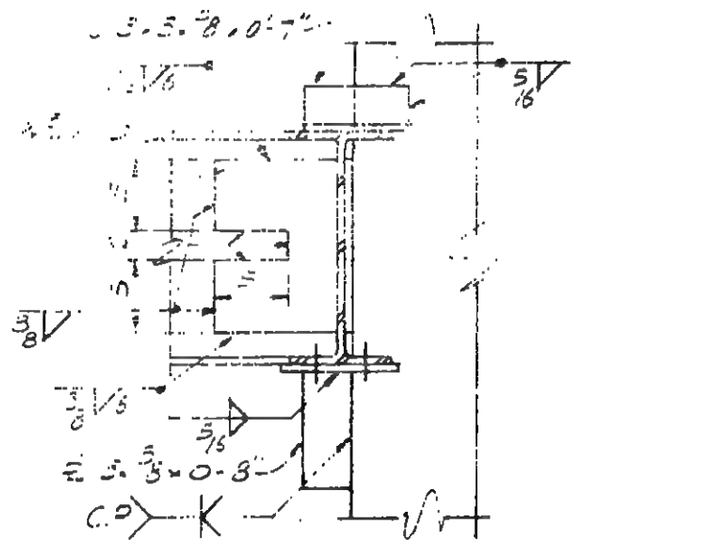

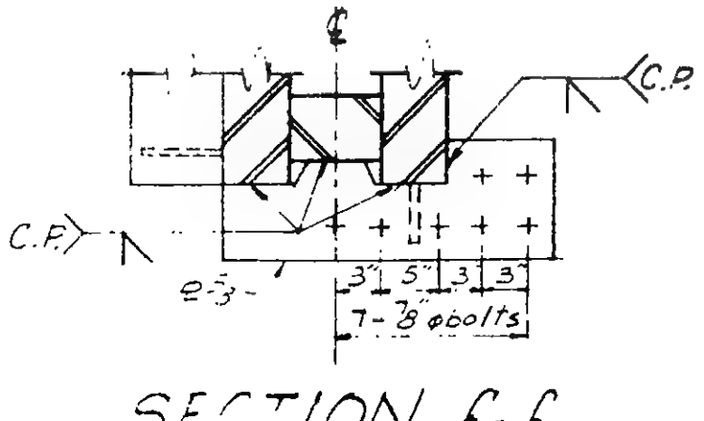

LICENSED PROFESSIONAL ENGINEER
LESLIE E. ROBERTSON
No. 34360
UNIVERSITY OF THE STATE OF NEW YORK

6-AB1-189

WORTHINGTON, SKILLING, HELLE & JACKSON — Civil & Structural Engineers

PROJECT: THE WORLD TRADE CENTER | TITLE: CONNECTION DETAIL 382 A | DATE: 8-14-67

REVISIONS

11-14-67

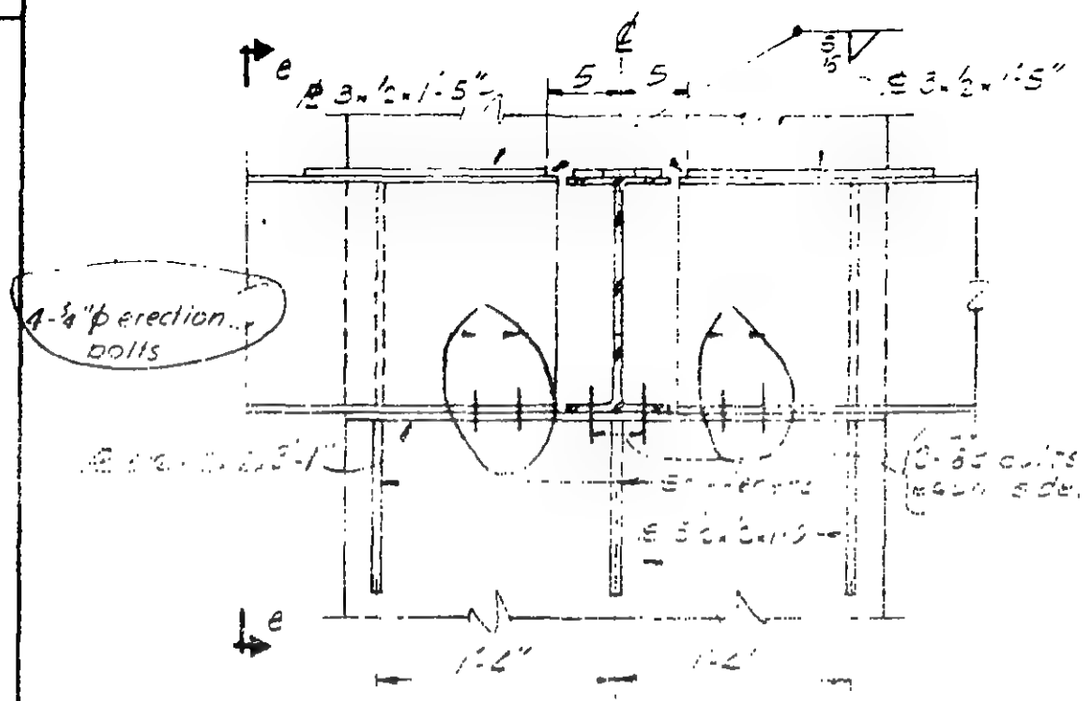

SECTION B-B

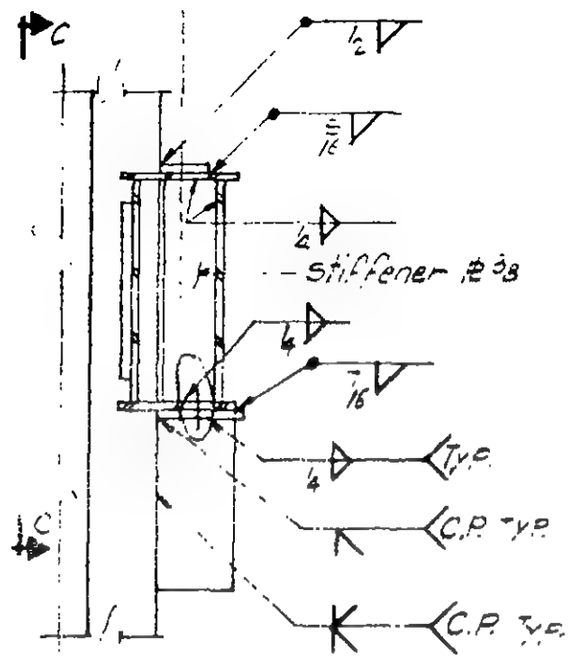

SECTION E-E

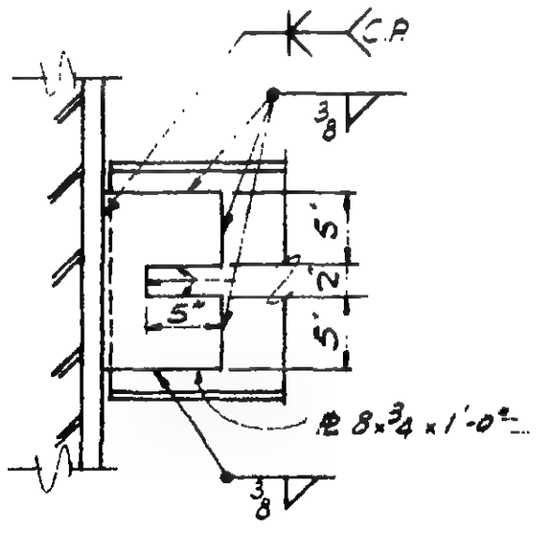

SECTION C-C

LICENSED PROFESSIONAL ENGINEER
LESLIE E. ROBERTSON
No. 34360
UNIVERSITY OF THE STATE OF NEW YORK

WORTHINGTON, SKILLING, HELLE & JACKSON — Civil & Structural Engineers

PROJECT: THE WORLD TRADE CENTER | TITLE: CONNECTION DETAIL 382B | DATE: 8-14-67

REVISIONS

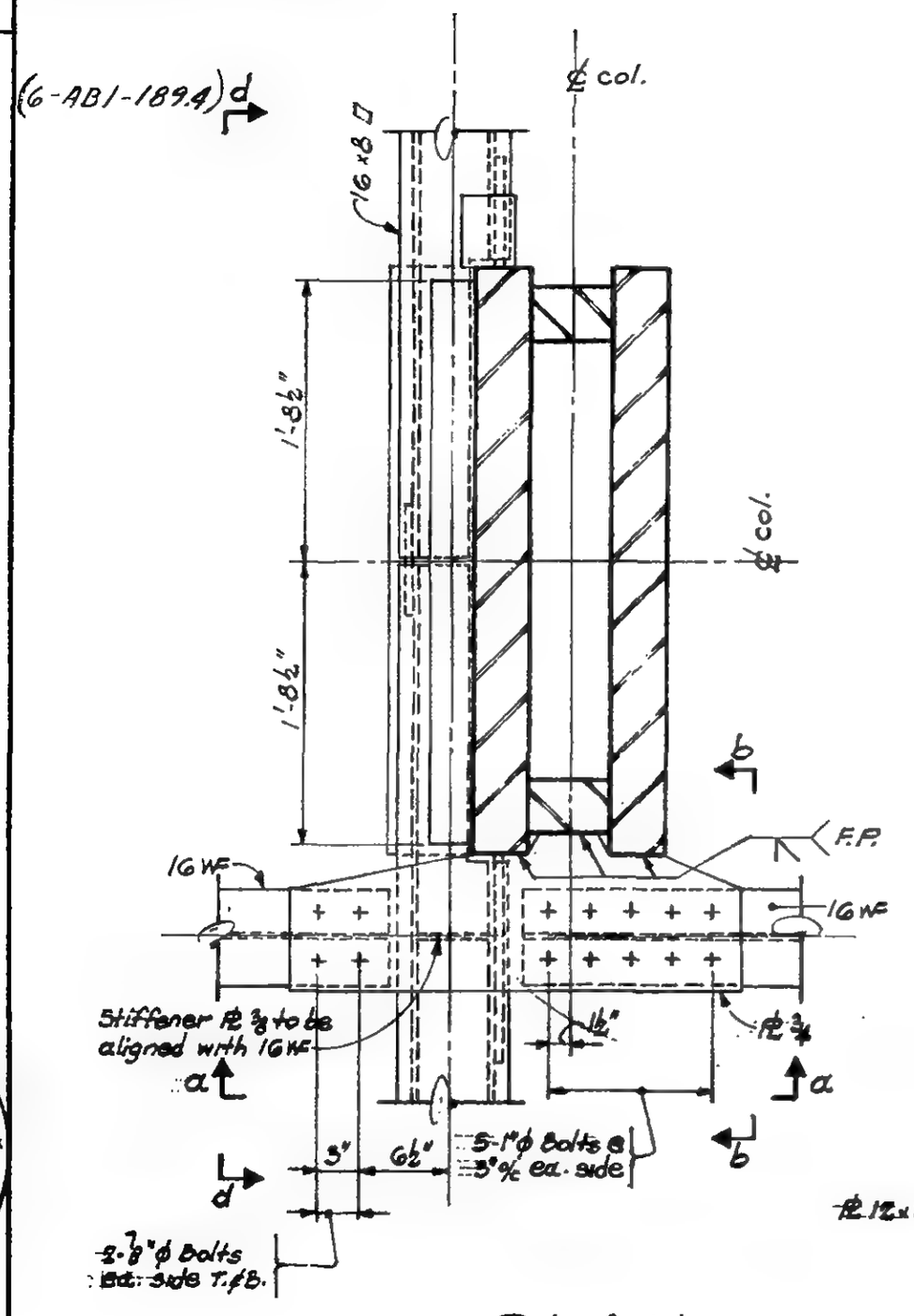

PLAN

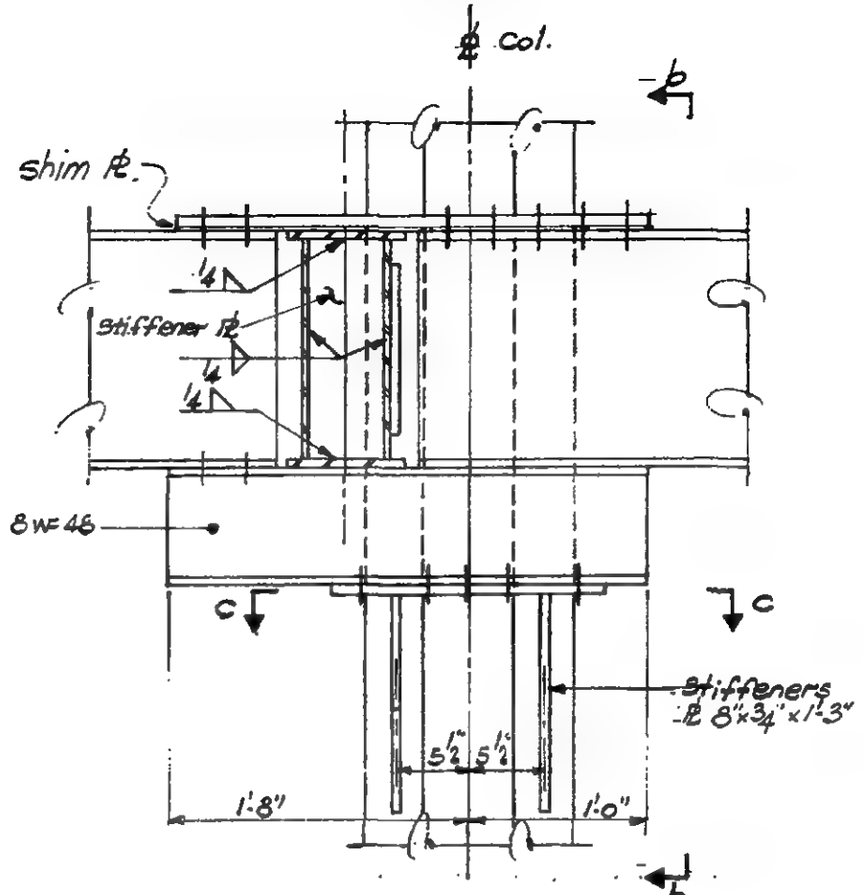

Section a-a

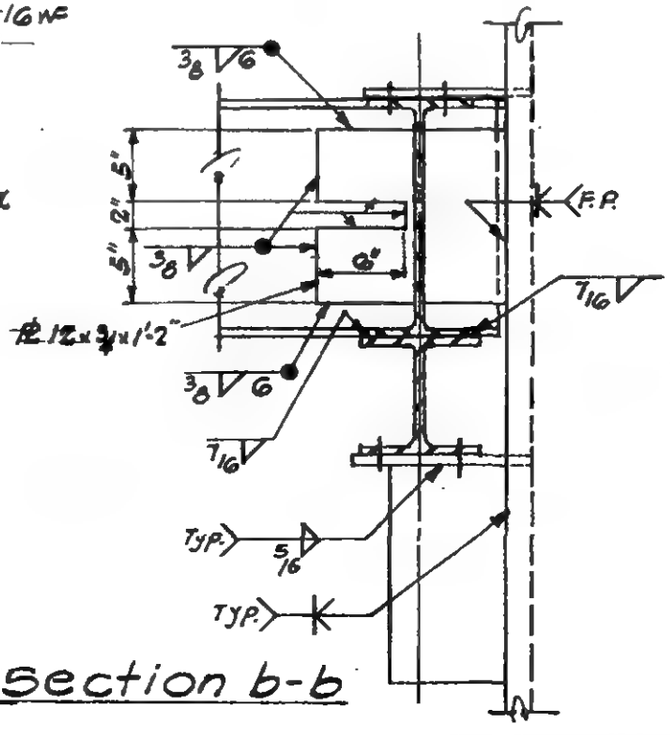

Section b-b

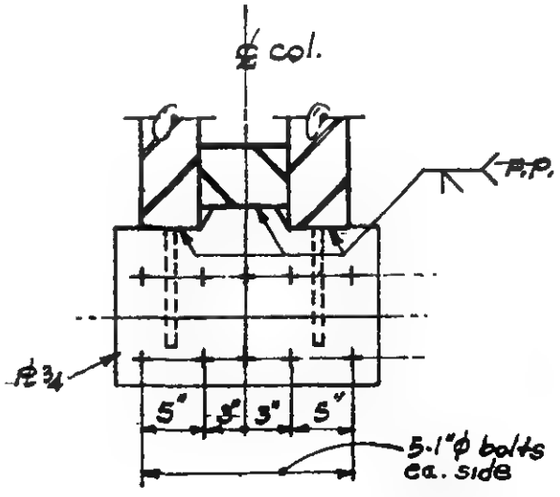

Section c-c

LICENSED PROFESSIONAL ENGINEER
LESLIE E. ROBERTSON
No. 34960
UNIVERSITY OF THE STATE OF NEW YORK

6-AB1-189.2

WORTHINGTON, SKILLING, HELLE & JACKSON — Civil & Structural Engineers

PROJECT: THE WORLD TRADE CENTER | TITLE: CONNECTION DETAIL 382 B | DATE: 8-14-67

REVISIONS

11/14/67

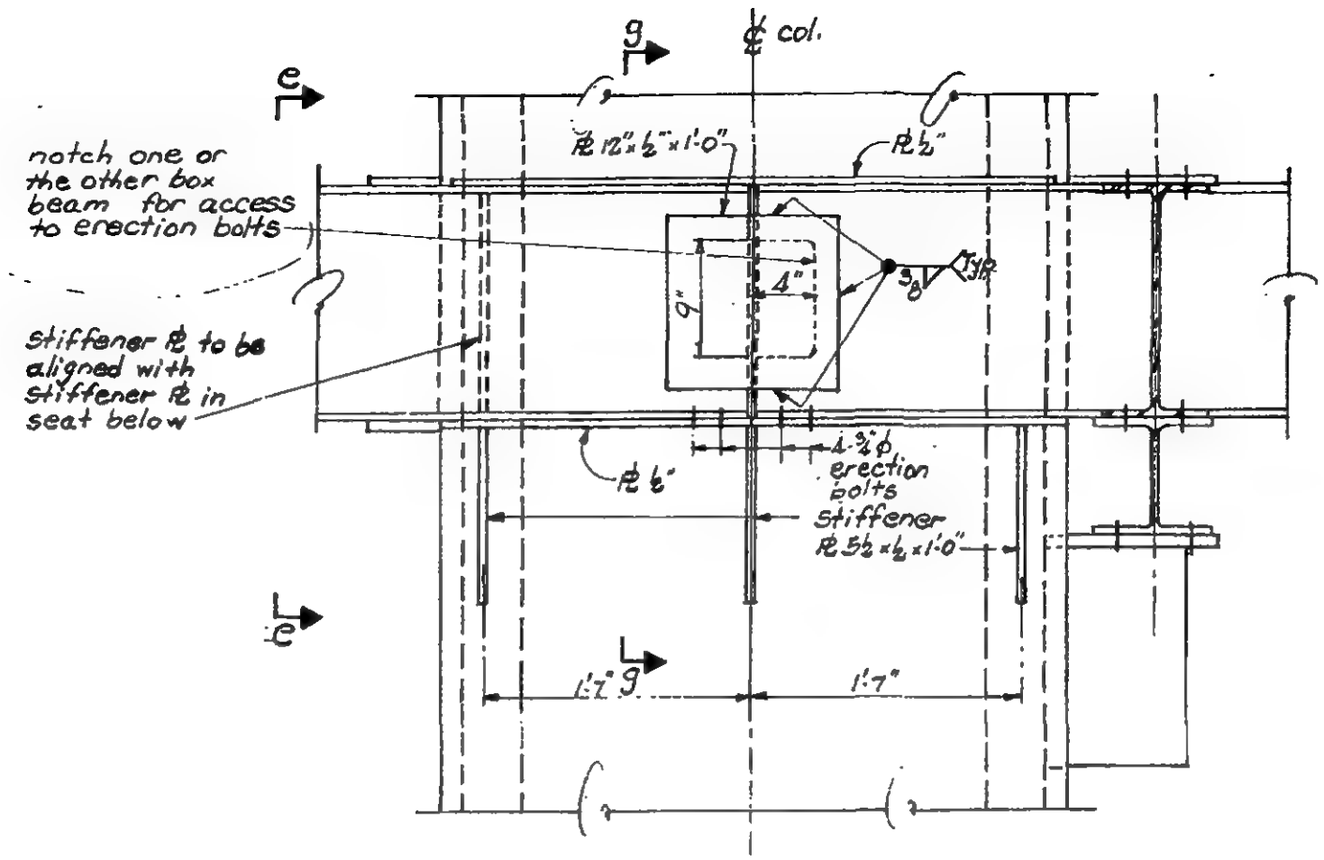

Section d-d

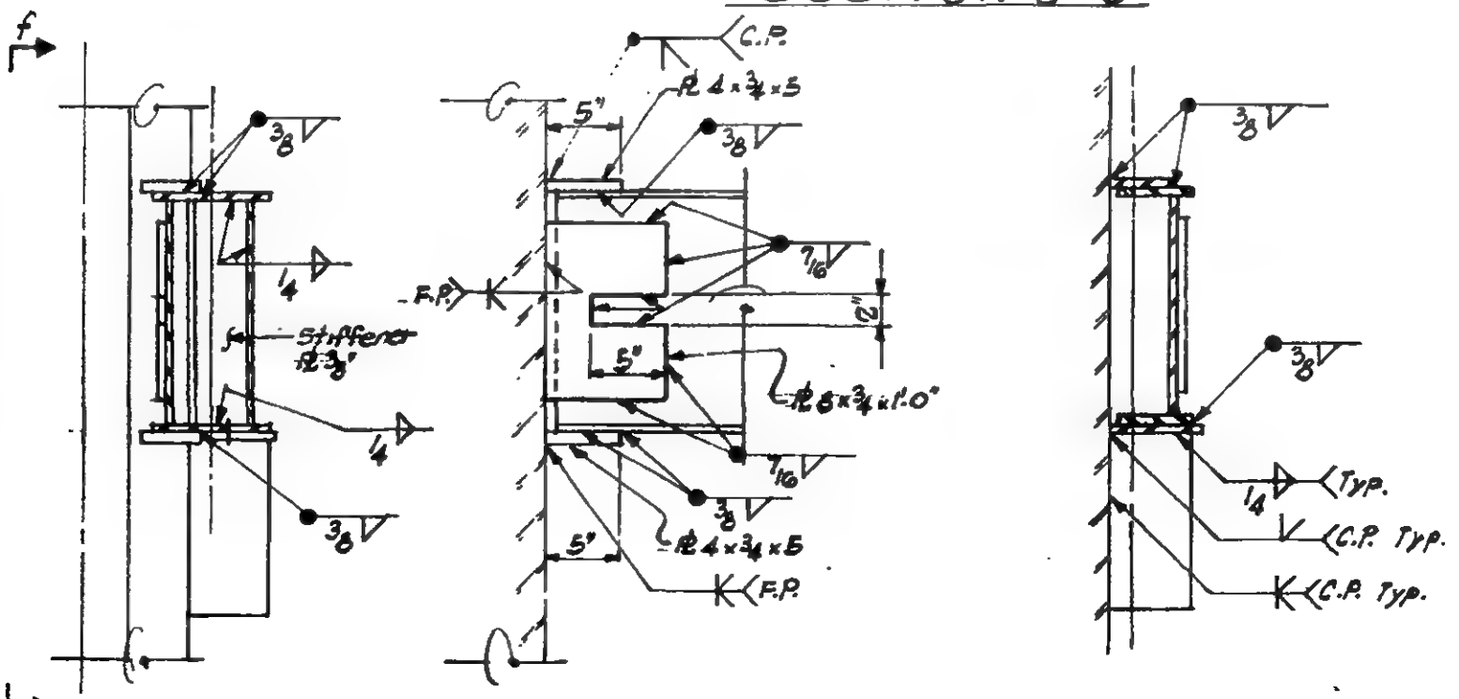

Section e-e | Section f-f | Section g-g

LICENSED PROFESSIONAL ENGINEER — LESLIE E. ROBERTSON — No. 34360 — UNIVERSITY OF THE STATE OF NEW YORK

G-AB1-189.3

WORTHINGTON, SKILLING, HELLE & JACKSON — Civil & Structural Engineers

PROJECT: THE WORLD TRADE CENTER | TITLE: CONNECTION DETAIL 382C | DATE: 8-14-67

REVISIONS

11/14/67

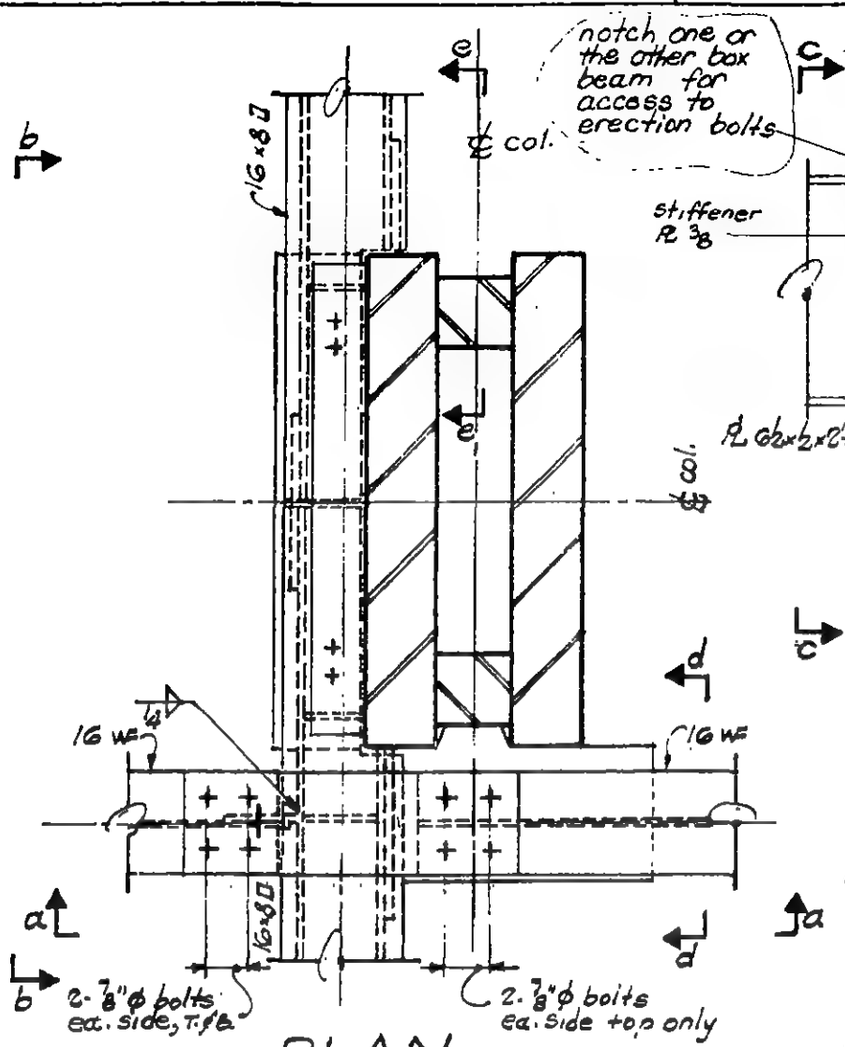

PLAN

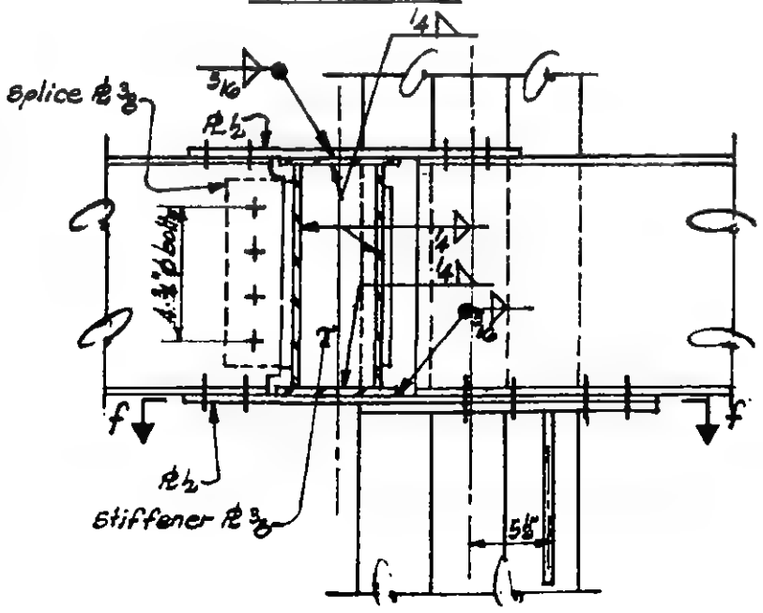

Section a-a

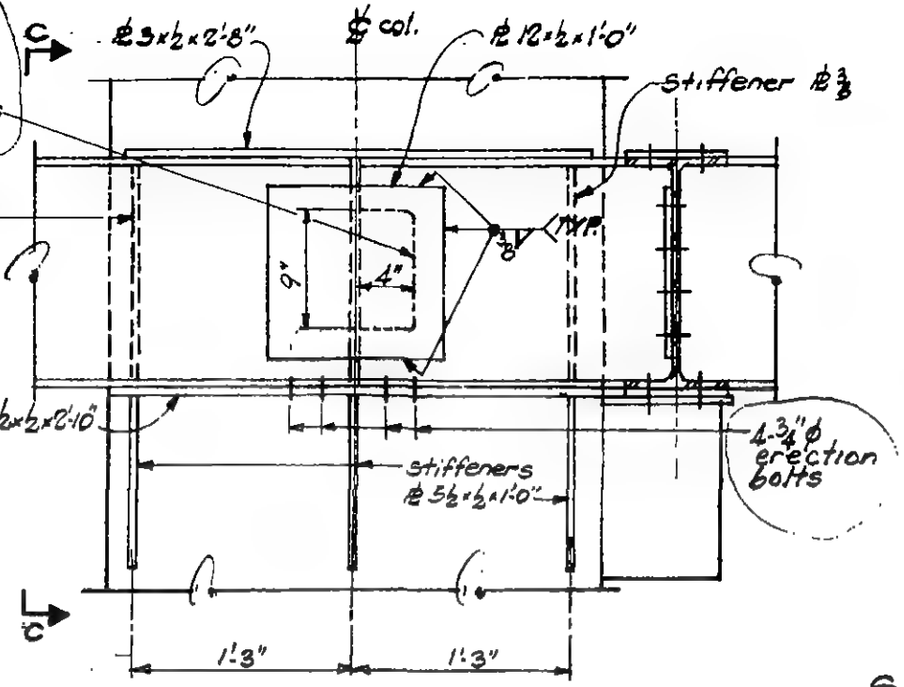

Section b-b

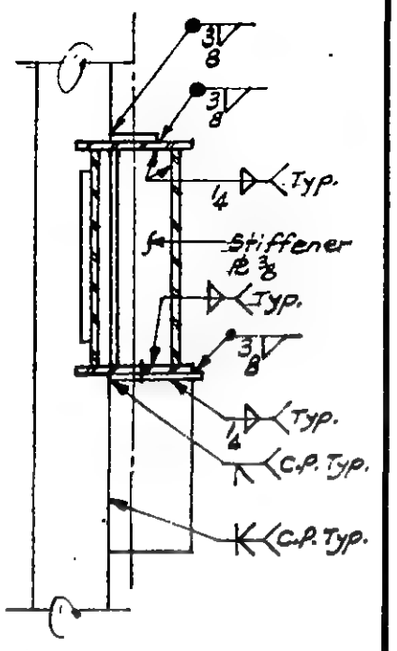

Section c-c

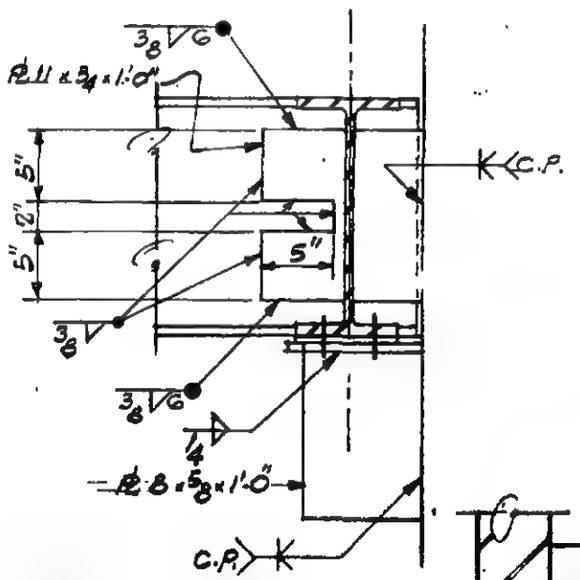

Section d-d

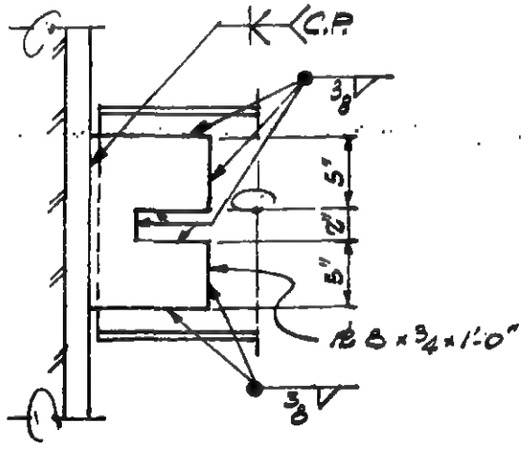

Section e-e

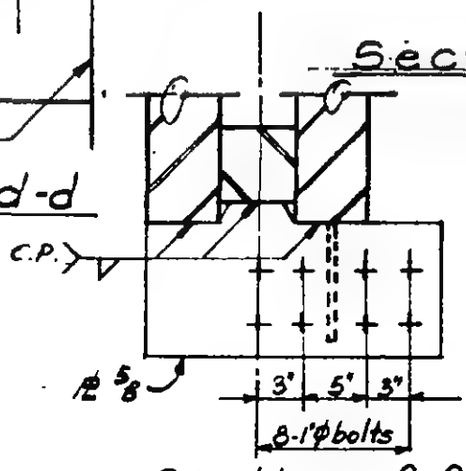

Section f-f

6-ABI-189.4

LICENSED PROFESSIONAL ENGINEER — LESLIE E. ROBERTSON — No. 34360 — UNIVERSITY OF THE STATE OF NEW YORK

WORTHINGTON, SKILLING, HELLE & JACKSON — Civil & Structural Engineers

PROJECT THE WORLD TRADE CENTER | TITLE CONNECTION DETAIL 382 D | DATE 7-17-68

REVISIONS

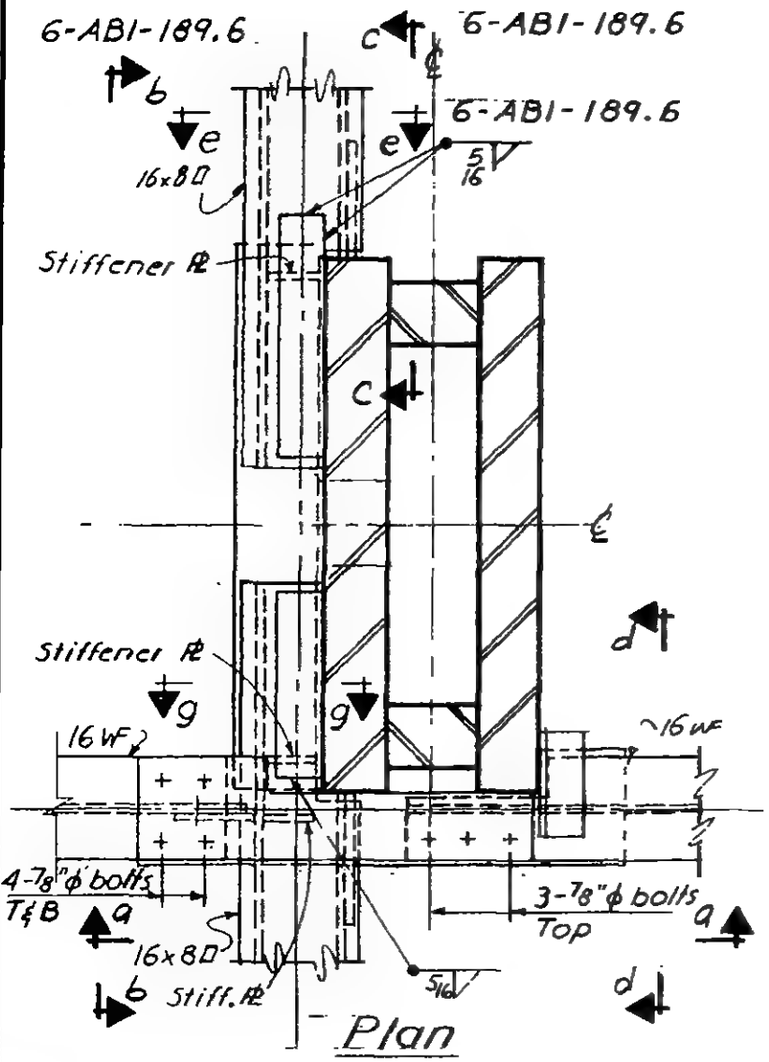

Plan

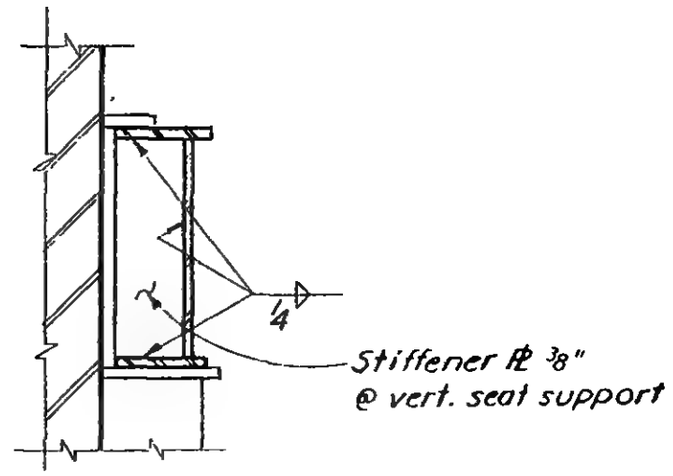

Section g-g

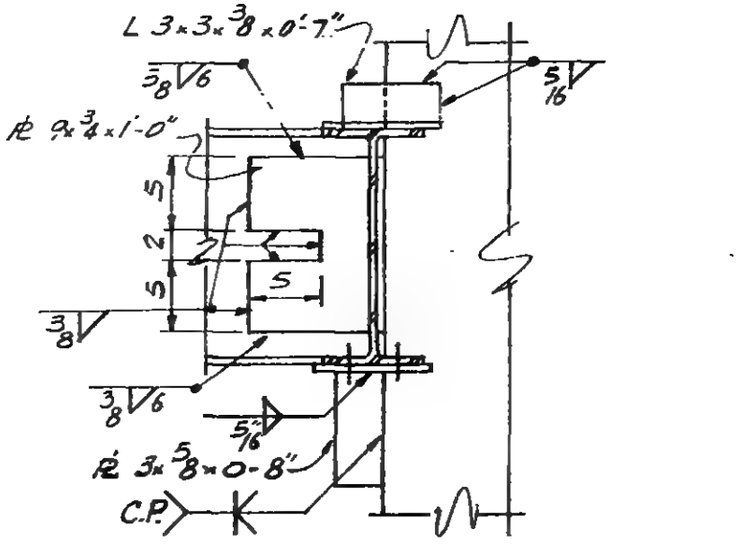

Section d-d

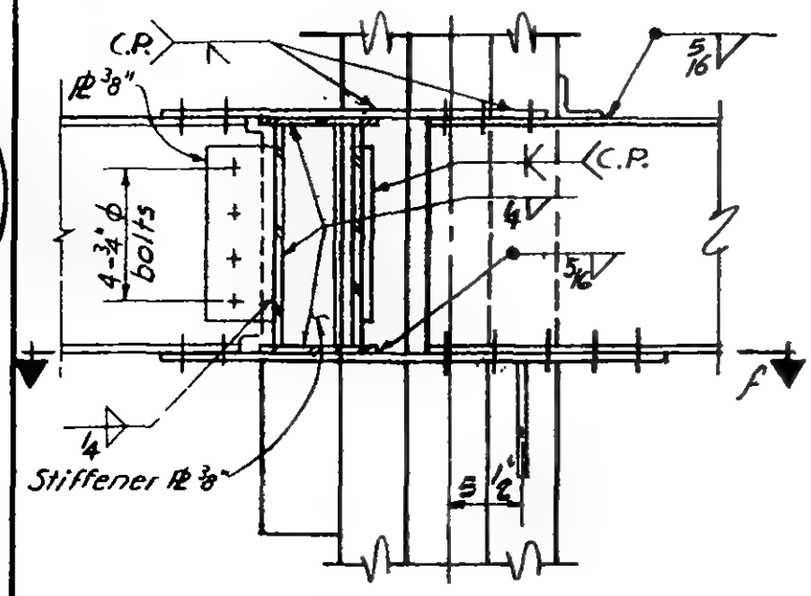

Section a-a

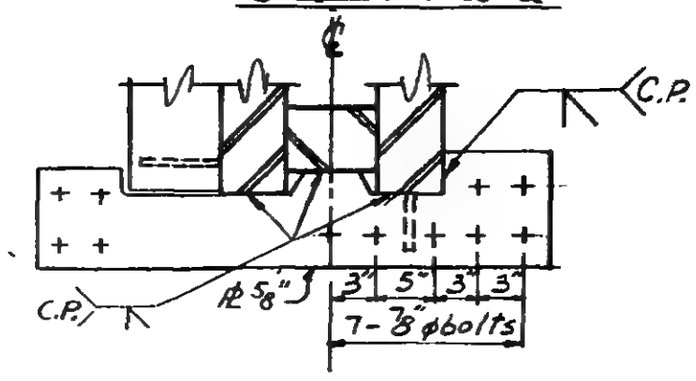

Section f-f

LICENSED PROFESSIONAL ENGINEER LESLIE E. ROBERTSON No. 34360 UNIVERSITY OF THE STATE OF NEW YORK

6-ABI-189.5

WORTHINGTON, SKILLING, HELLE & JACKSON — Civil & Structural Engineers

PROJECT: THE WORLD TRADE CENTER | TITLE: CONNECTION DETAIL 382 D | DATE: 7-17-68

REVISIONS

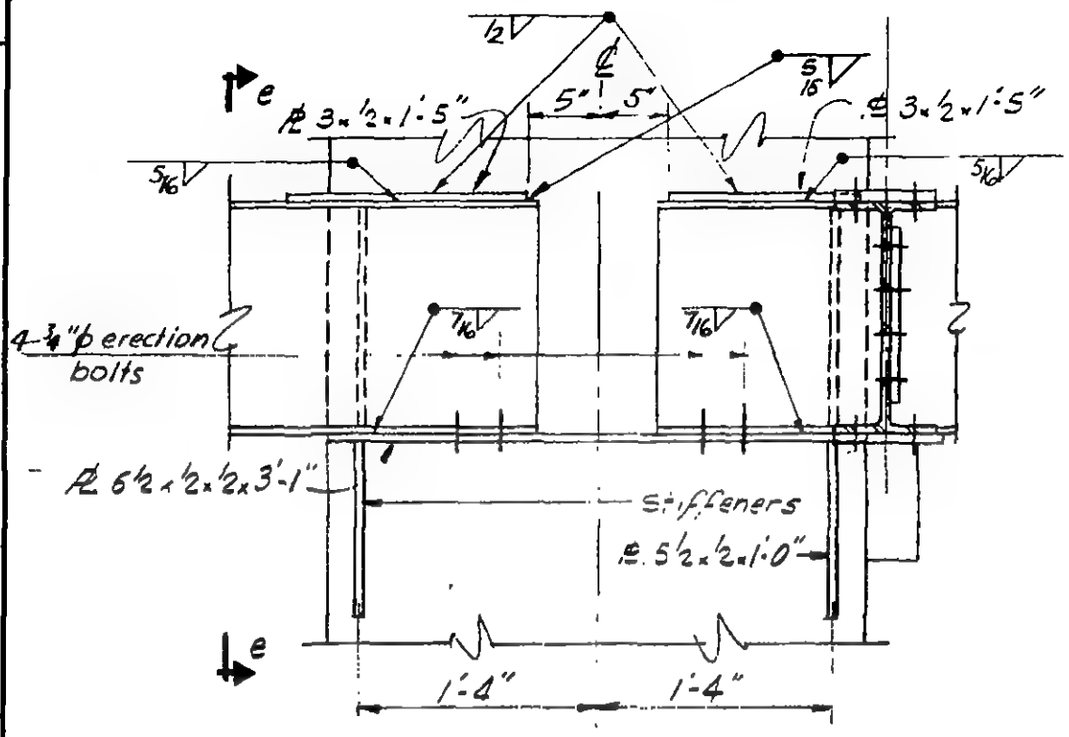

Section b-b

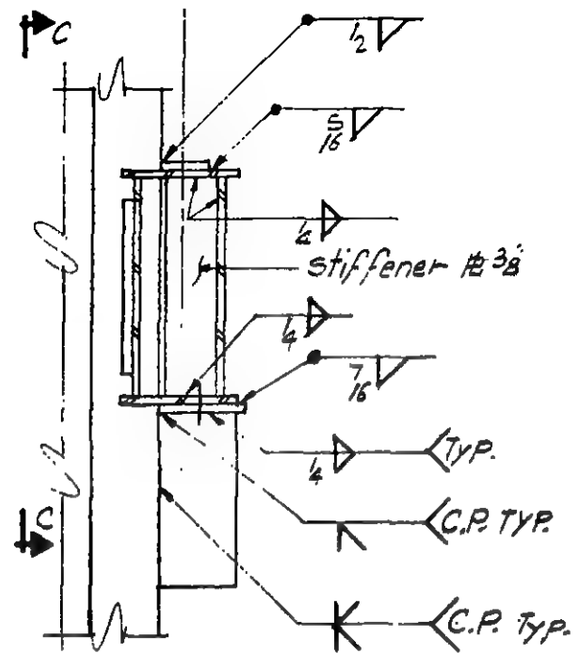

Section e-e

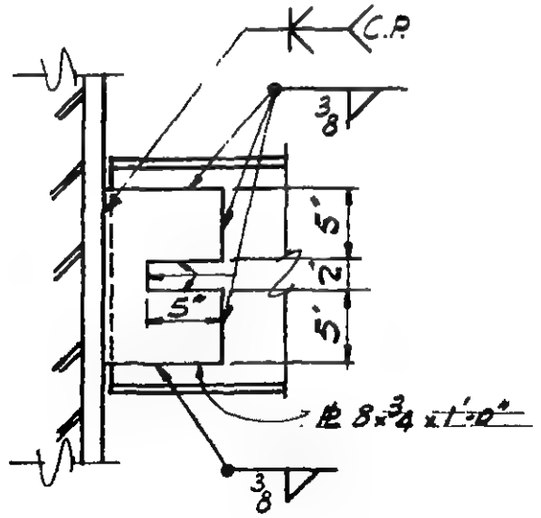

Section c-c

LICENSED PROFESSIONAL ENGINEER
LESLIE E. ROBERTSON
No. 34360
UNIVERSITY OF THE STATE OF NEW YORK

6-AB1-189.6

WORTHINGTON, SKILLING, HELLE & JACKSON — Civil & Structural Engineers

PROJECT: THE WORLD TRADE CENTER | TITLE: CONNECTION DETAIL 383 A | DATE: 6-19-67

REVISIONS

8-14-67
11-14-67

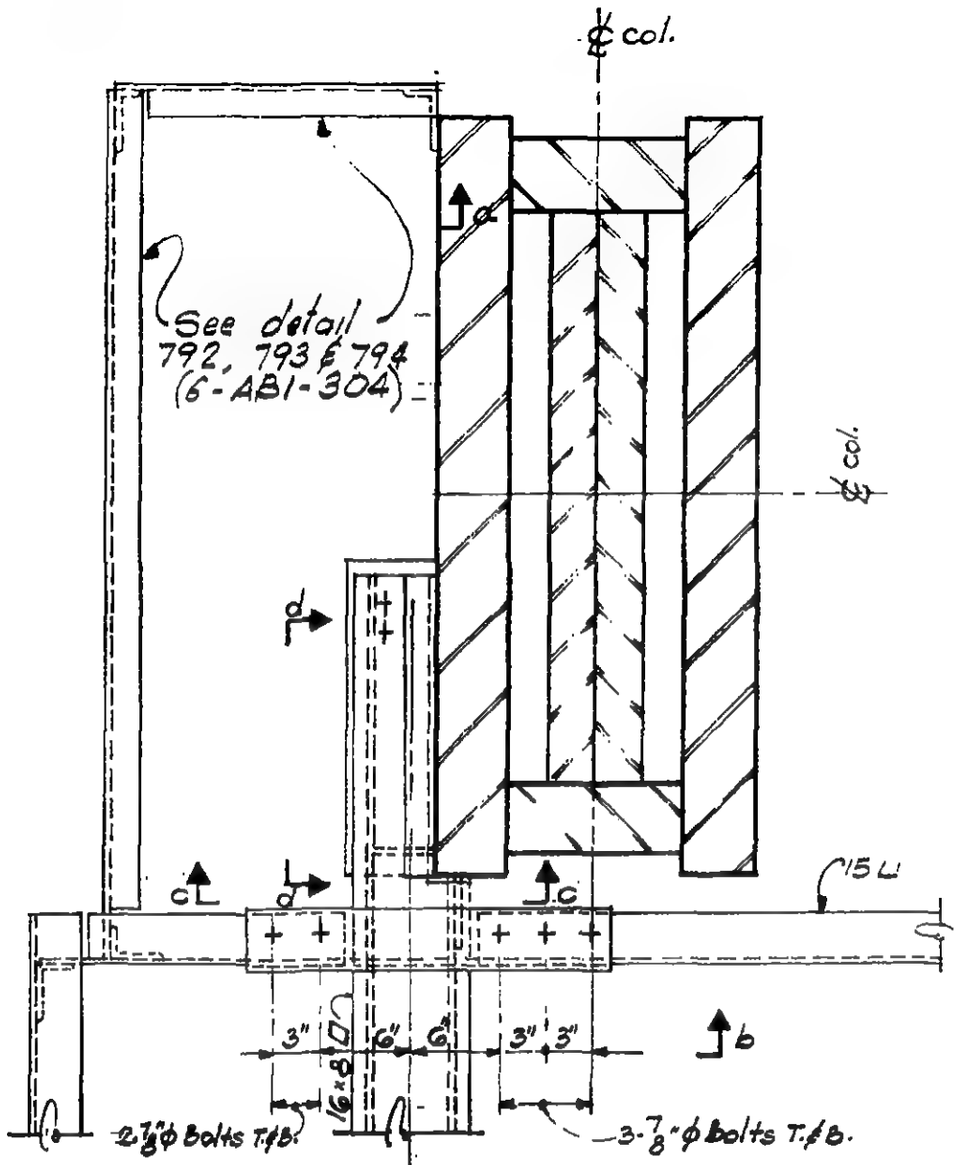

PLAN

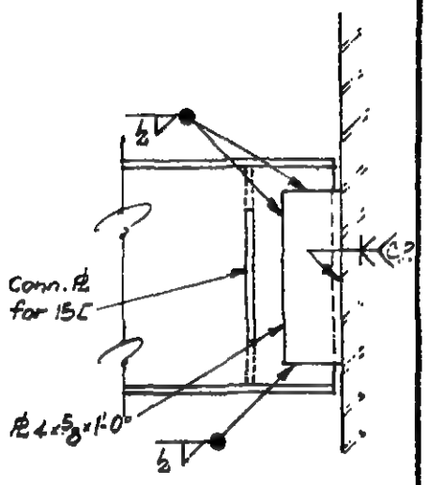

Section e-e

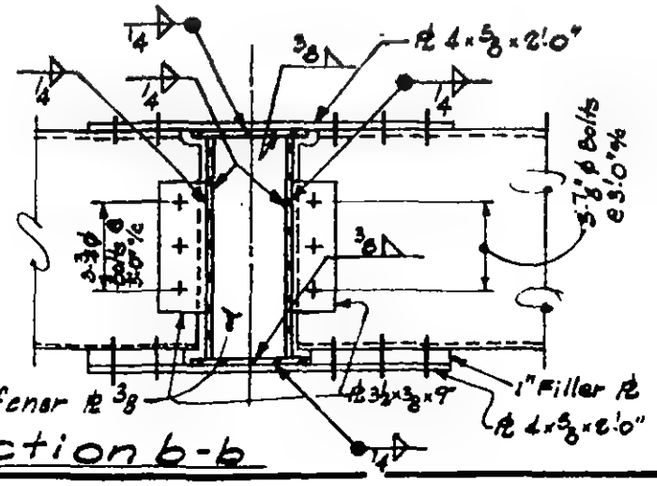

Section b-b

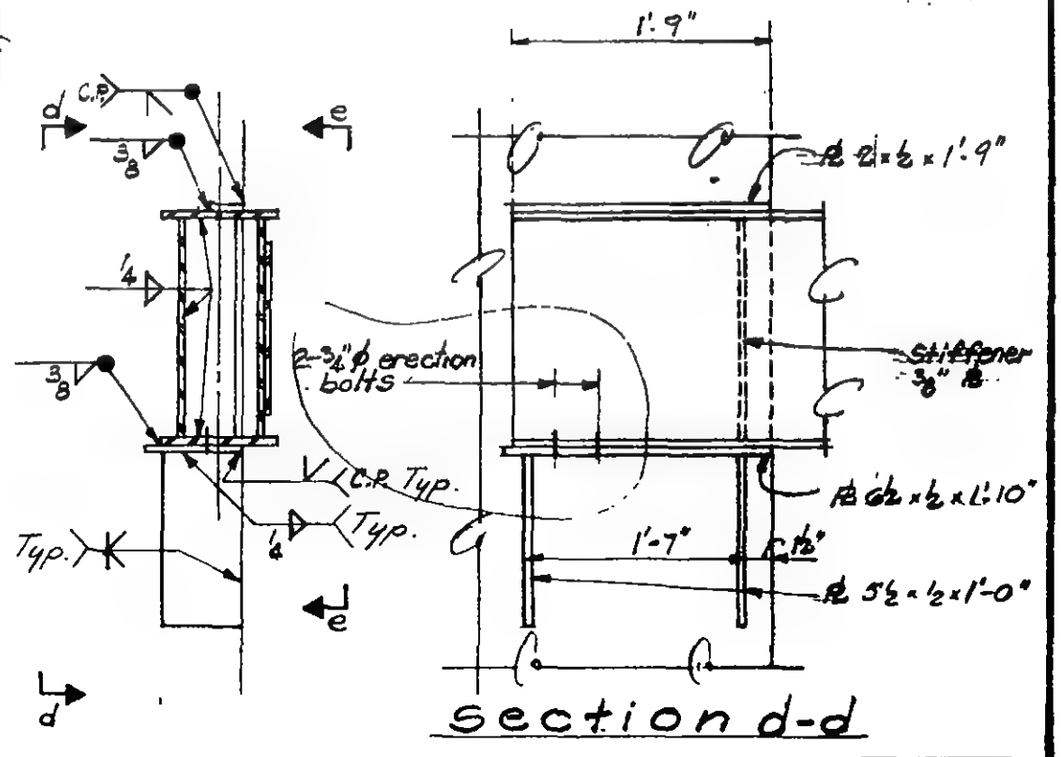

Section c-c

Section d-d

6-AB1-190

LICENSED PROFESSIONAL ENGINEER
LESLIE E. ROBERTSON
No. 34360
UNIVERSITY OF THE STATE OF NEW YORK

WORTHINGTON, SKILLING, HELLE & JACKSON — Civil & Structural Engineers

PROJECT THE WORLD TRADE CENTER | TITLE CONNECTION DETAIL 384 A, B | DATE 7/14/67

REVISIONS

8-5-67

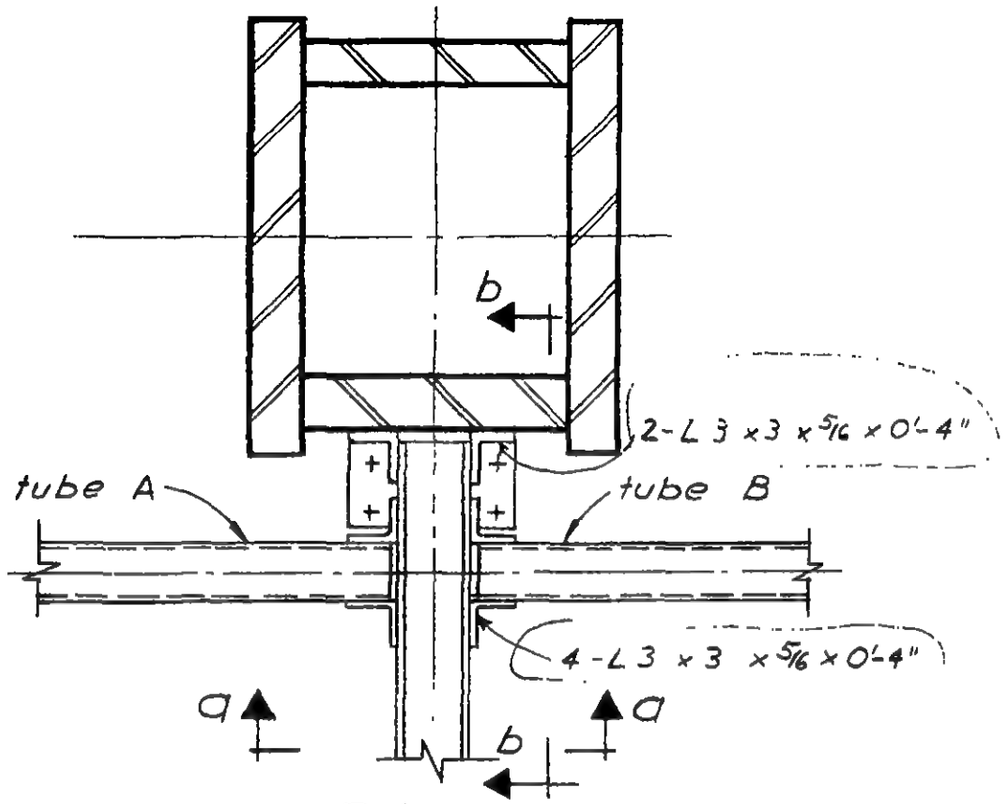

Plan

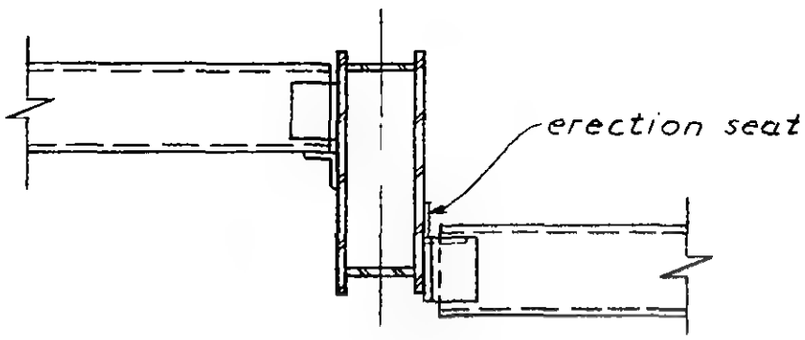

Section a-a 384 B

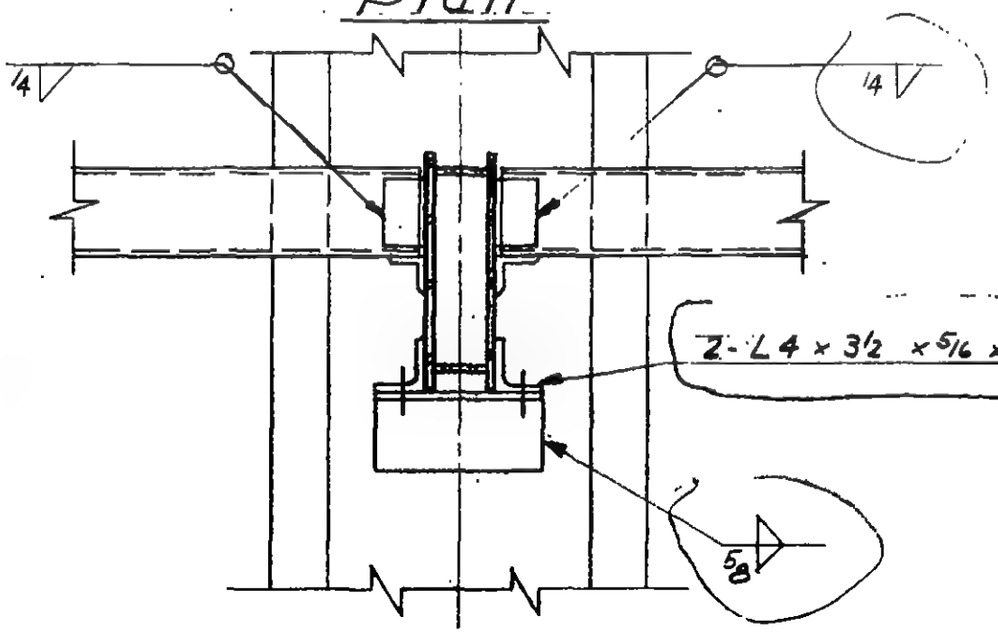

Section a-a 384 A

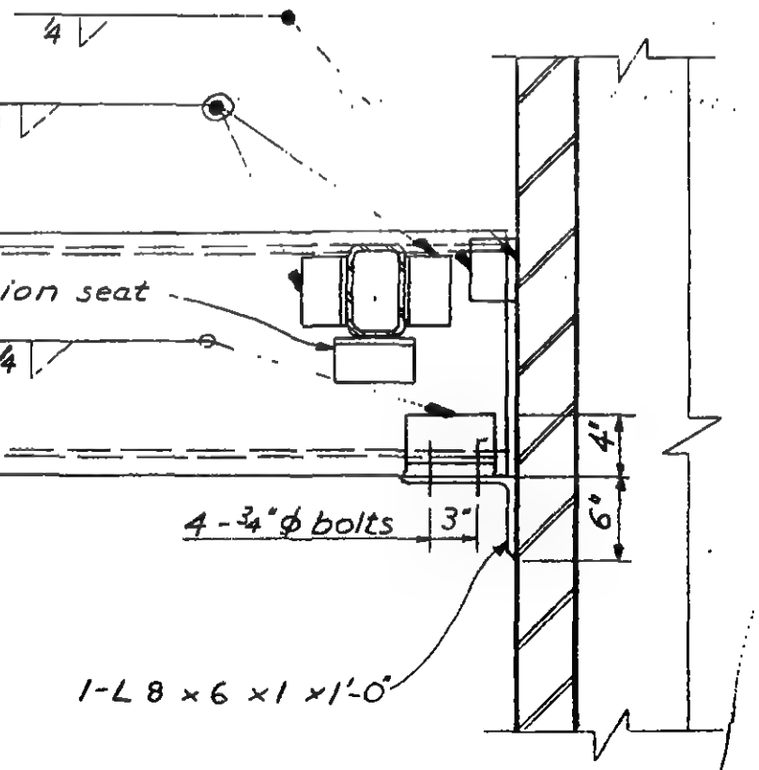

Section b-b

6-AB1-191

LICENSED PROFESSIONAL ENGINEER
LESLIE E. ROBERTSON
No. 34360
UNIVERSITY OF THE STATE OF NEW YORK

WORTHINGTON, SKILLING, HELLE & JACKSON — Civil & Structural Engineers

PROJECT: THE WORLD TRADE CENTER | TITLE: CONNECTION DETAIL 385 A | DATE: 6-19-67

REVISIONS

8-14-67

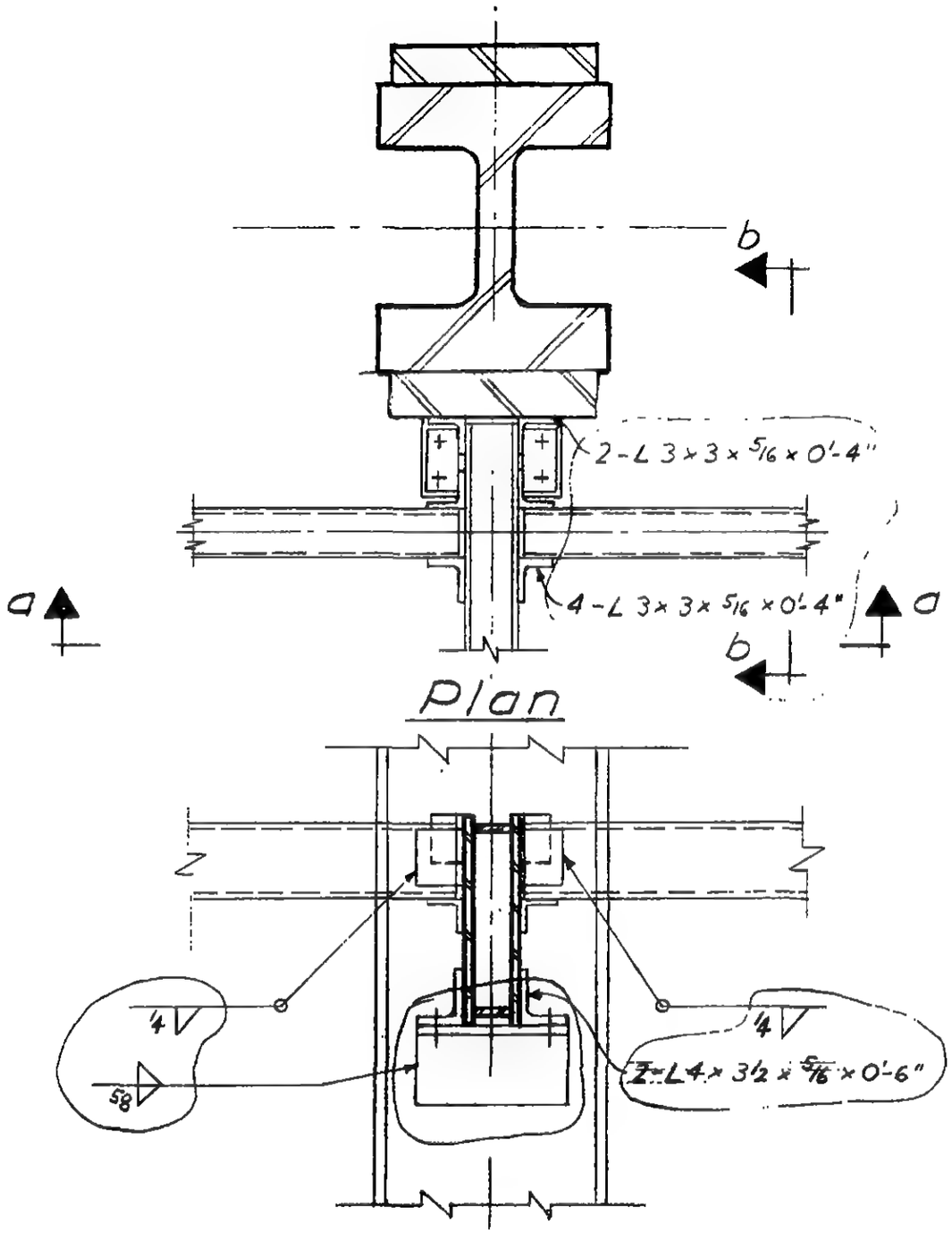

Plan

Section a-a

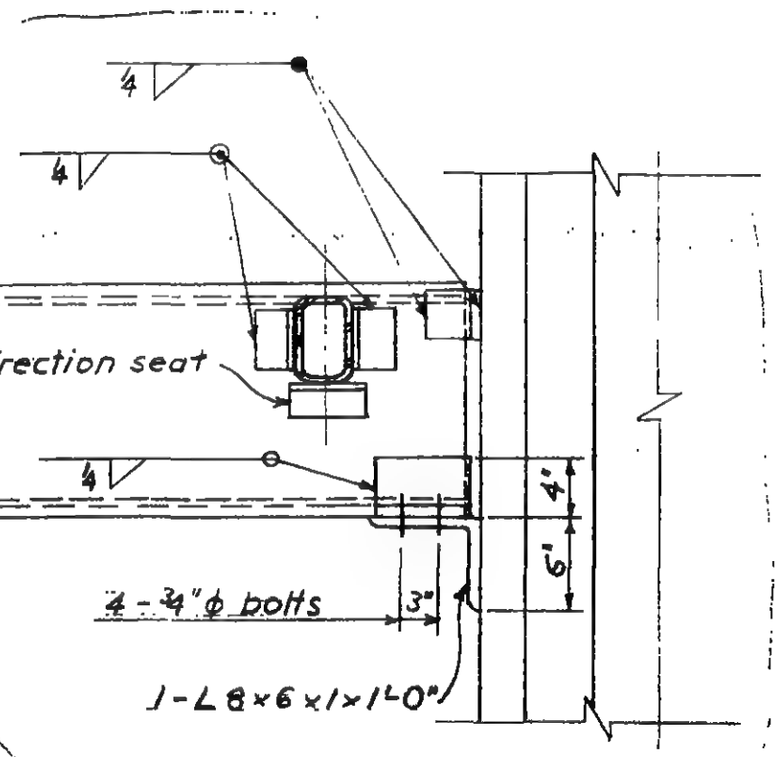

Section b-b

LICENSED PROFESSIONAL ENGINEER
LESLIE E. ROBERTSON
No. 34360
UNIVERSITY OF THE STATE OF NEW YORK

G-ABI-192

WORTHINGTON, SKILLING, HELLE & JACKSON — Civil & Structural Engineers

PROJECT THE WORLD TRADE CENTER | TITLE CONNECTION DETAIL 386 A | DATE 6-19-67

REVISIONS

8-5-67

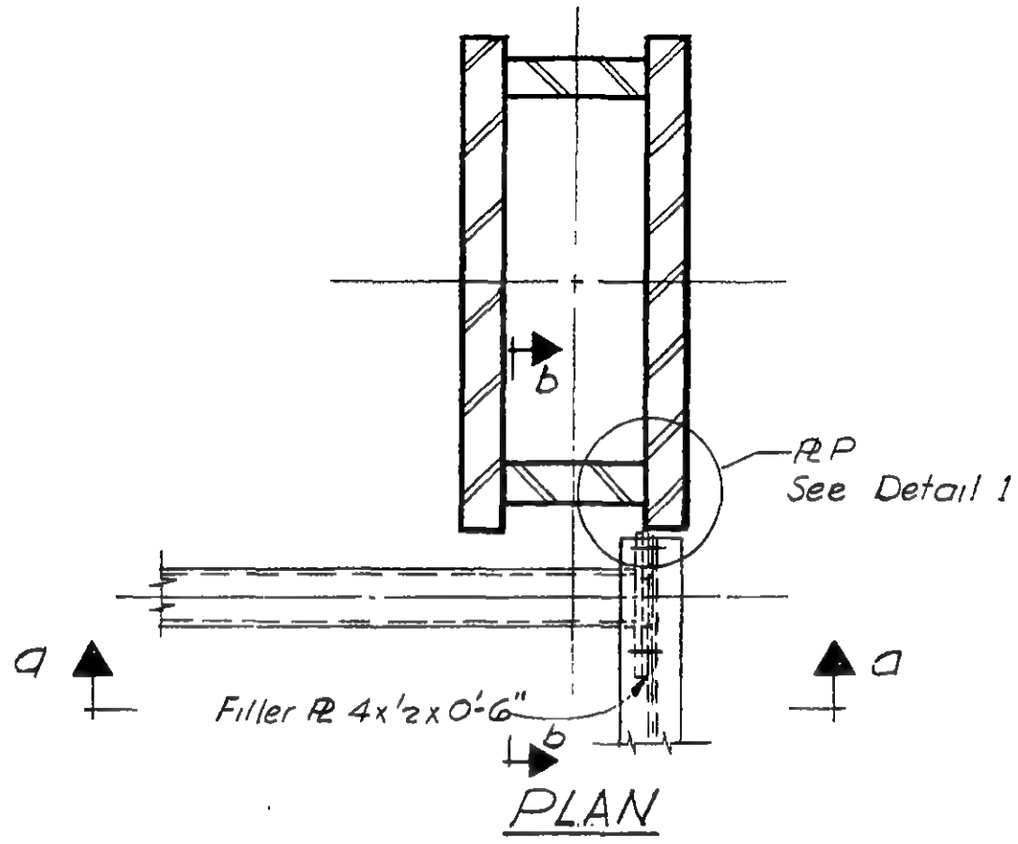

PLAN

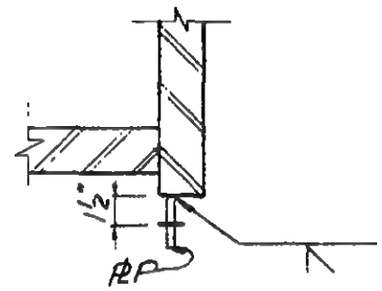

Plan

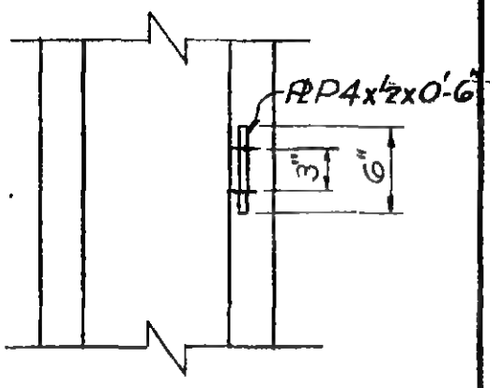

Elevation

Detail 1

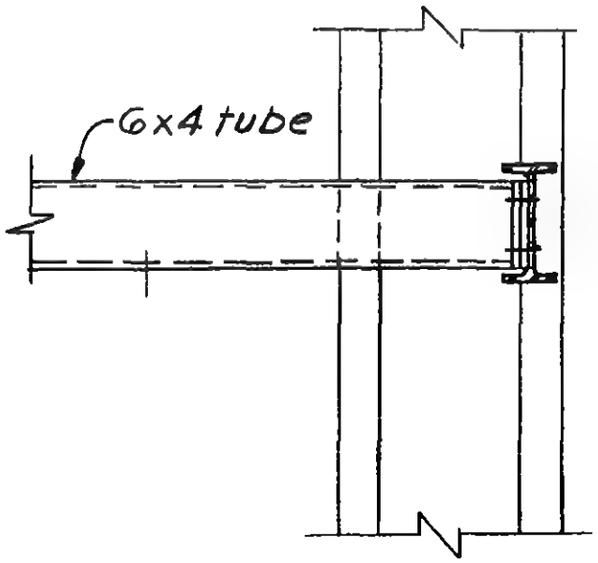

Section a-a

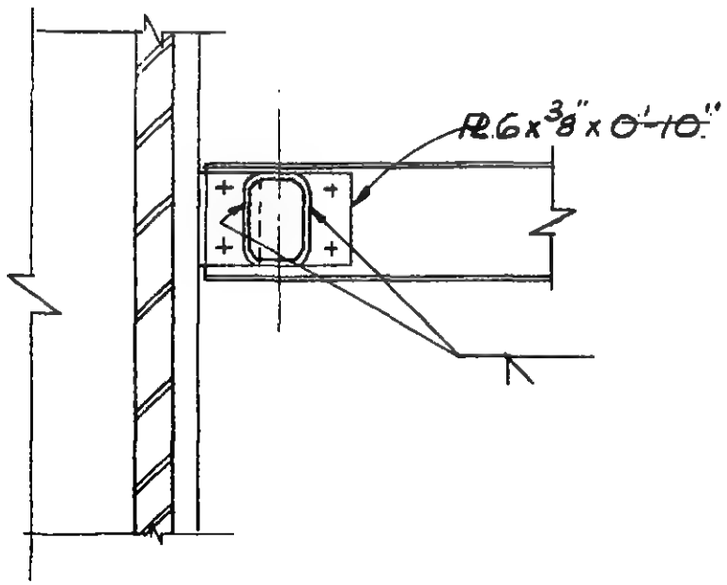

Section b-b

LICENSED PROFESSIONAL ENGINEER
LESLIE E. ROBERTSON
No. 34360
UNIVERSITY OF THE STATE OF NEW YORK

6-AB1-193

WORTHINGTON, SKILLING, HELLE & JACKSON — Civil & Structural Engineers

PROJECT: THE WORLD TRADE CENTER | TITLE: CONNECTION DETAIL 387 A | DATE: 6-19-67

REVISIONS

8-5-67

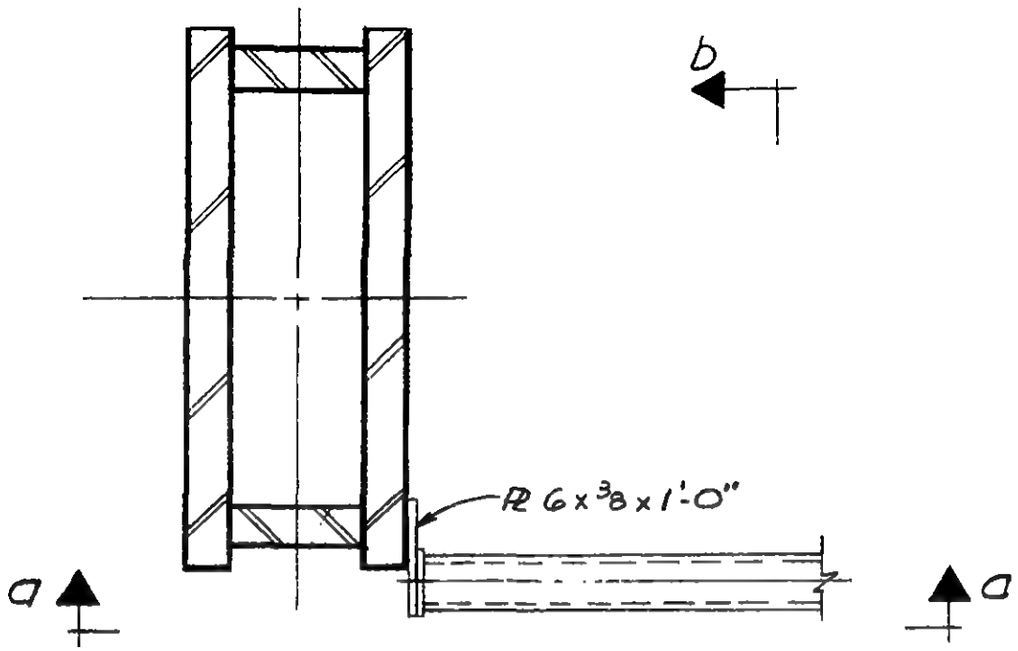

Plan

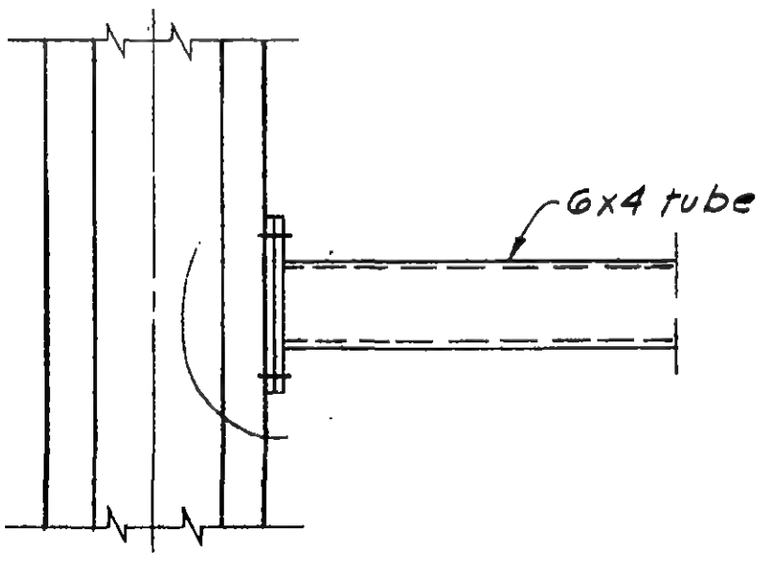

Section a-a

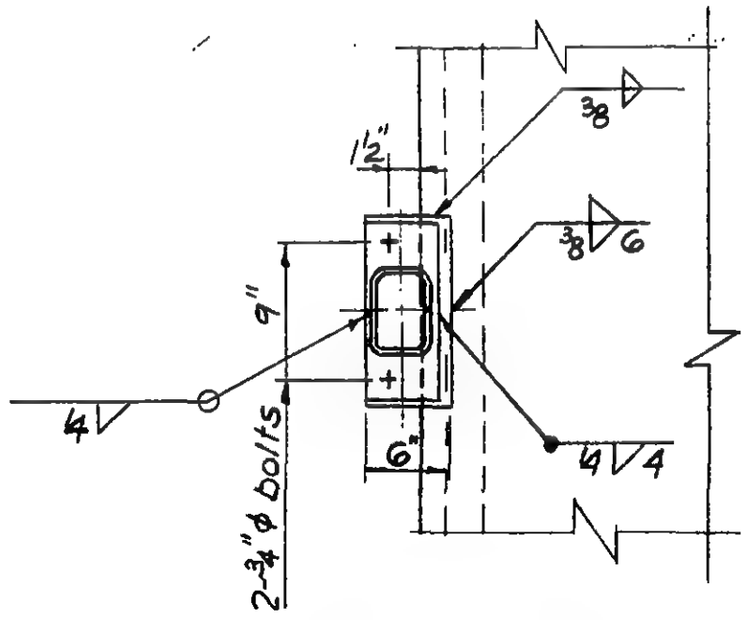

Section b-b

LICENSED PROFESSIONAL ENGINEER
LESLIE E. ROBERTSON
No. 34360
UNIVERSITY OF THE STATE OF NEW YORK

6-ABI-194

WORTHINGTON, SKILLING, HELLE & JACKSON — Civil & Structural Engineers

PROJECT	TITLE	DATE
THE WORLD TRADE CENTER	CONNECTION DETAIL 388 A, (B)	6-19-67

REVISIONS

8-14-67
7-17-68

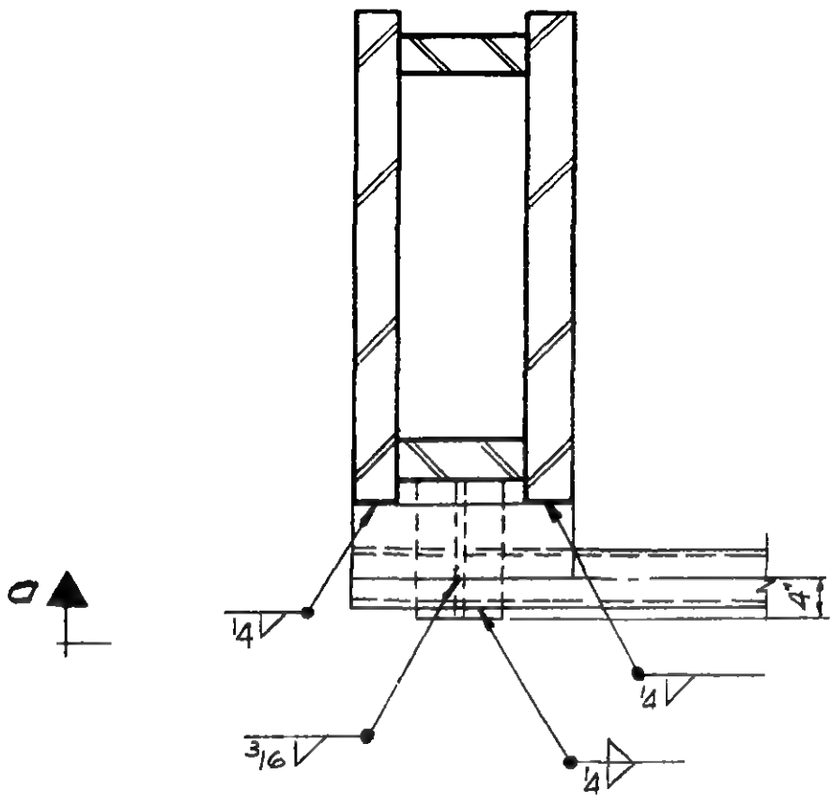

PLAN 338A

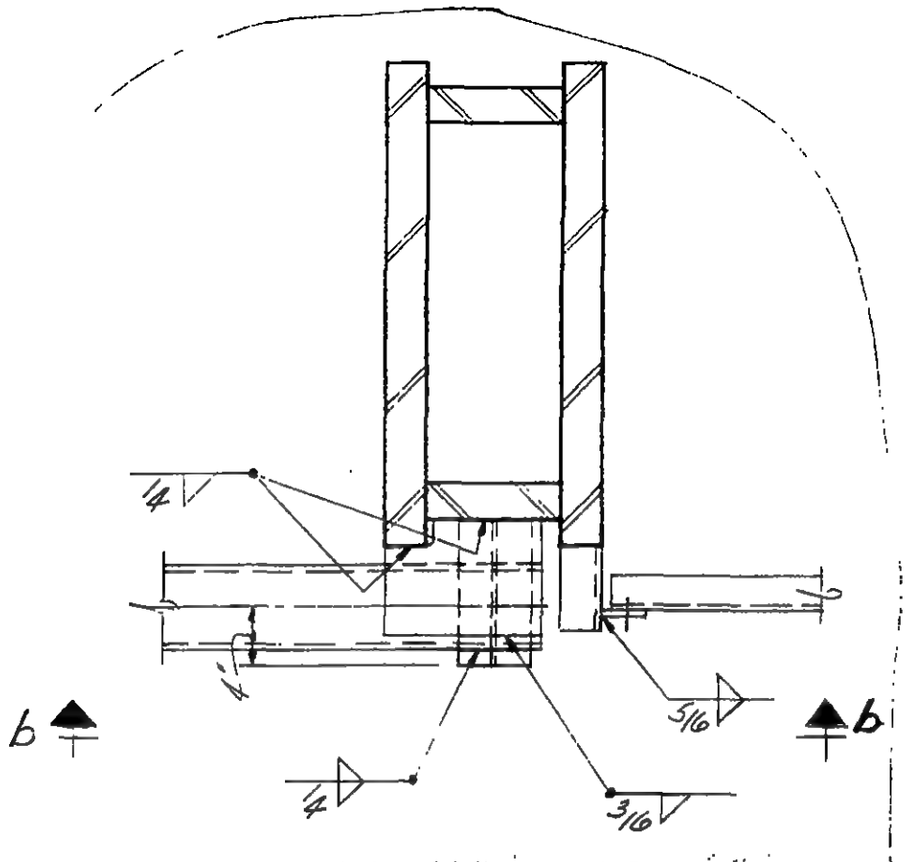

PLAN 338B

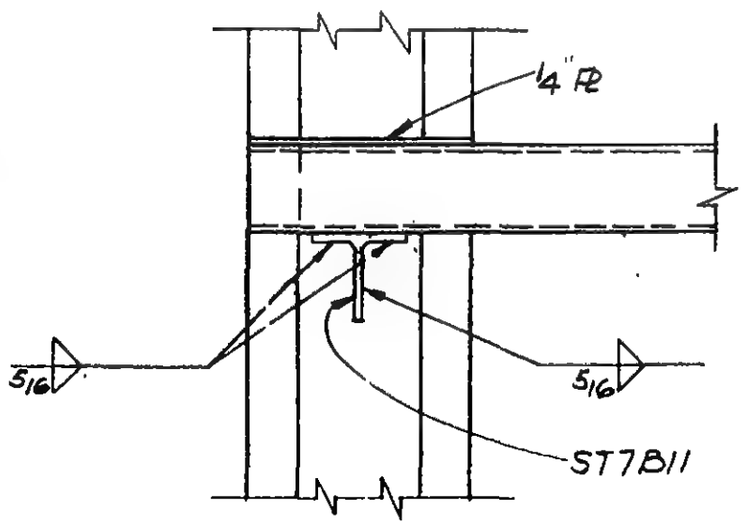

Section a-a

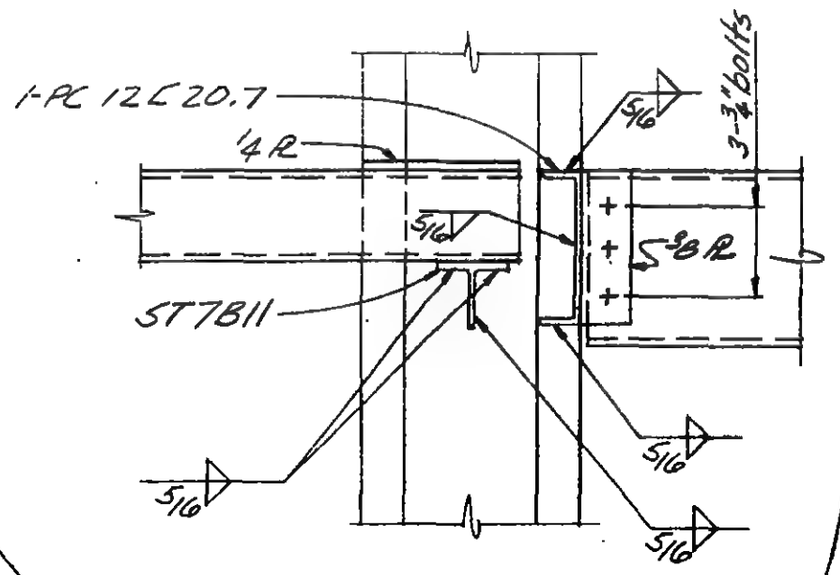

Section b-b

LICENSED PROFESSIONAL ENGINEER
LESLIE E. ROBERTSON
No. 34360
UNIVERSITY OF THE STATE OF NEW YORK

G-AB1-195

WORTHINGTON, SKILLING, HELLE & JACKSON — Civil & Structural Engineers

PROJECT THE WORLD TRADE CENTER | TITLE CONNECTION DETAIL 389 | DATE 6-19-67

REVISIONS

8-5-67

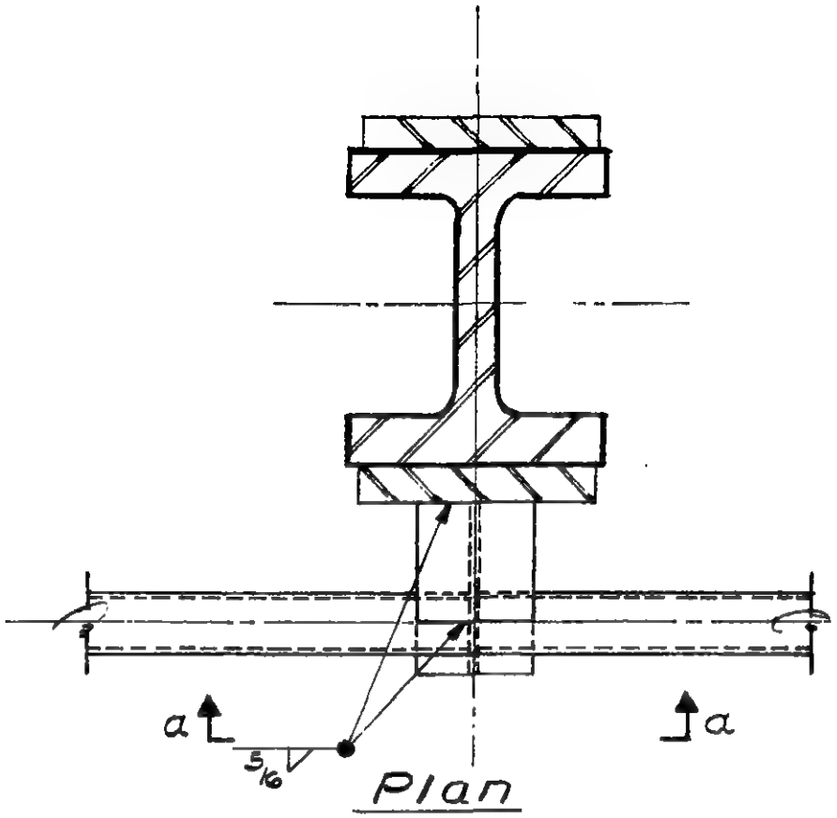

Plan

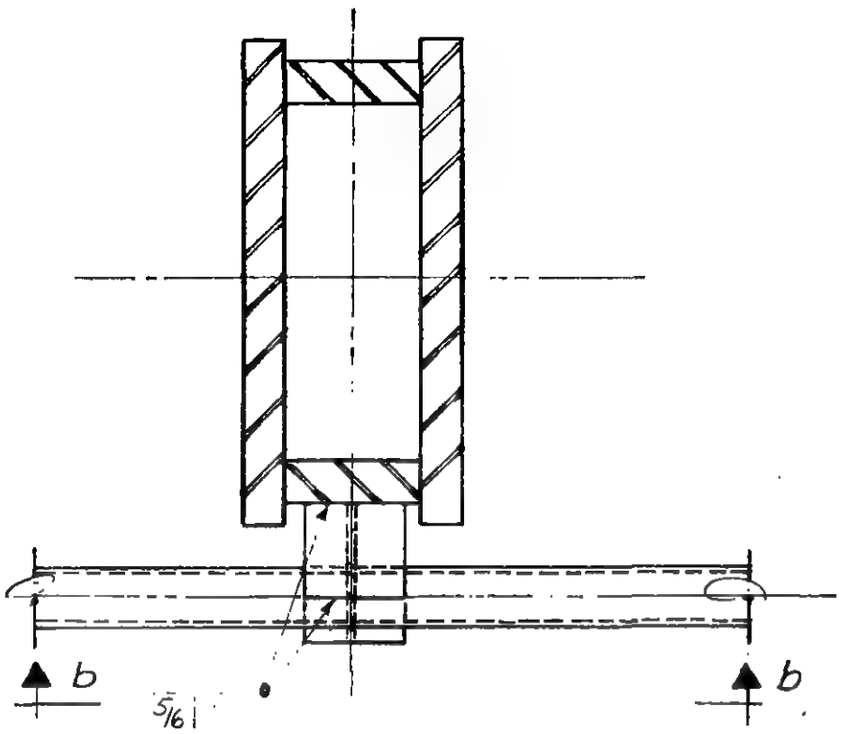

Plan

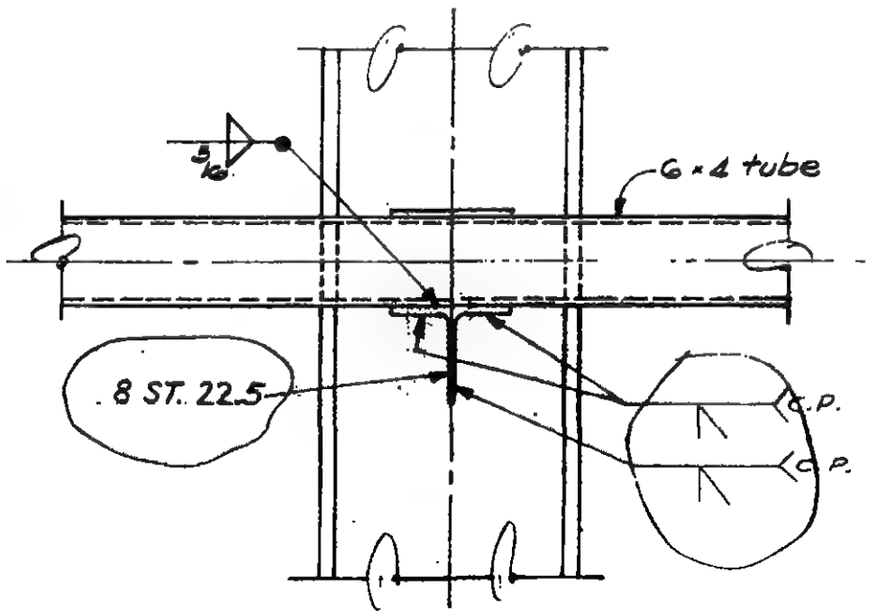

Section a-a

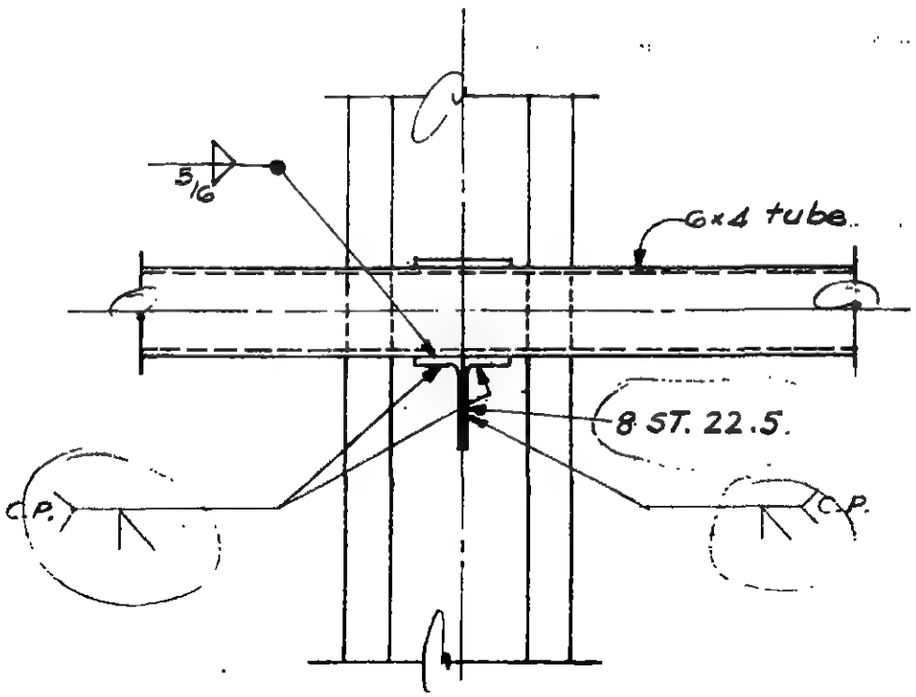

Section b-b

LICENSED PROFESSIONAL ENGINEER
LESLIE E. ROBERTSON
No. 34360
UNIVERSITY OF THE STATE OF NEW YORK

G-AB1-196

WORTHINGTON, SKILLING, HELLE & JACKSON — Civil & Structural Engineers

PROJECT: THE WORLD TRADE CENTER | TITLE: CONNECTION DETAIL 390A | DATE: 6-19-67

REVISIONS

8-5-67

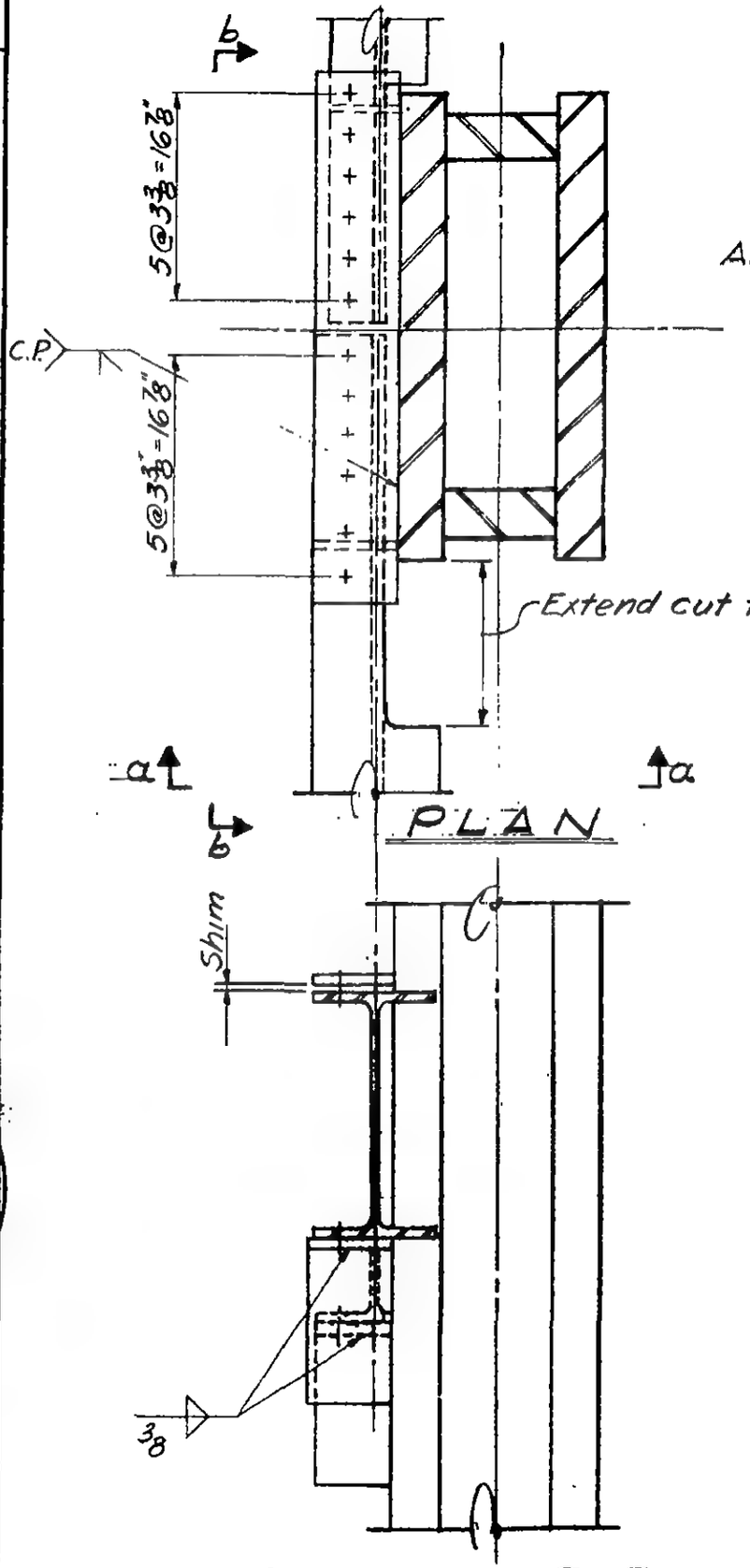

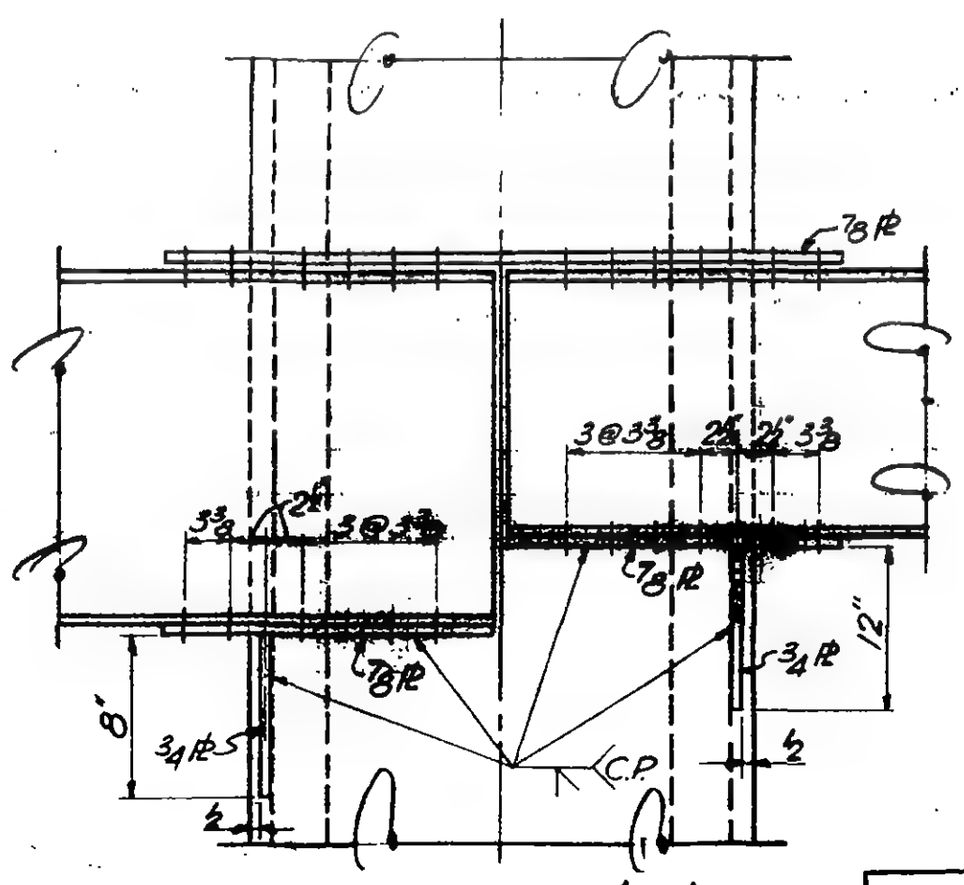

6-AB1-197

LICENSED PROFESSIONAL ENGINEER
LESLIE E. ROBERTSON
No. 34360
UNIVERSITY OF THE STATE OF NEW YORK

SKILLING, HELLE, CHRISTIANSEN, ROBERTSON — Structural & Civil Engineers

PROJECT: THE WORLD TRADE CENTER | TITLE: CONNECTION DETAIL 391A,C | DATE: 2-9-68

REVISIONS

7-17-68

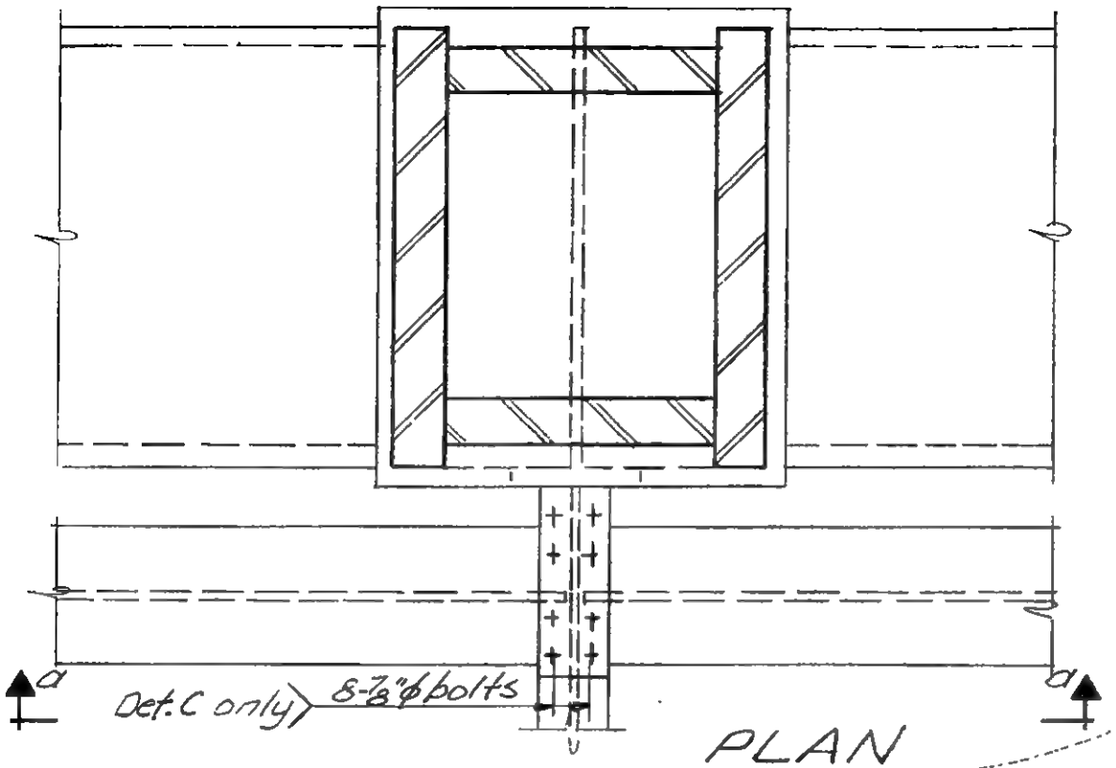

PLAN

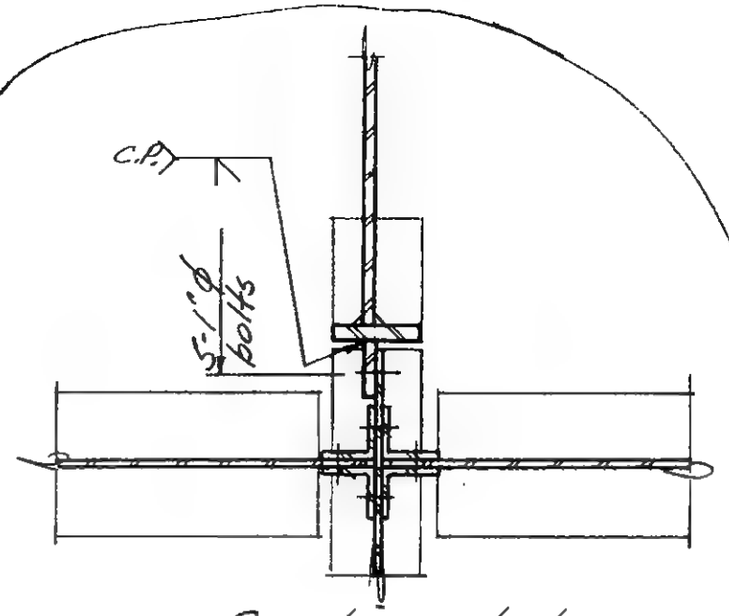

Section b-b

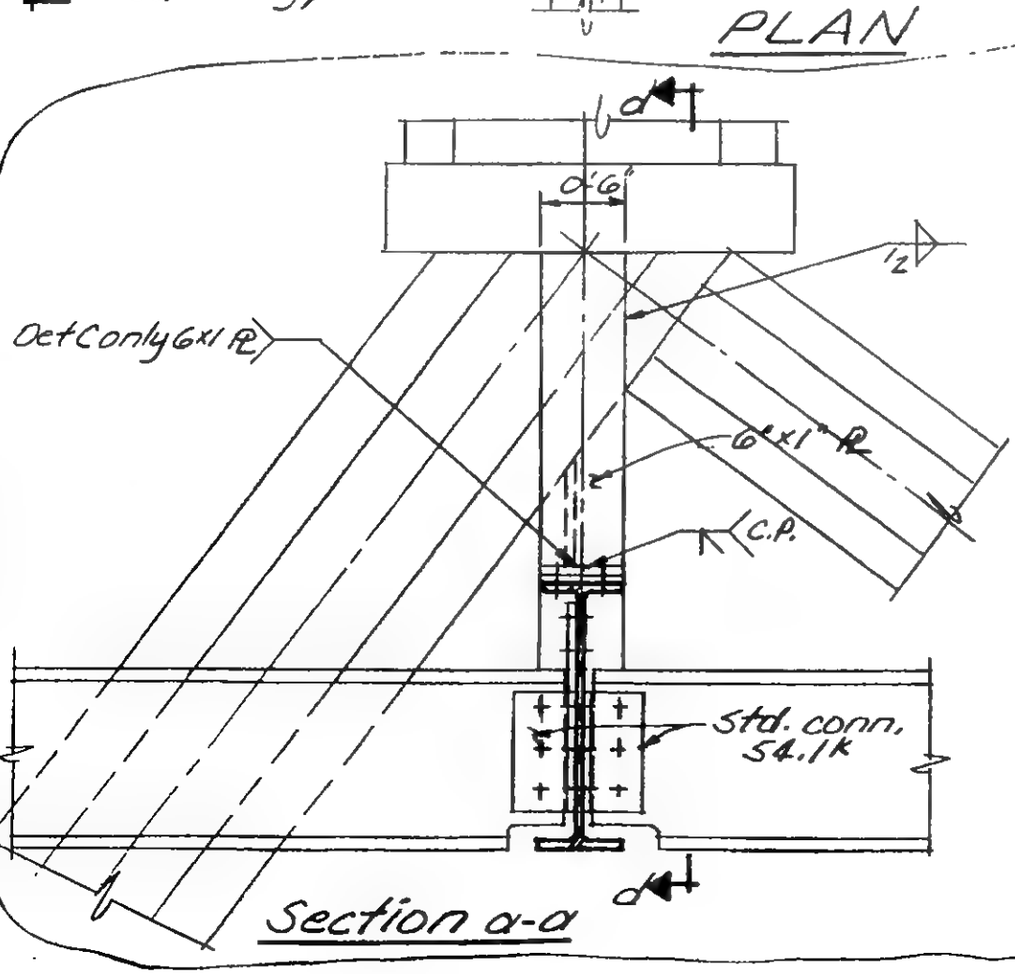

Section a-a

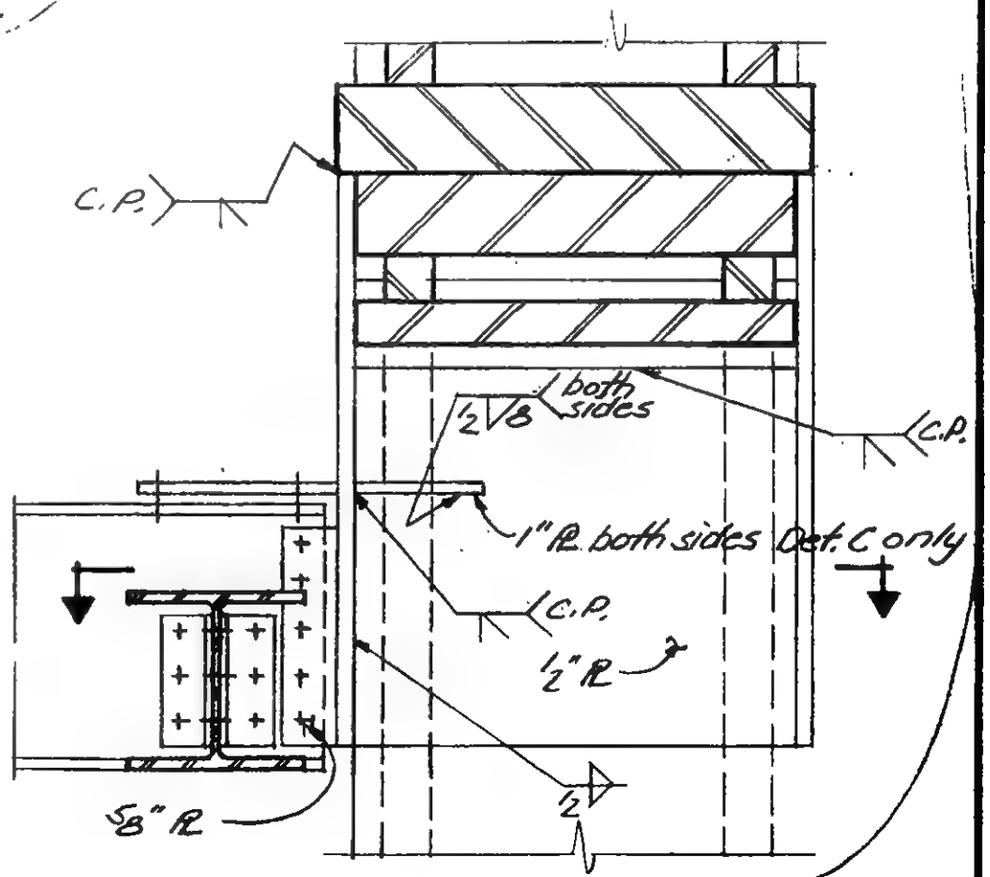

Section d-d

LICENSED PROFESSIONAL ENGINEER — LESLIE E. ROBERTSON — No. 34360 — UNIVERSITY OF THE STATE OF NEW YORK

DESIGNED

DRAWN

REVIEWED

6-AB1-198

SKILLING, HELLE, CHRISTIANSEN, ROBERTSON — Structural & Civil Engineers

PROJECT THE WORLD TRADE CENTER | TITLE CONNECTION DETAIL 3918 | DATE 2-9-68

REVISIONS

7-17-68

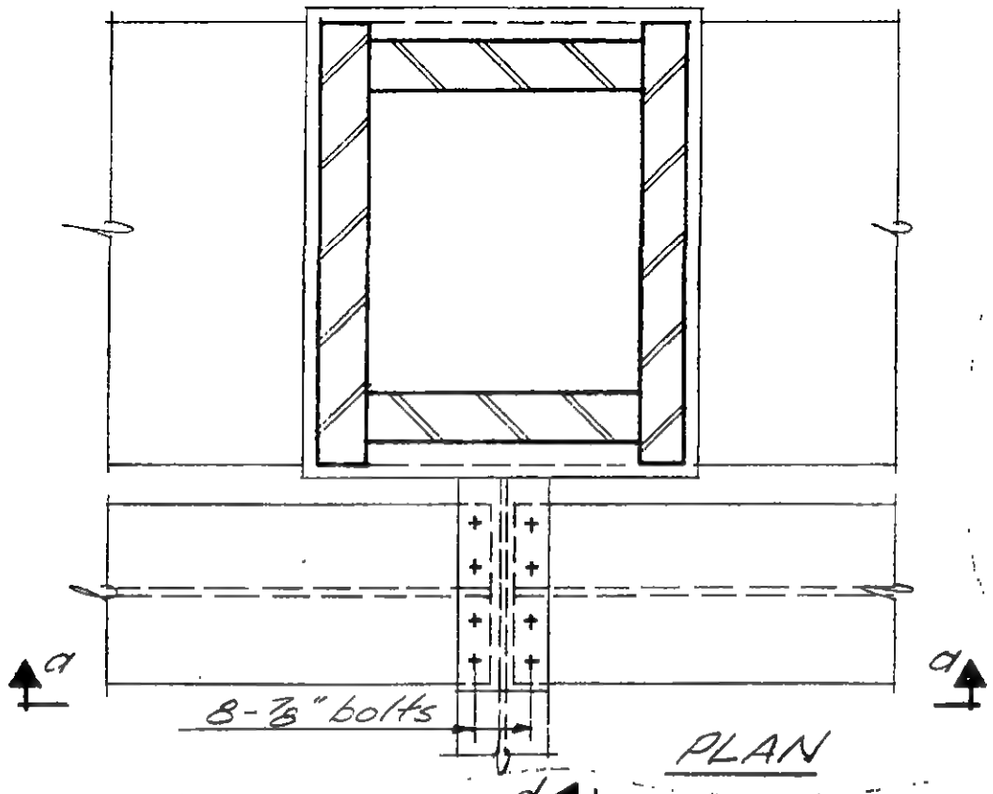

PLAN

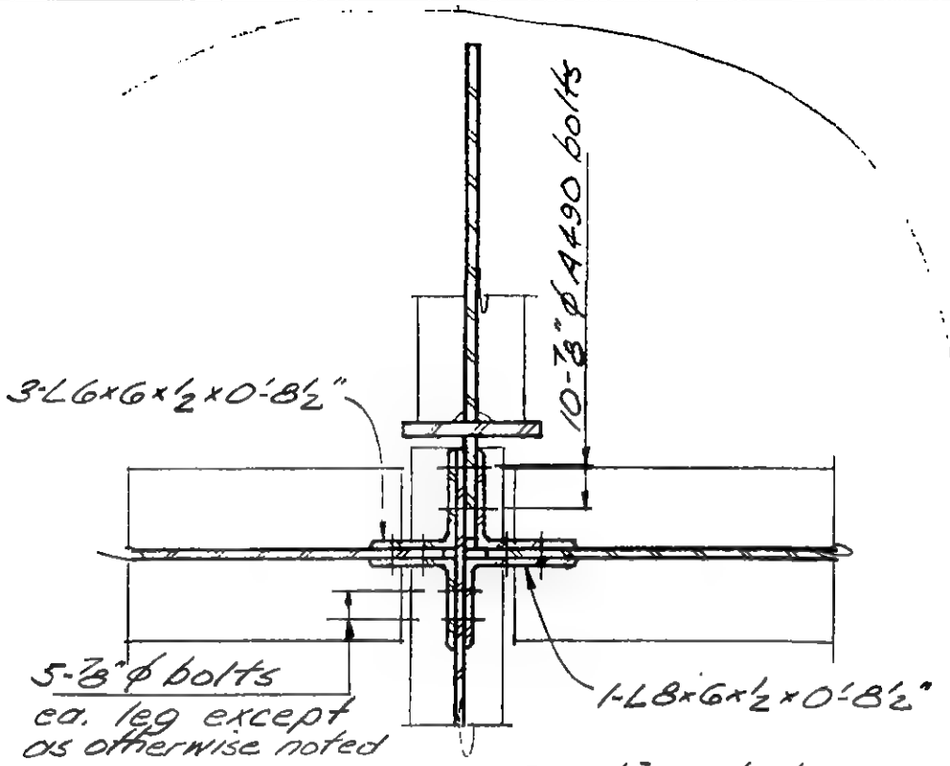

Section b-b

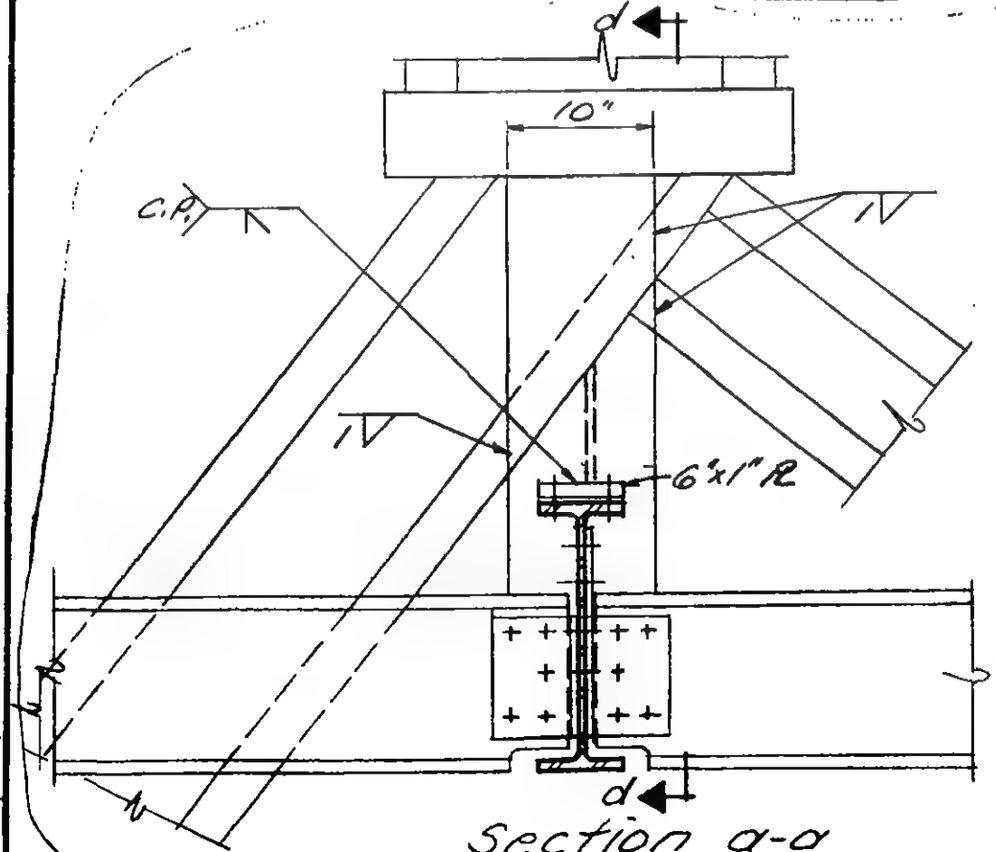

Section a-a

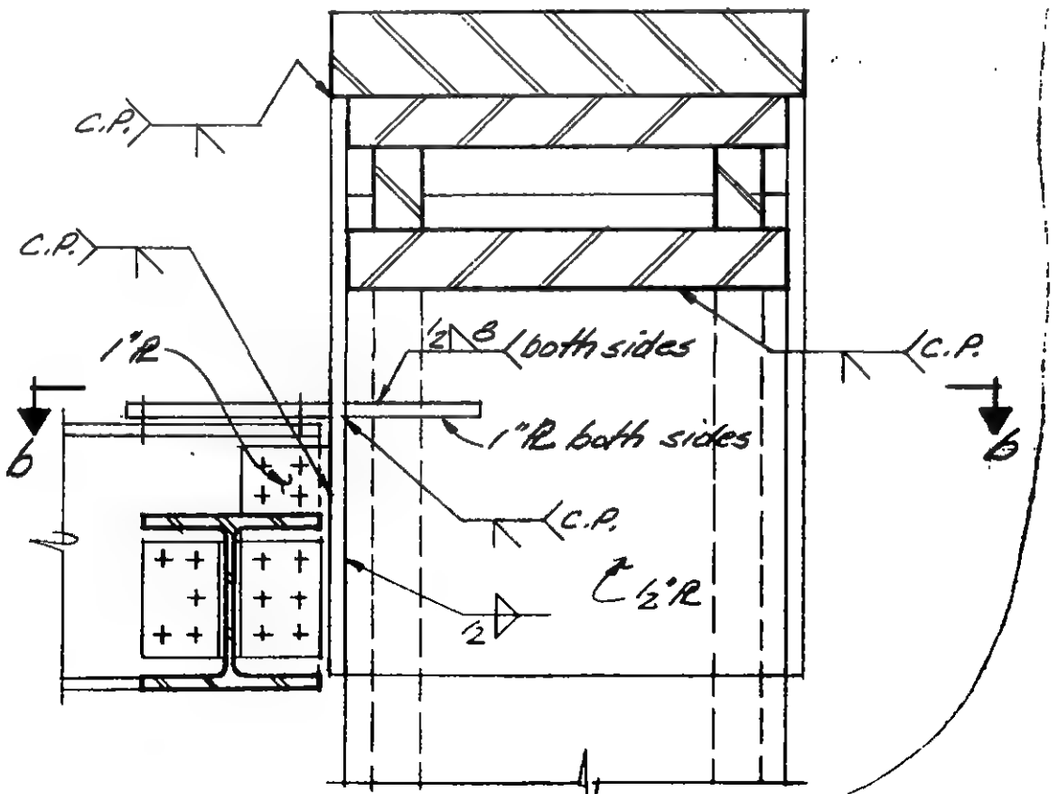

Section d-d

DESIGNED

DRAWN

REVIEWED

LICENSED PROFESSIONAL ENGINEER
LESLIE E. ROBERTSON
No. 24360
STATE OF NEW YORK

6-AB1-198.1

SKILLING - HELLE - CHRISTIANSEN - ROBERTSON Structural & Civil Engineers

PROJECT THE WORLD TRADE CENTER | TITLE CONNECTION DETAIL 3910 | DATE 2-9-68

REVISIONS

7-17-68

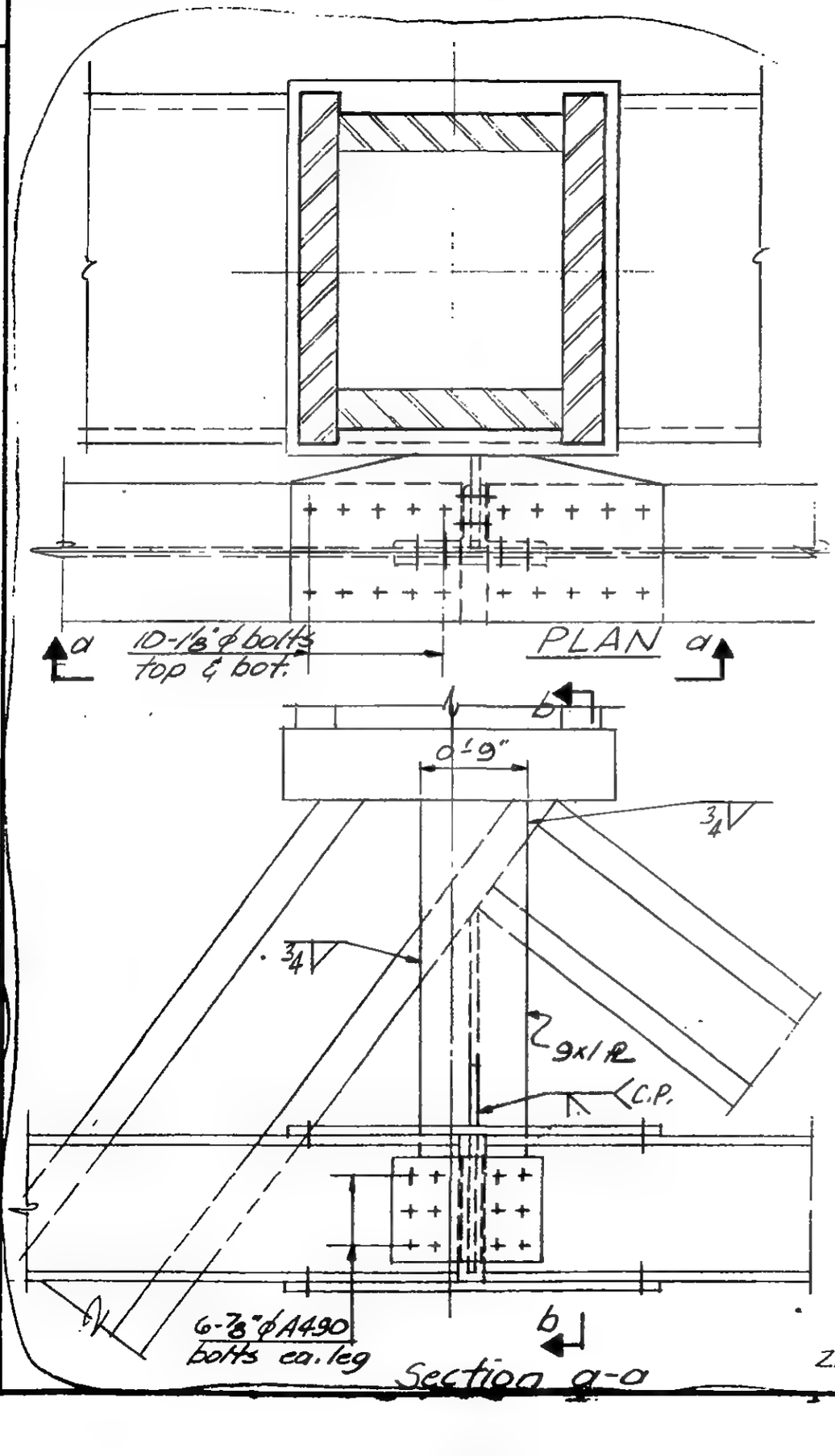

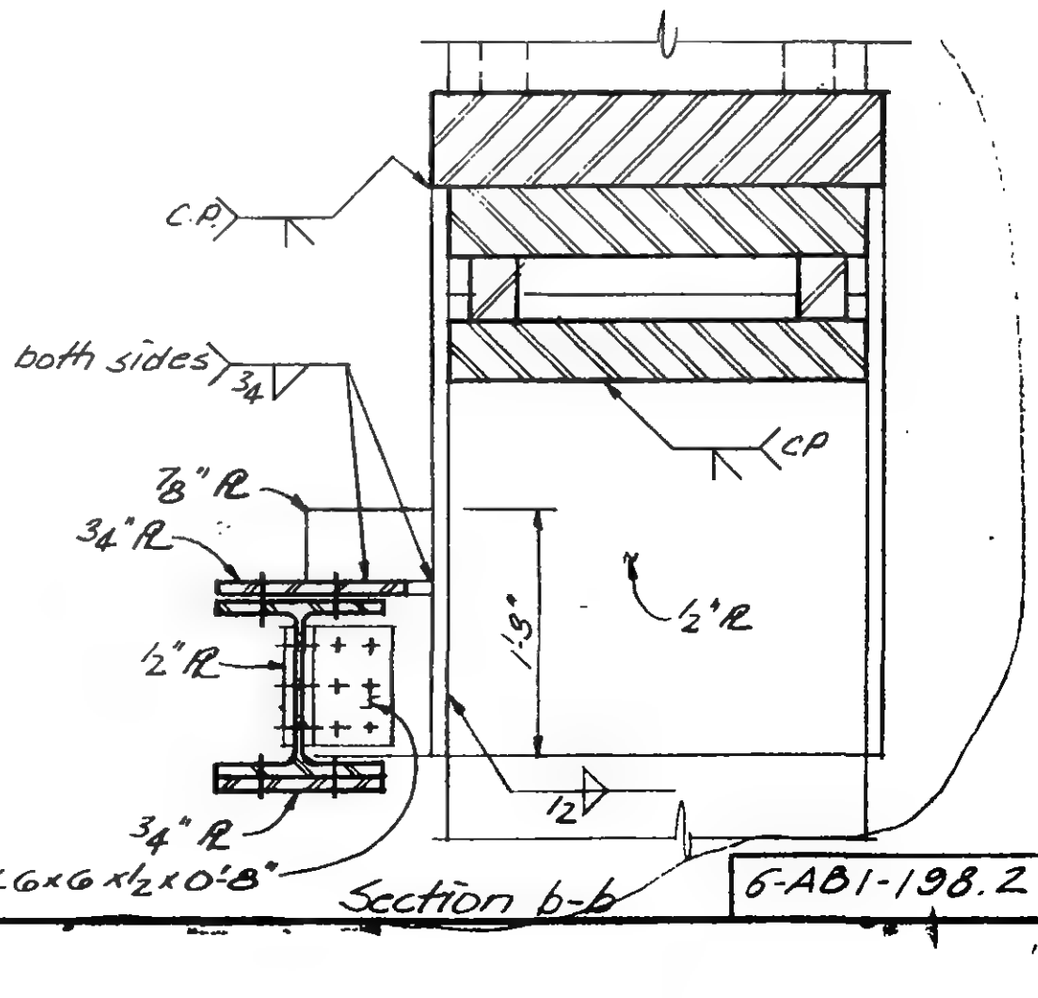

6-AB1-198.2

LICENSED PROFESSIONAL ENGINEER
LESLIE E. ROBERTSON
No. 34360
UNIVERSITY OF THE STATE OF NEW YORK

SKILLING - HELLE - CHRISTIANSEN - ROBERTSON Structural & Civil Engineers

PROJECT THE WORLD TRADE CENTER | TITLE CONNECTION DETAIL 391E | DATE 2-9-68

REVISIONS

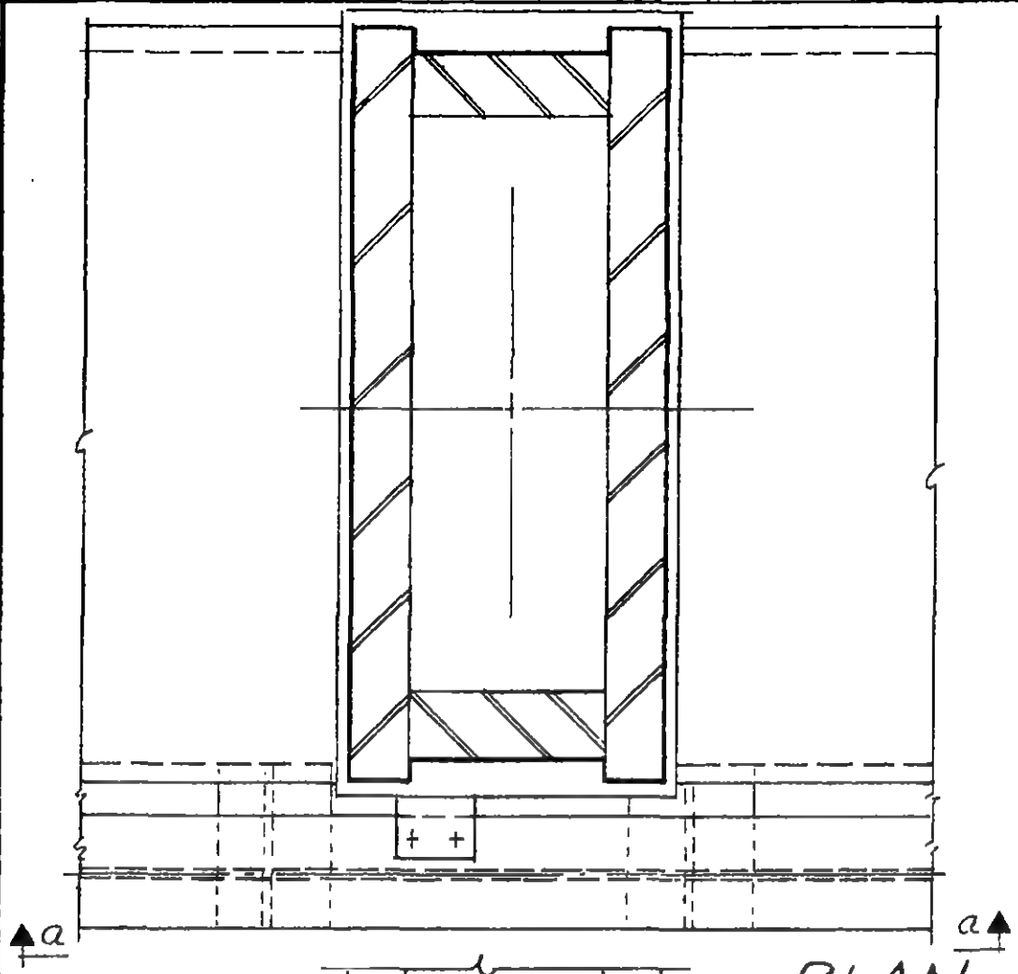

PLAN

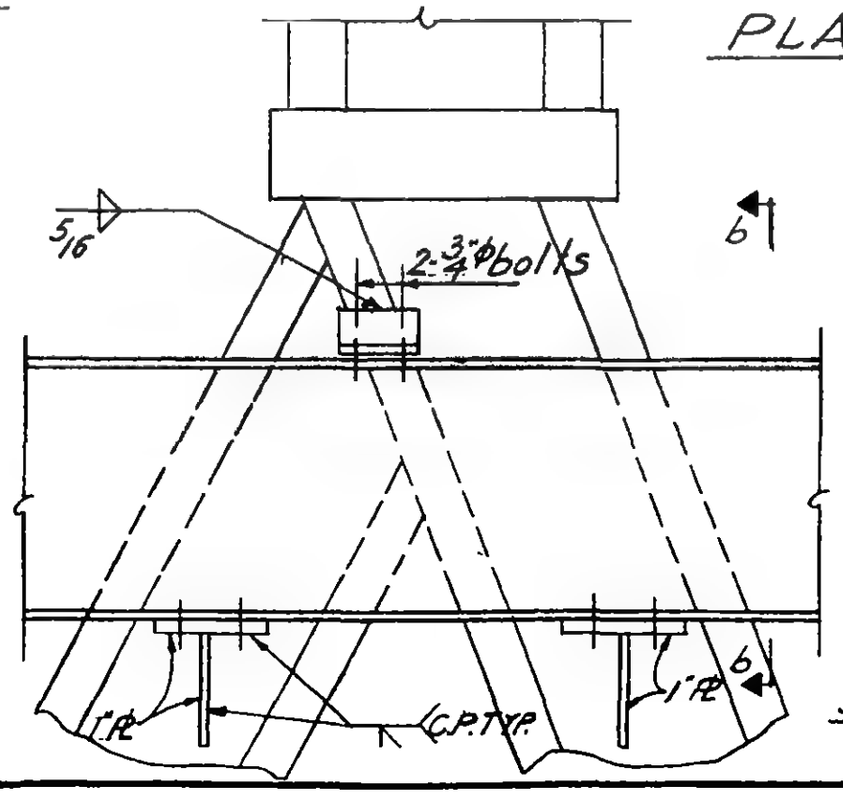

Section a-a

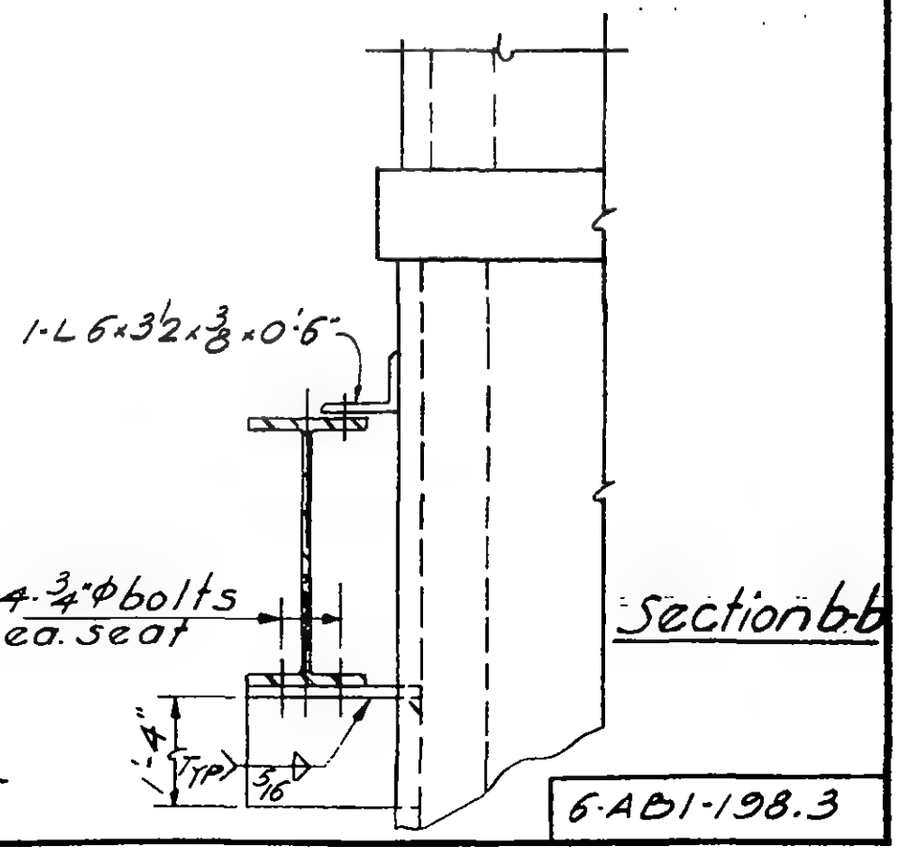

Section b-b

6-AB1-198.3

LICENSED PROFESSIONAL ENGINEER
LESLIE E. ROBERTSON
No. 34360
UNIVERSITY OF THE STATE OF NEW YORK

SKILLING - HELLE - CHRISTIANSEN - ROBERTSON Structural & Civil Engineers

PROJECT THE WORLD TRADE CENTER | TITLE CONNECTION DETAIL 391 F, G | DATE 2-9-68

REVISIONS

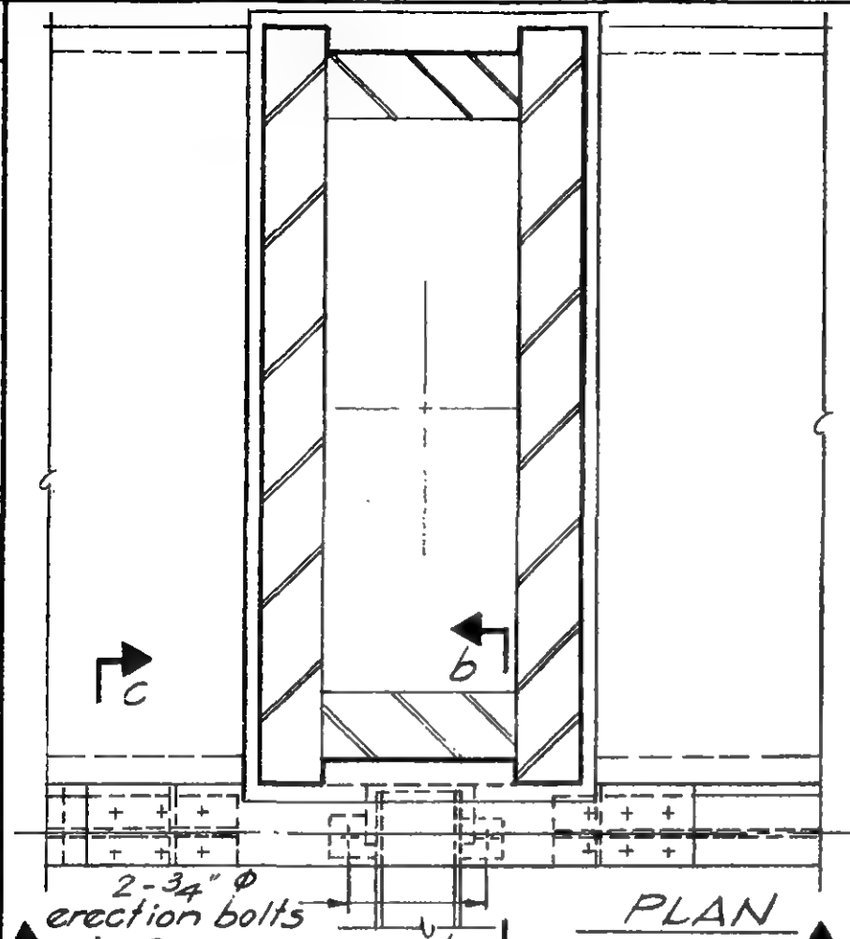

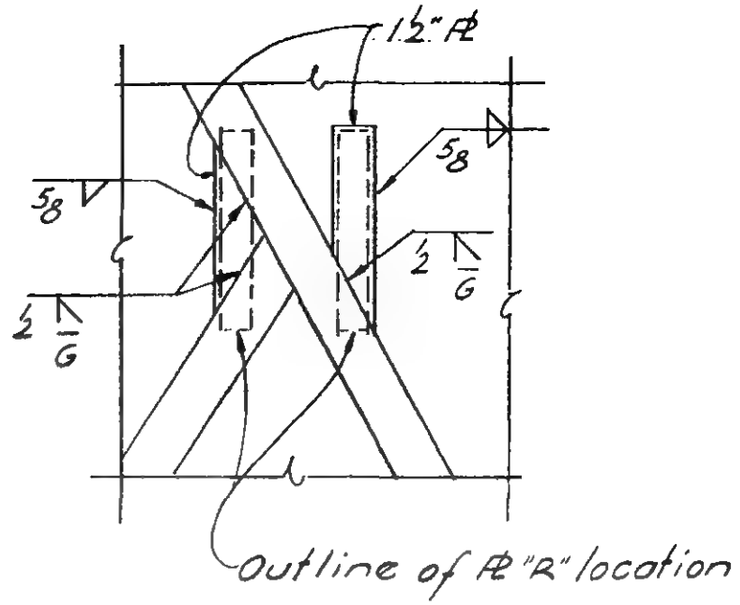

	Plate "R"	bolts "k"	Weld ①
Det. F	4 x 5/8 x 1'-2"	6 - 3/4" ϕ	5/8
Det. G	4 x 3/4 x 1'-2"	6 - 1" ϕ	3/4

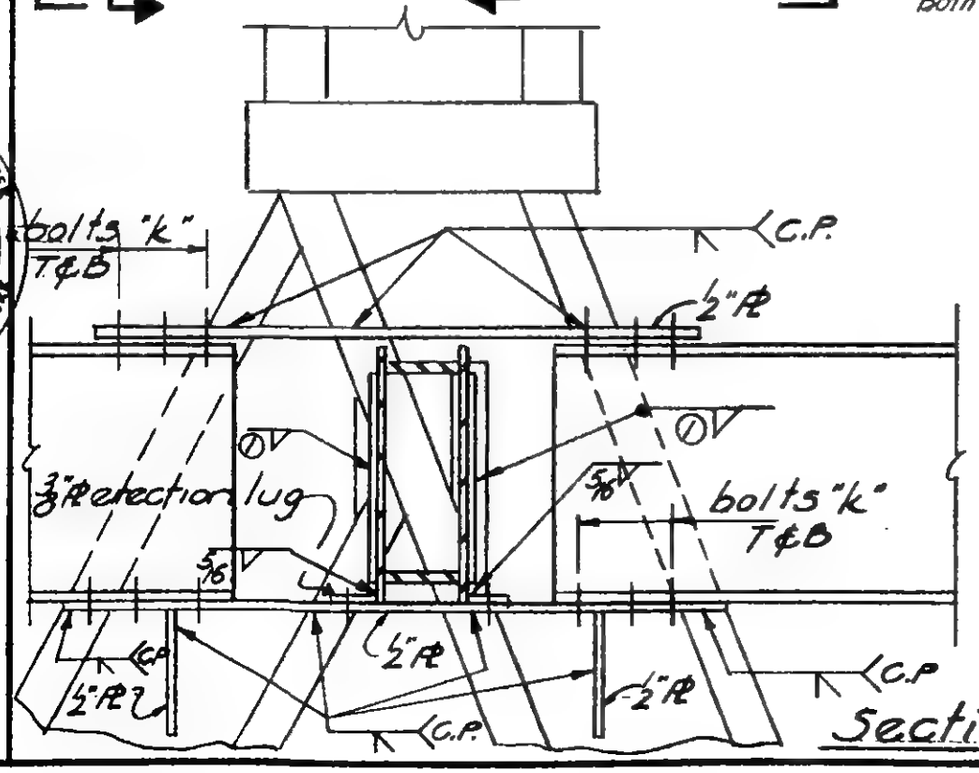

Section a-a

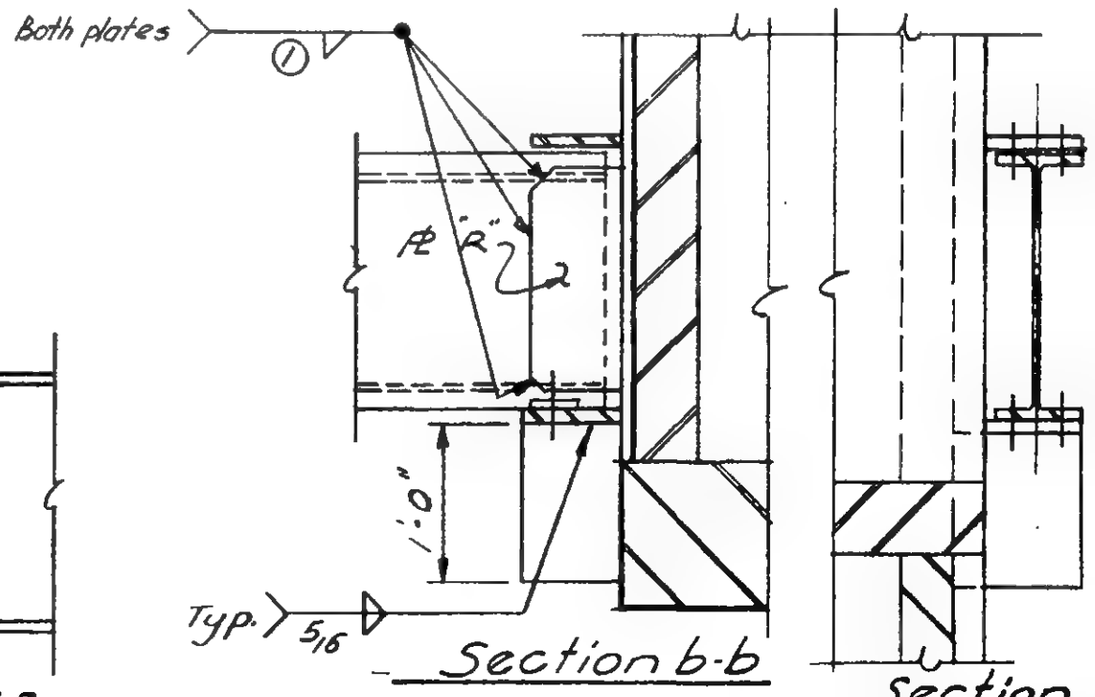

Section b-b

Section c-c

LICENSED PROFESSIONAL ENGINEER LESLIE E. ROBERTSON No. 34360 UNIVERSITY OF THE STATE OF NEW YORK

6-ABI-198.4

SKILLING - HELLE - CHRISTIANSEN - ROBERTSON Structural & Civil Engineers

PROJECT THE WORLD TRADE CENTER | TITLE CONNECTION DETAILS 392A & 392B | DATE 9-15-67

REVISIONS

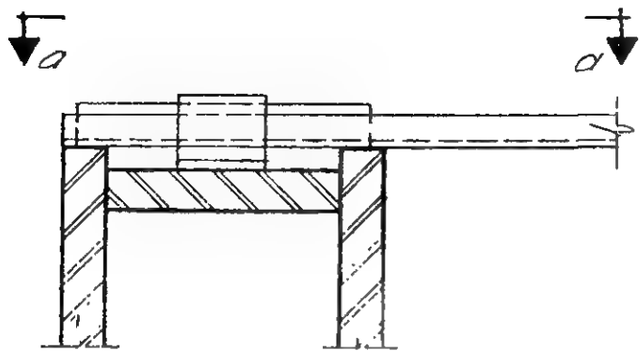

Plan
Detail 392A

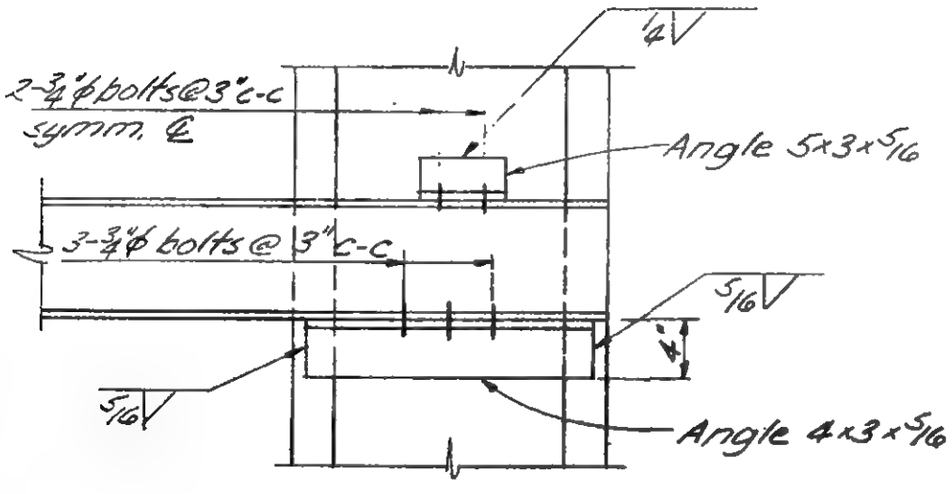

Section a-a

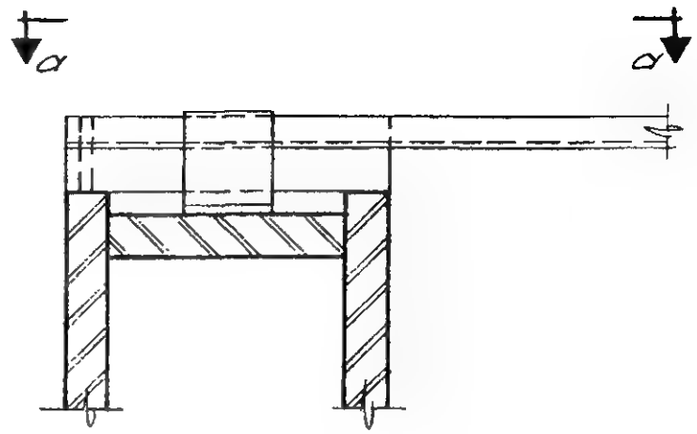

Plan
Detail 392B

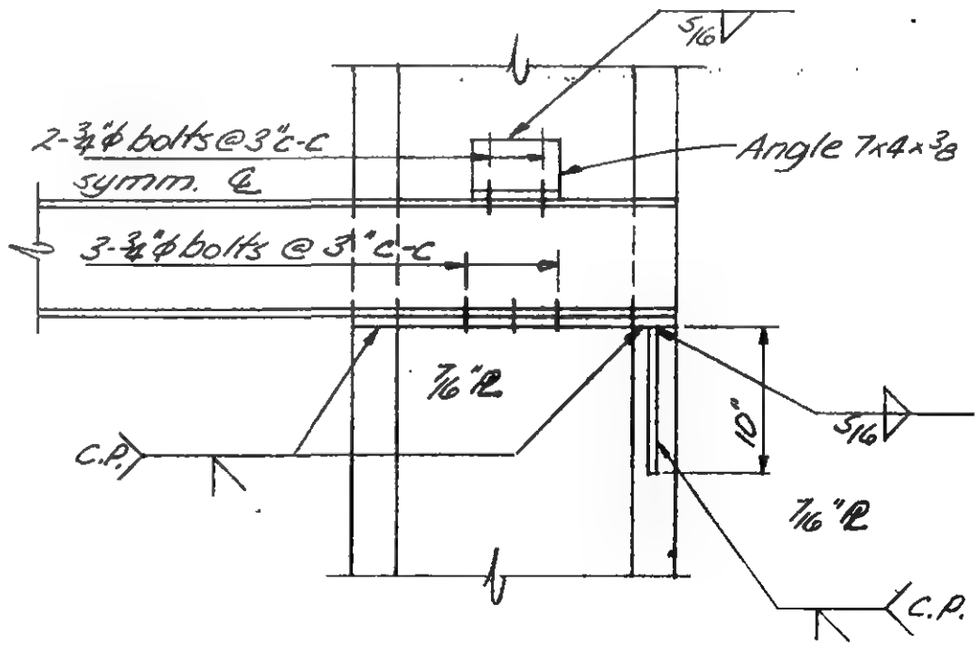

Section a-a

6-AB1-199

SKILLING - HELLE - CHRISTIANSEN - ROBERTSON Structural & Civil Engineers

PROJECT THE WORLD TRADE CENTER | TITLE CONNECTION DETAIL 393 A, B | DATE 9-15-67

REVISIONS

11-10-67

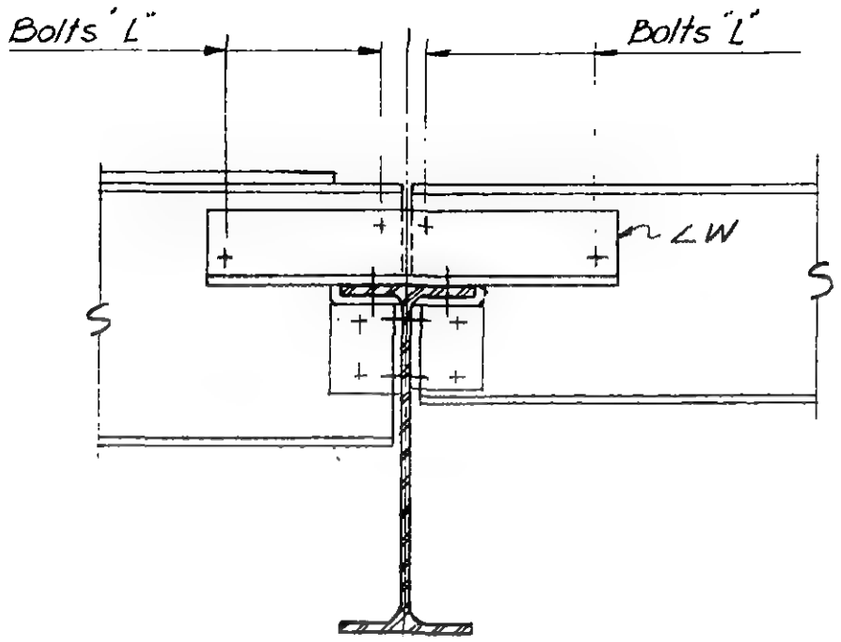

Section C-C

Detail 393 A only

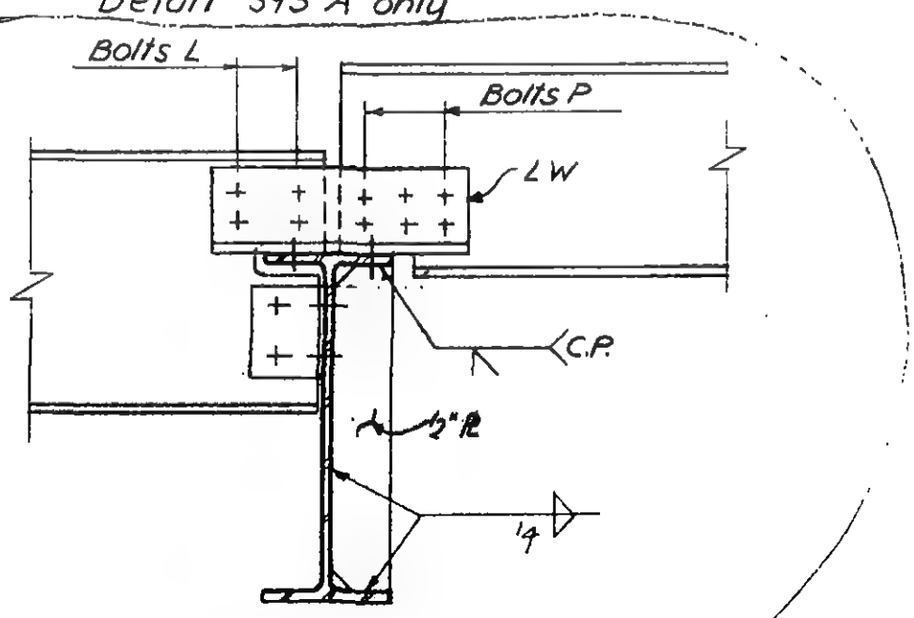

Section C-C

Detail 393B only

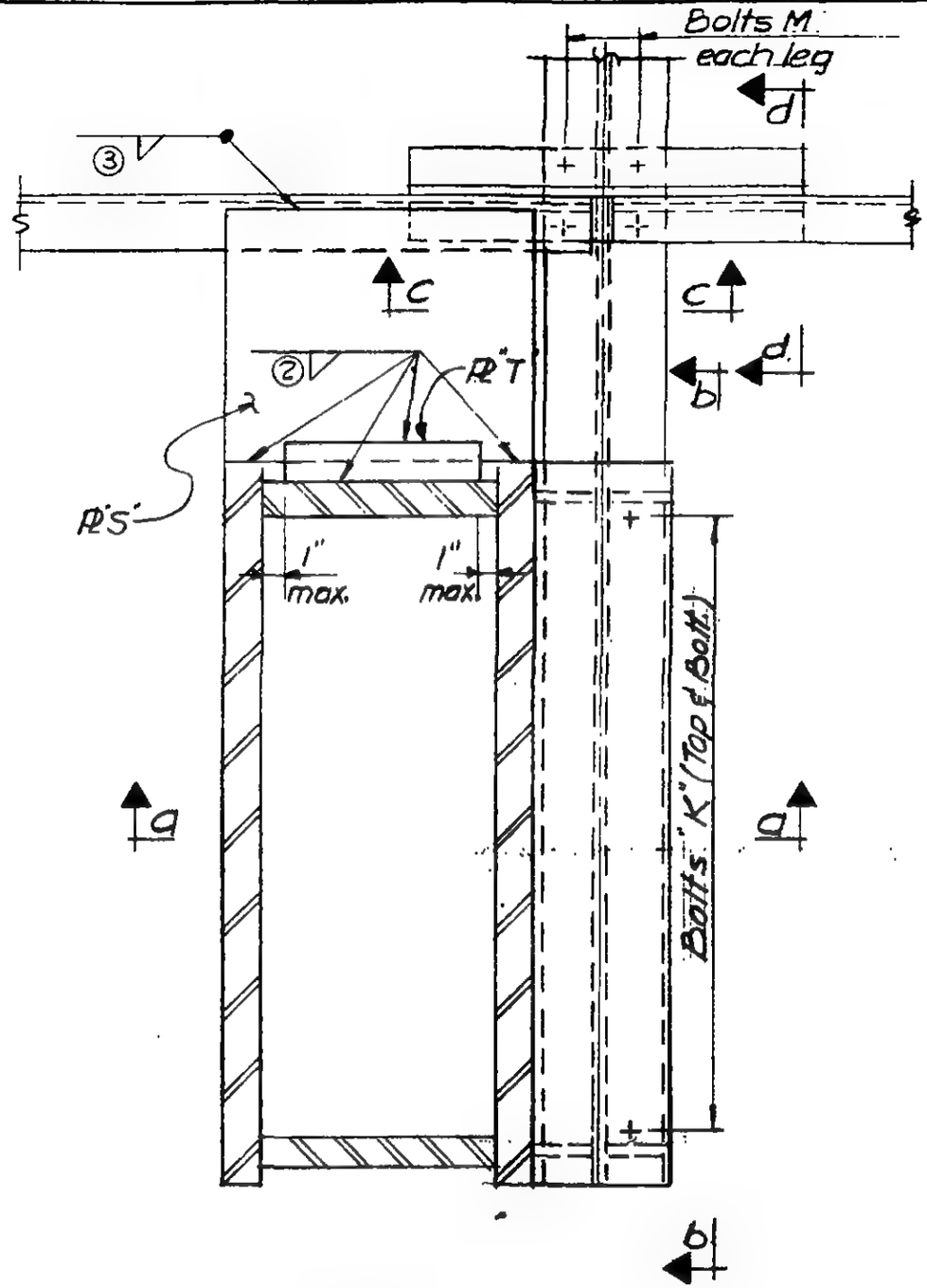

Plan

FOR SECTION a-a & b-b SEE DWG. 6-AB1-200.1

LICENSED PROFESSIONAL ENGINEER LESLIE E. ROBERTSON No. 34360 UNIVERSITY OF THE STATE OF NEW YORK

6-AB1-200

SKILLING - HELLE - CHRISTIANSEN - ROBERTSON Structural & Civil Engineers

PROJECT THE WORLD TRADE CENTER | TITLE CONNECTION DETAIL 393, A, B | DATE 9-15-67

REVISIONS

11-10-67

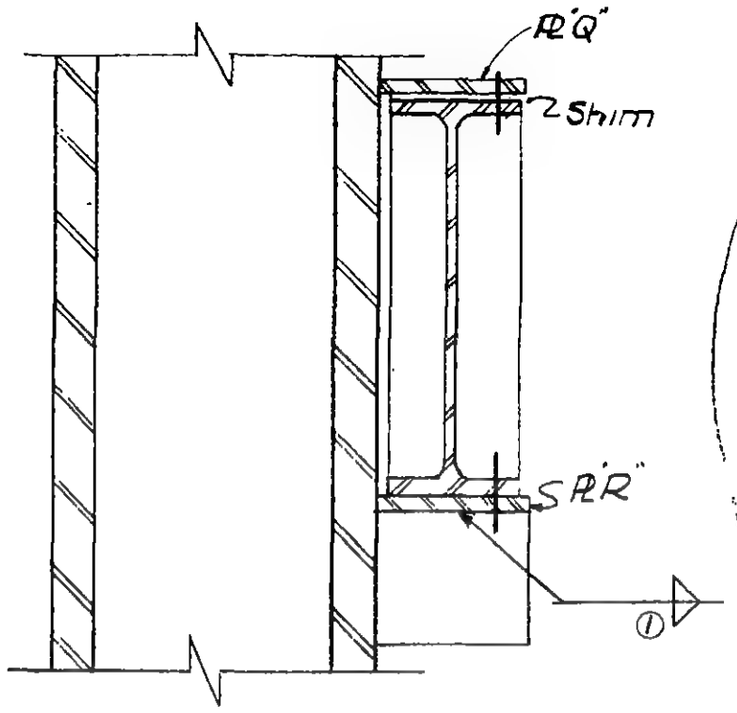

Section a-a

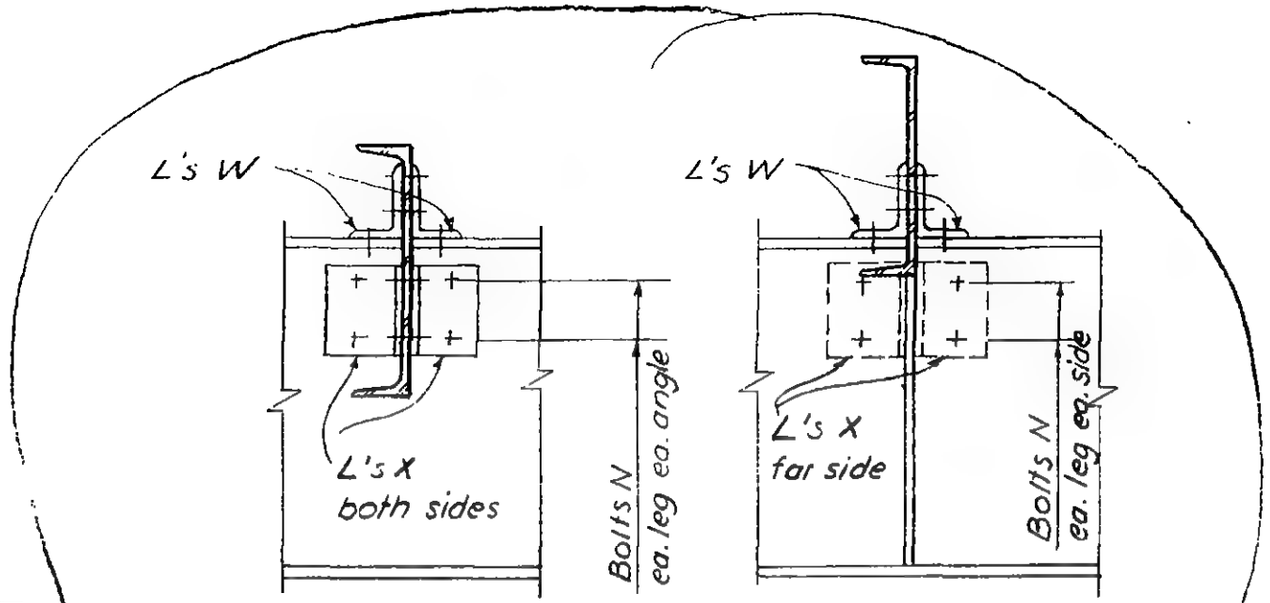

Section d-d
Detail 393 A only

Section d-d
Detail 393 B only

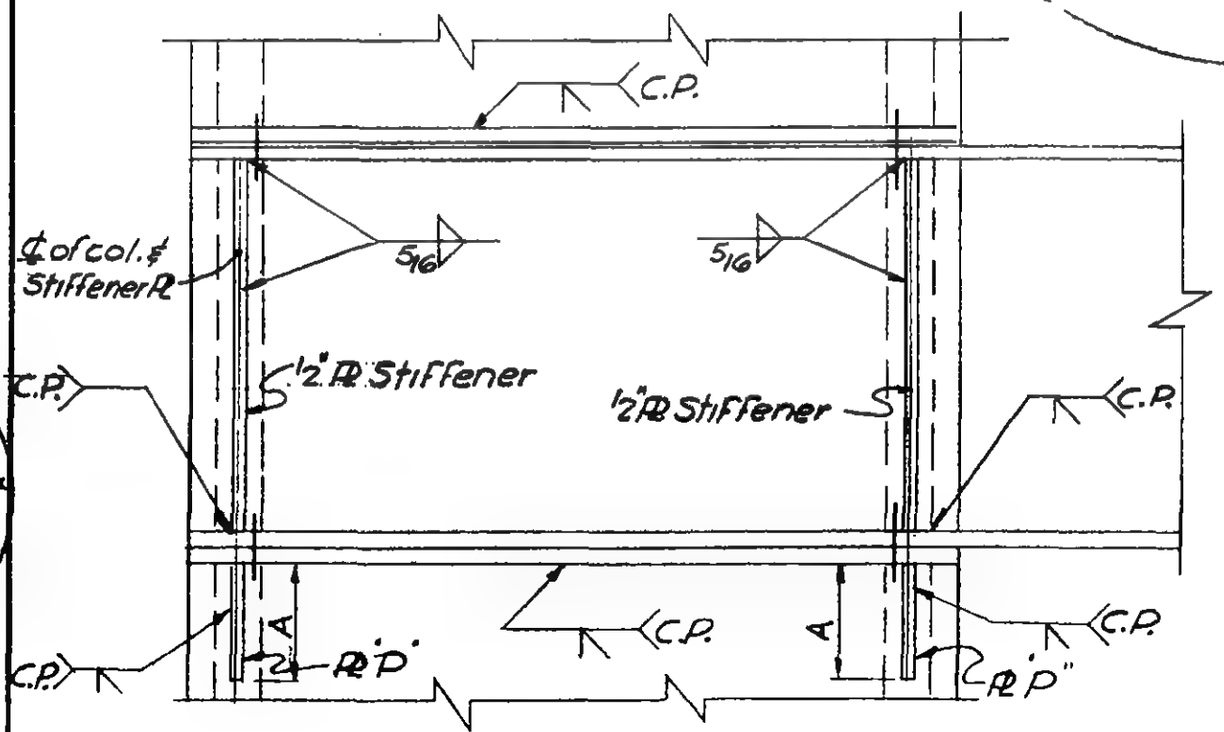

Section b-b

LICENSED PROFESSIONAL ENGINEER
LESLIE E. ROBERTSON
No. 34360
UNIVERSITY OF THE STATE OF NEW YORK

G-ABI-200.1

SKILLING - HELLE - CHRISTIANSEN - ROBERTSON Structural & Civil Engineers

PROJECT THE WORLD TRADE CENTER | TITLE SCHEDULE FOR DETAIL 393A,B | DATE 9-15-67

REVISIONS

11-10-67

	393 A	393 B
PLATES		
P	7/8"	7/8"
Q	3/4"	3/4"
R	3/4"	3/4"
S	7/8"	7/8"
T	4" x 7/8"	4" x 7/8"
DIMENSIONS		
A	1'-6"	1'-6"
BOLTS		
K	17 - 1" ϕ	17 - 1" ϕ
L	4 - 7/8" ϕ	4 - 7/8" ϕ
M	2 - 3/4" ϕ	2 - 3/4" ϕ
N	2 - 1" ϕ	2 - 1" ϕ
P	—	6 - 1" ϕ
WELDS		
①	5/16	5/16
②	3/4	3/4
③	5/16	5/16
ANGLES		
W	4 x 3 1/2 x 7/16	7 x 4 x 1/2
X	4 x 3 1/2 x 7/16	4 x 3 1/2 x 7/16

LICENSED PROFESSIONAL ENGINEER LESLIE E. ROBERTSON STATE OF NEW YORK UNIVERSITY OF THE STATE OF NEW YORK

6-ABI-200.2

SKILLING - HELLE - CHRISTIANSEN - ROBERTSON Structural & Civil Engineers

PROJECT THE WORLD TRADE CENTER | TITLE SPLICE CONNECTION 395 A, B, C | DATE 9-15-67

REVISIONS

11-10-67

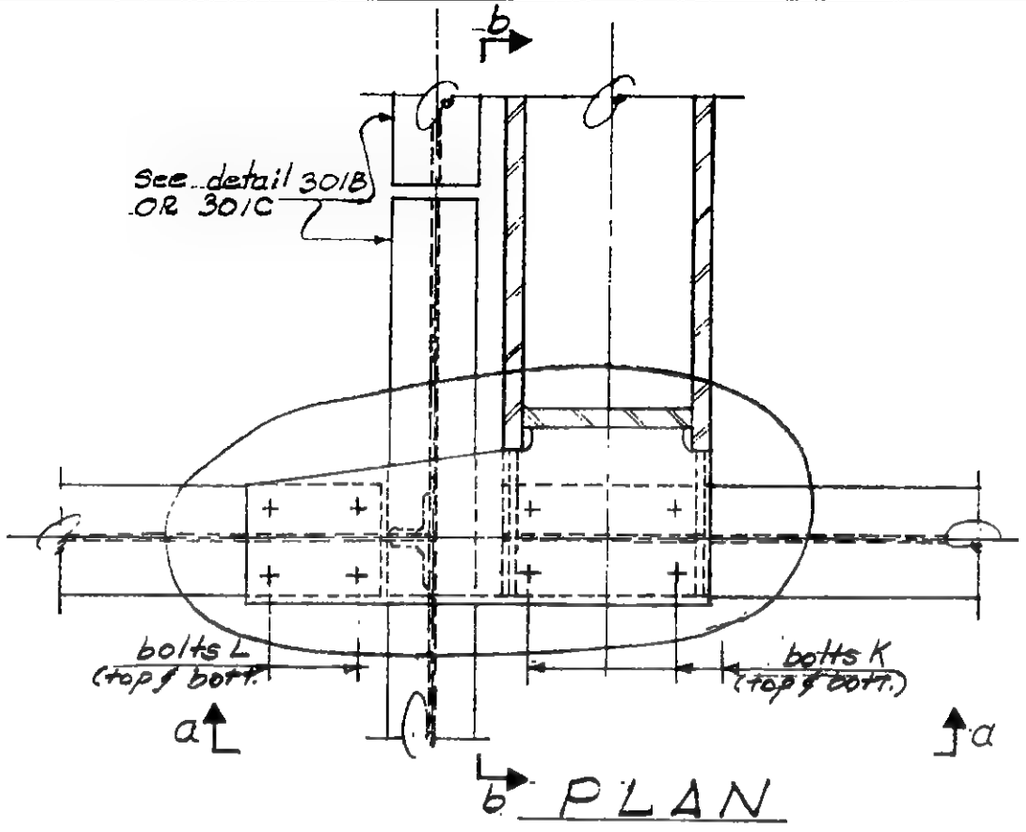

b PLAN

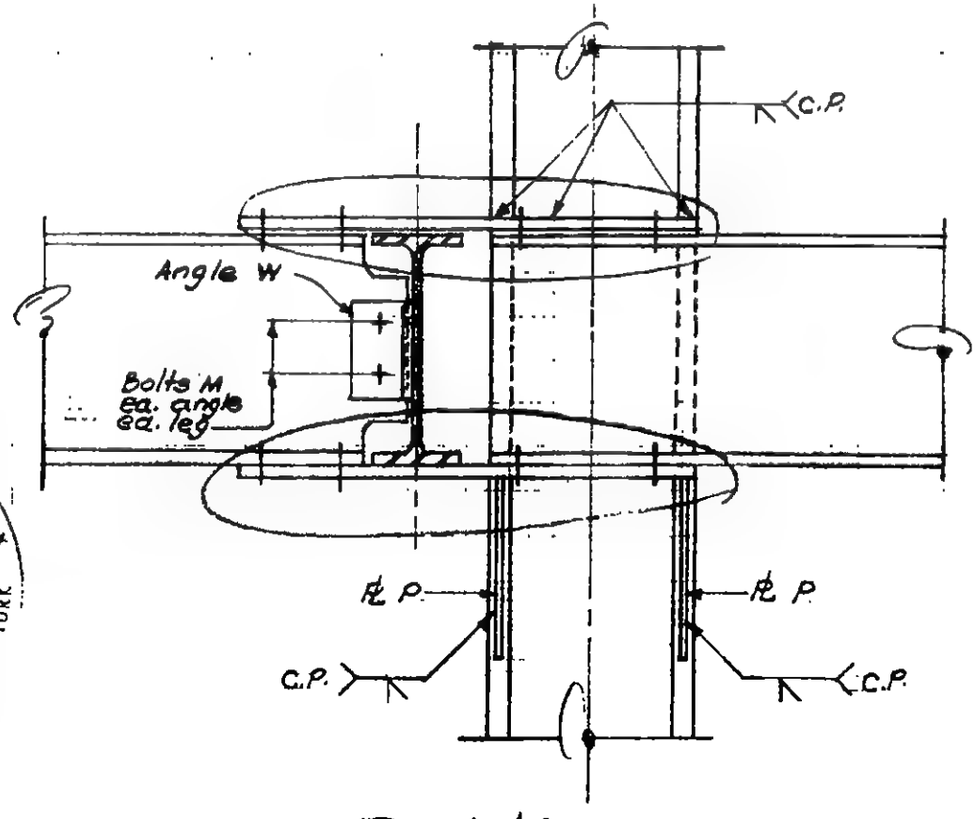

Section a-a

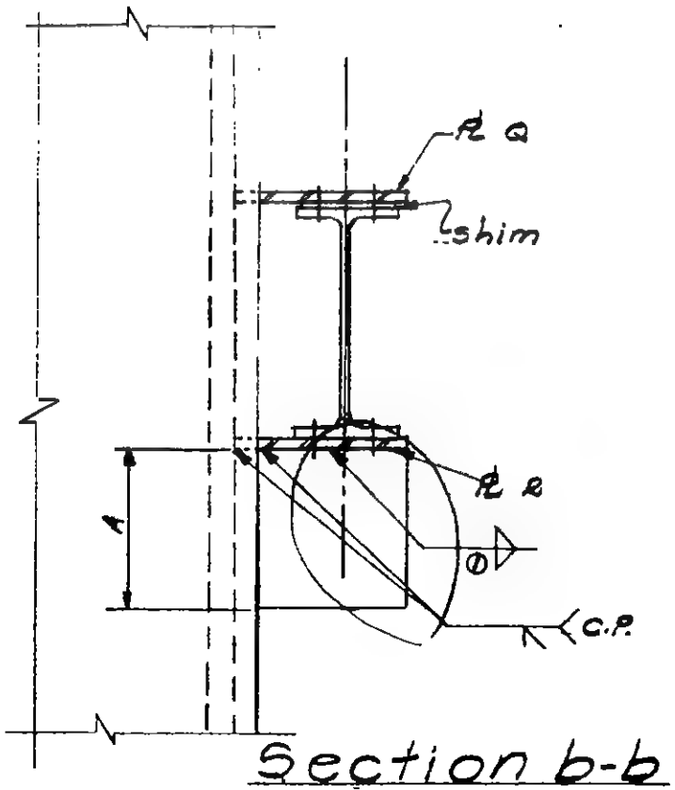

Section b-b

LICENSED PROFESSIONAL ENGINEER
LESLIE E. ROBERTSON
No. 34360
UNIVERSITY OF THE STATE OF NEW YORK

G-AB1-202

SKILLING - HELLE - CHRISTIANSEN - ROBERTSON Structural & Civil Engineers

PROJECT THE WORLD TRADE CENTER | TITLE SCHEDULE FOR DETAIL 395 A, B, C | DATE 9-15-67

REVISIONS

11-10-67

	395A	395B	395C
PLATES			
P	½"	½"	⅝"
Q	½"	½"	⅝"
R	½"	½"	⅝"
ANGLES			
W	4 × 3½ × 5/16	4 × 3½ × 5/16	4 × 3½ × 5/16
BOLTS			
K	6 - ¾" ϕ	6 - ¾" ϕ	6 - ¾" ϕ
L	4 - ¾" ϕ	6 - ¾" ϕ	6 - ¾" ϕ
M	2 - ¾" ϕ	3 - ¾" ϕ	3 - ¾" ϕ
DIMENSIONS			
A	1'-0"	1'-0"	1'-2"
WELDS			
(1)	⅜	⅜	⅜"

LICENSED PROFESSIONAL ENGINEER
LESLIE E. ROBERTSON
No. 34360
UNIVERSITY OF THE STATE OF NEW YORK

6-AB1-202.1

SKILLING - HELLE - CHRISTIANSEN - ROBERTSON Structural & Civil Engineers

PROJECT THE WORLD TRADE CENTER | TITLE CONNECTION DETAIL 395D | DATE 2-9-68

REVISIONS

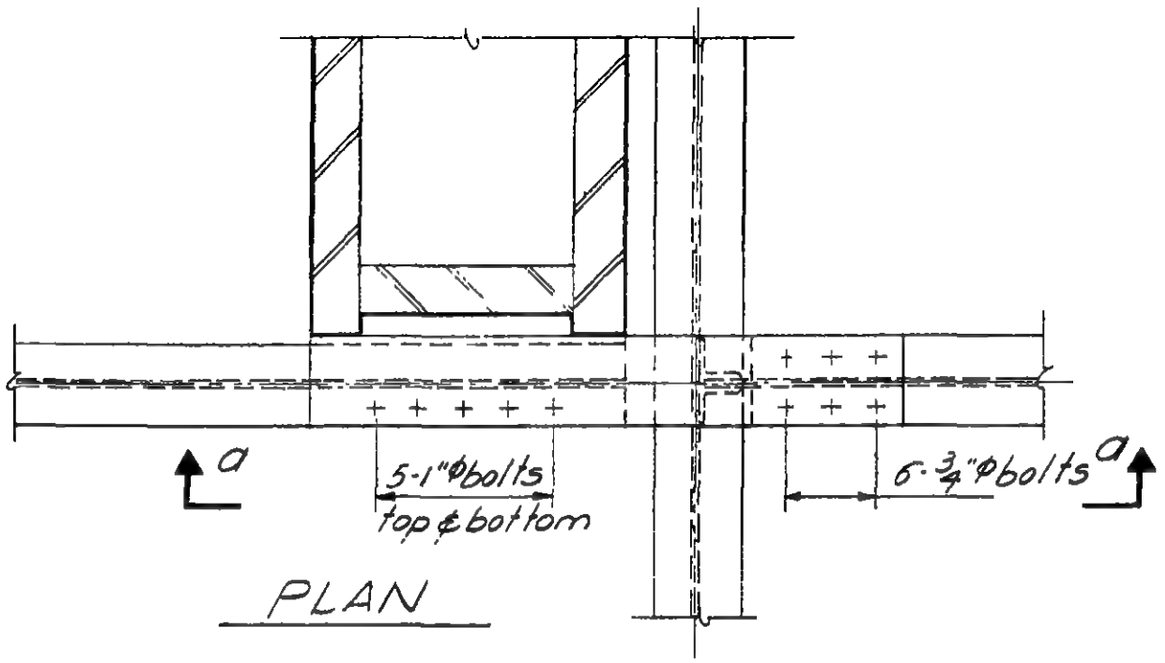

PLAN

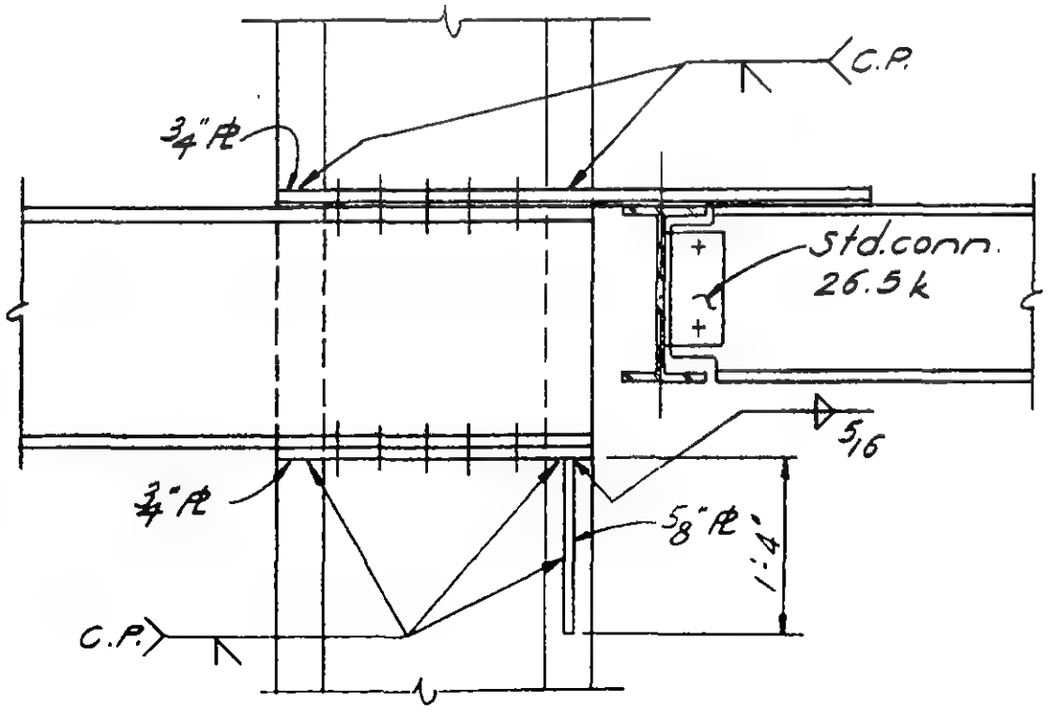

Section a-a

LICENSED PROFESSIONAL ENGINEER
LESLIE E. ROBERTSON
No. 34360
UNIVERSITY OF THE STATE OF NEW YORK

6-AB1-202.2

SKILLING - HELLE - CHRISTIANSEN - ROBERTSON Structural & Civil Engineers

PROJECT THE WORLD TRADE CENTER | TITLE CONNECTION DETAIL 395E | DATE 1-24-68

REVISIONS

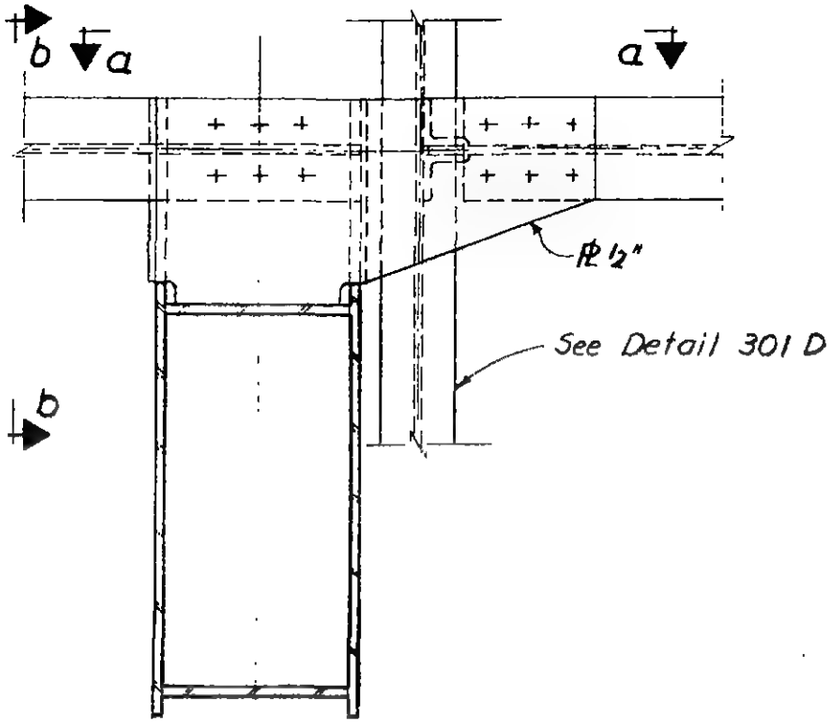

Plan

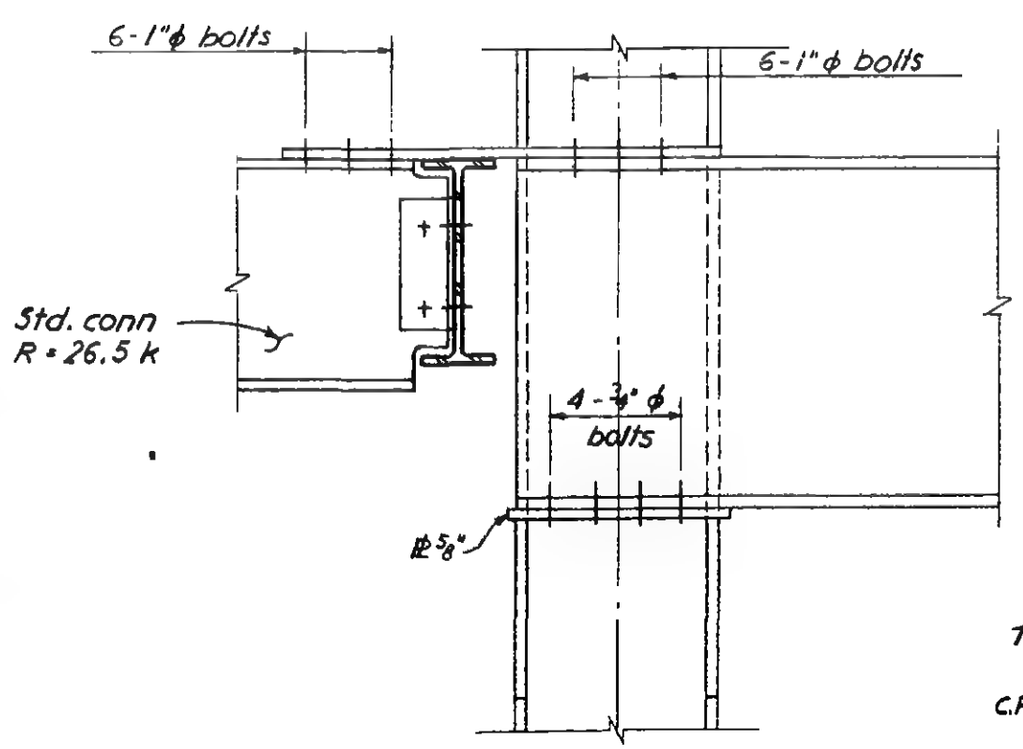

Section a-a

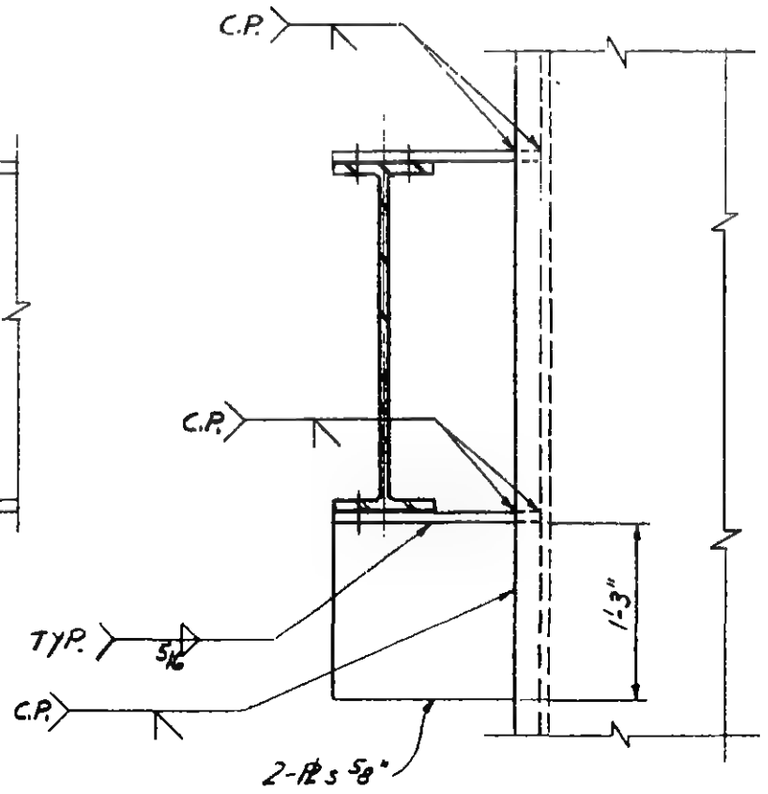

Section b-b

LICENSED PROFESSIONAL ENGINEER
LESLIE E. ROBERTSON
No. 34360
UNIVERSITY OF THE STATE OF NEW YORK

6-AB1-202.3

SKILLING - HELLE - CHRISTIANSEN - ROBERTSON Structural & Civil Engineers

PROJECT THE WORLD TRADE CENTER | TITLE CONNECTION DETAIL 396A | DATE 9-29-67

REVISIONS

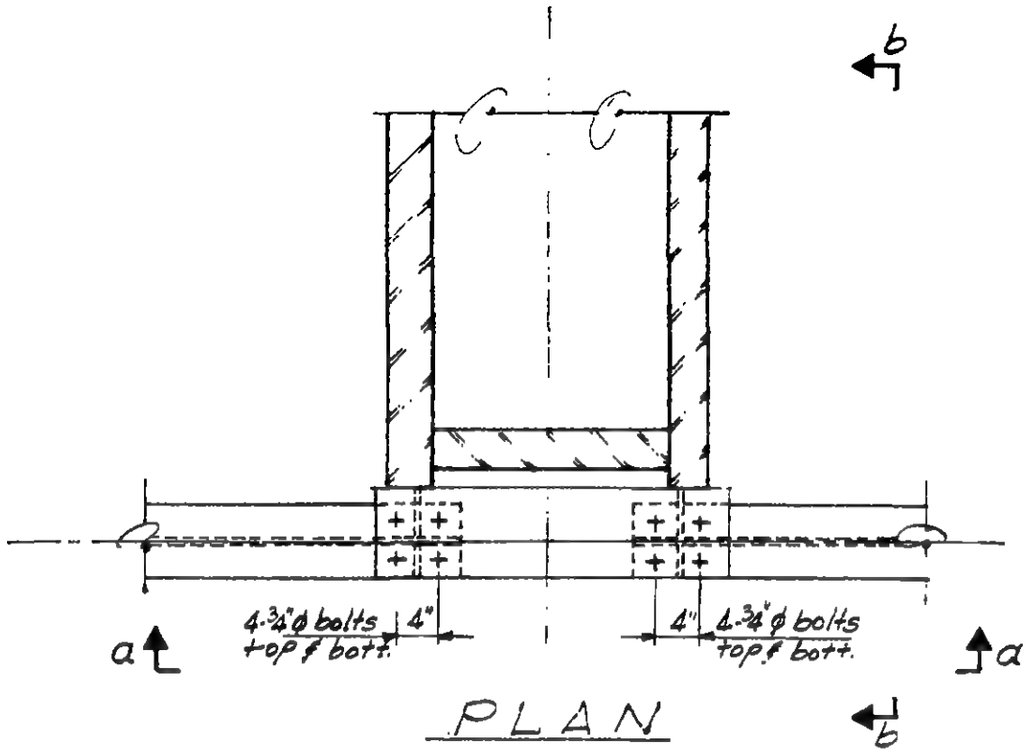

PLAN

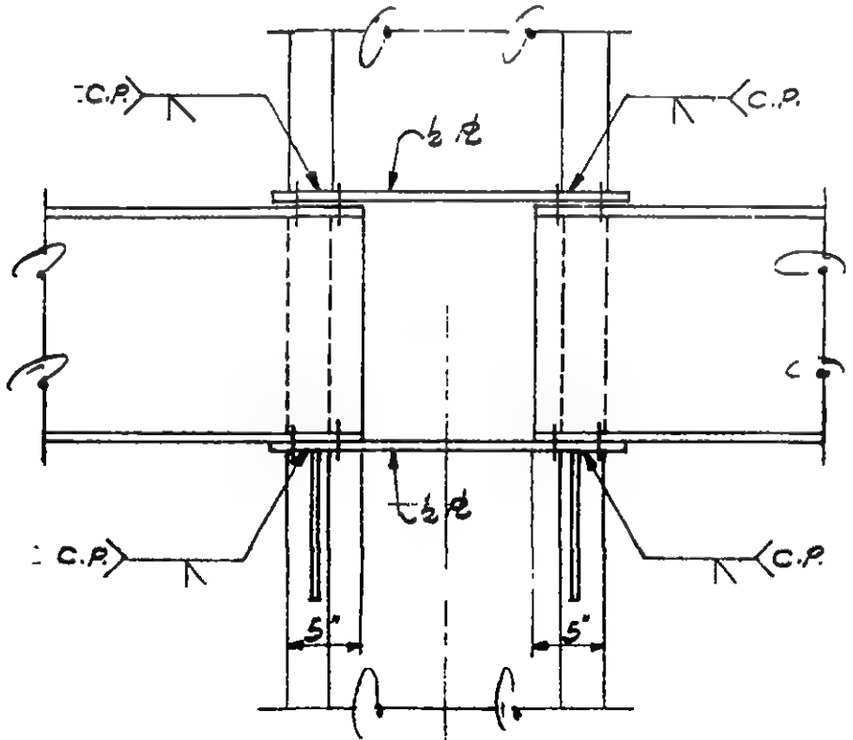

Section a-a

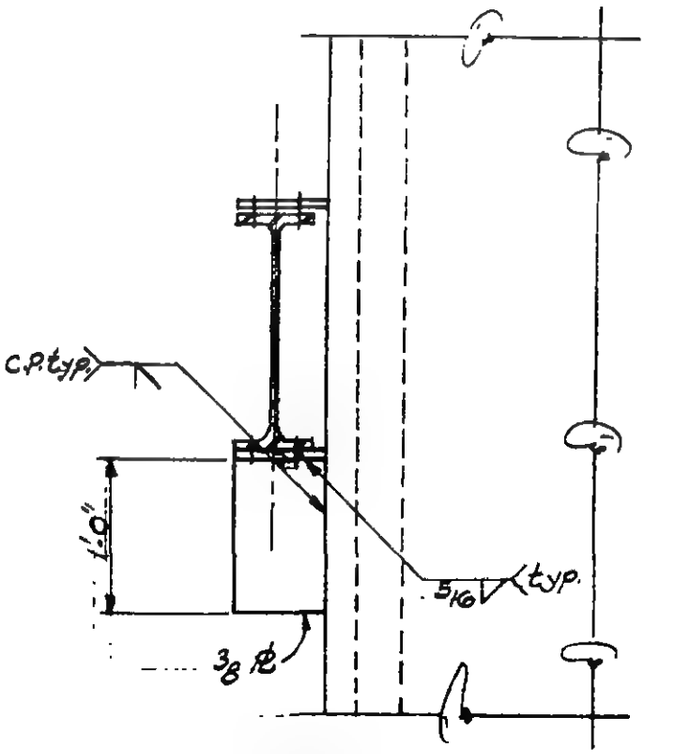

Section b-b

LICENSED PROFESSIONAL ENG. NEW YORK
LESLIE E. ROBERTSON
No. 34360
UNIVERSITY OF THE STATE OF NEW YORK

G-4B1-203

SKILLING - HELLE - CHRISTIANSEN - ROBERTSON Structural & Civil Engineers

PROJECT THE WORLD TRADE CENTER | TITLE CONNECTION DETAIL 397A | DATE 9-29-67

REVISIONS

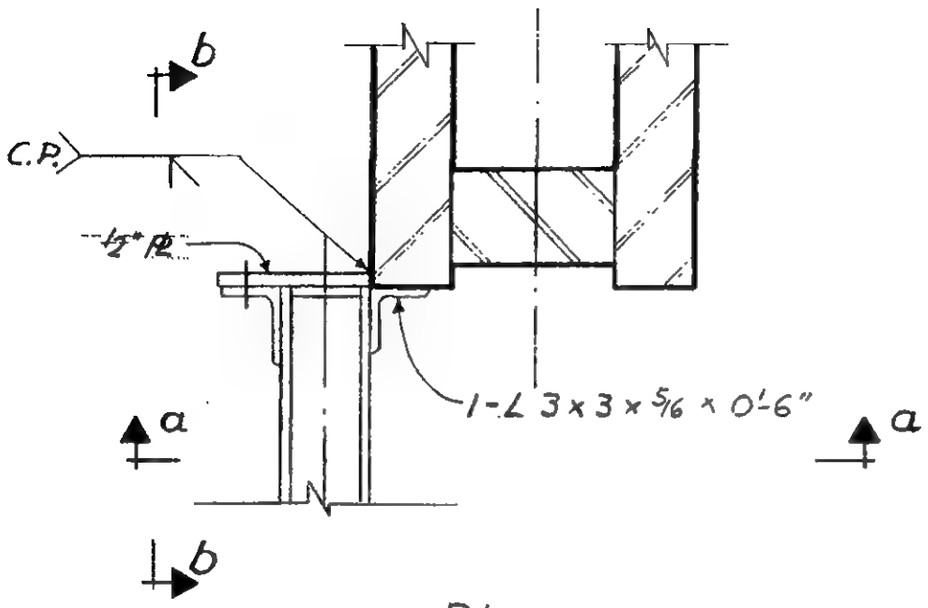

Plan

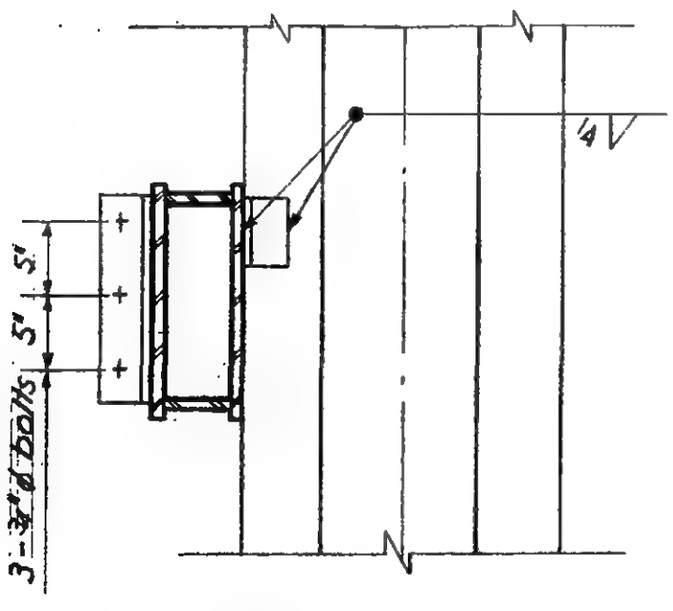

Section a-a

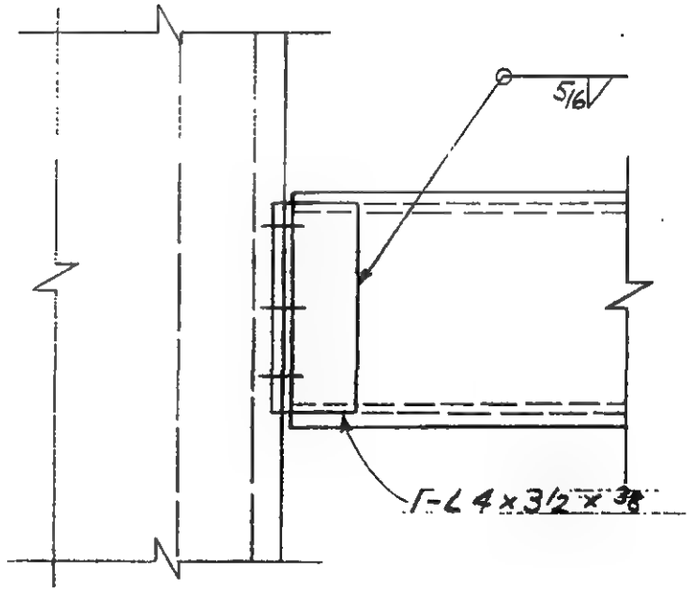

Section b-b

LICENSED PROFESSIONAL ENGINEER
LESLIE E. ROBERTSON
No. 34360
UNIVERSITY OF THE STATE OF NEW YORK

6-AB1-204

SKILLING - HELLE - CHRISTIANSEN - ROBERTSON Structural & Civil Engineers

PROJECT THE WORLD TRADE CENTER | TITLE CONNECTION DETAIL 398A | DATE 10-2-67

REVISIONS

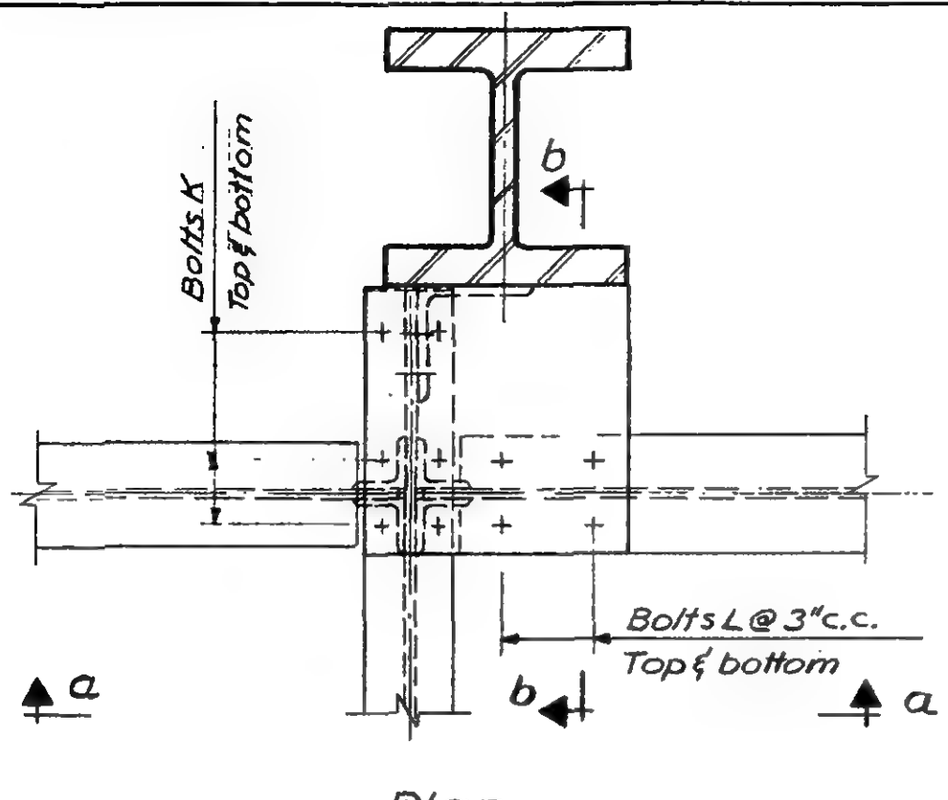

Plan

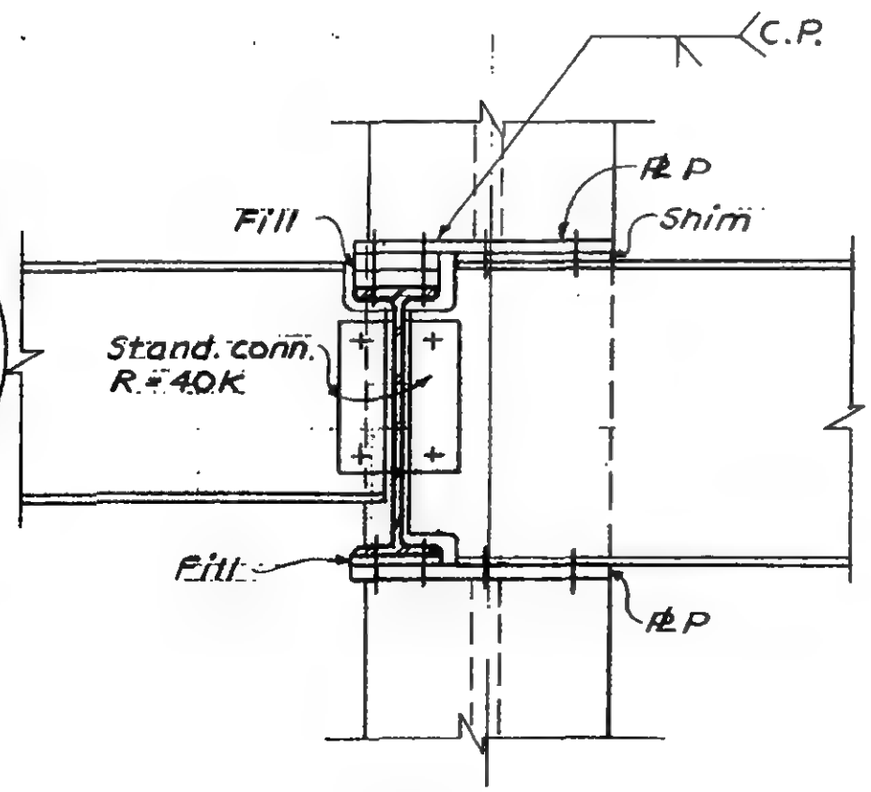

Section a-a

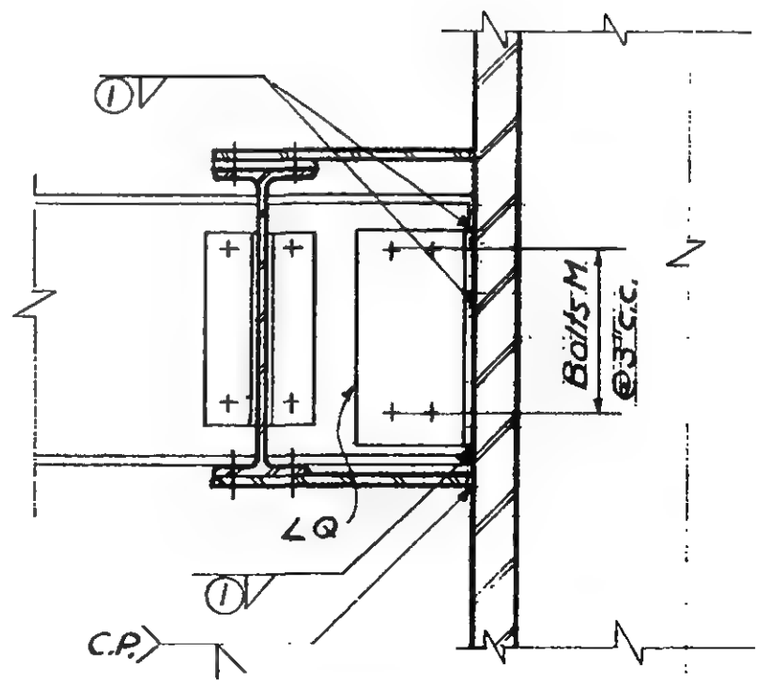

Section b-b

6-AB1-205

LICENSED PROFESSIONAL ENGINEER
LESLIE E. ROBERTSON
No. 34360
UNIVERSITY OF THE STATE OF NEW YORK

SKILLING - HELLE - CHRISTIANSEN - ROBERTSON Structural & Civil Engineers

PROJECT THE WORLD TRADE CENTER | TITLE SCHEDULE FOR DETAIL 398 A, B, C | DATE 10-2-67

REVISIONS

10-5-67

	398A	398B	398C			
PLATES						
P	1/2"	1/2"	5/8"			
R	—	1/2"	1/2"			
ANGLES						
Q	8 x 8 x 3/4 x 1'-3"	6 x 4 x 3/8 x 1'-0"	6 x 4 x 3/8 x 1'-6"			
BOLTS						
K	8 - 3/4" ϕ	4 - 7/8" ϕ	6 - 1" ϕ			
L	6 - 3/4" ϕ	4 - 3/4" ϕ	6 - 3/4" ϕ			
M	10 - 1" ϕ	8 - 3/4" ϕ	8 - 3/4" ϕ			
WELDS						
(1)	9/16	5/16	5/16			

LICENSED PROFESSIONAL ENGINEER
LESLIE E. ROBERTSON
No. 34360
UNIVERSITY OF THE STATE OF NEW YORK

6-ABI-205.1

SKILLING - HELLE - CHRISTIANSEN - ROBERTSON Structural & Civil Engineers

PROJECT THE WORLD TRADE CENTER | TITLE CONNECTION DETAIL 398 B, C | DATE 10-5-67

REVISIONS

9-27-68

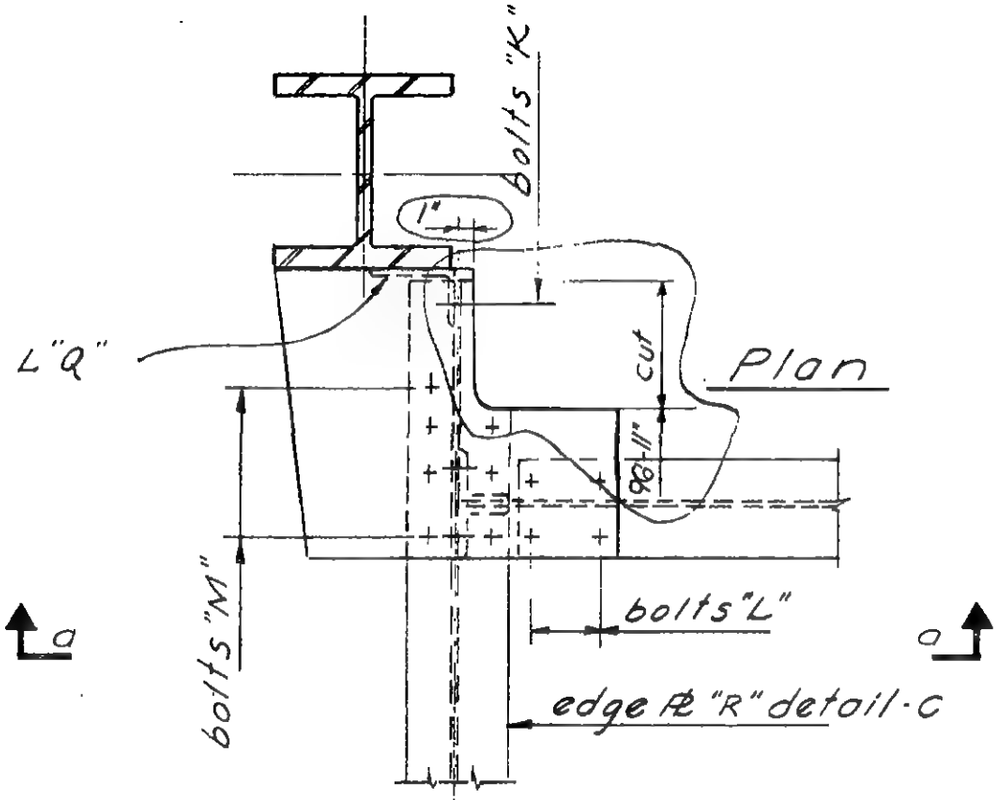

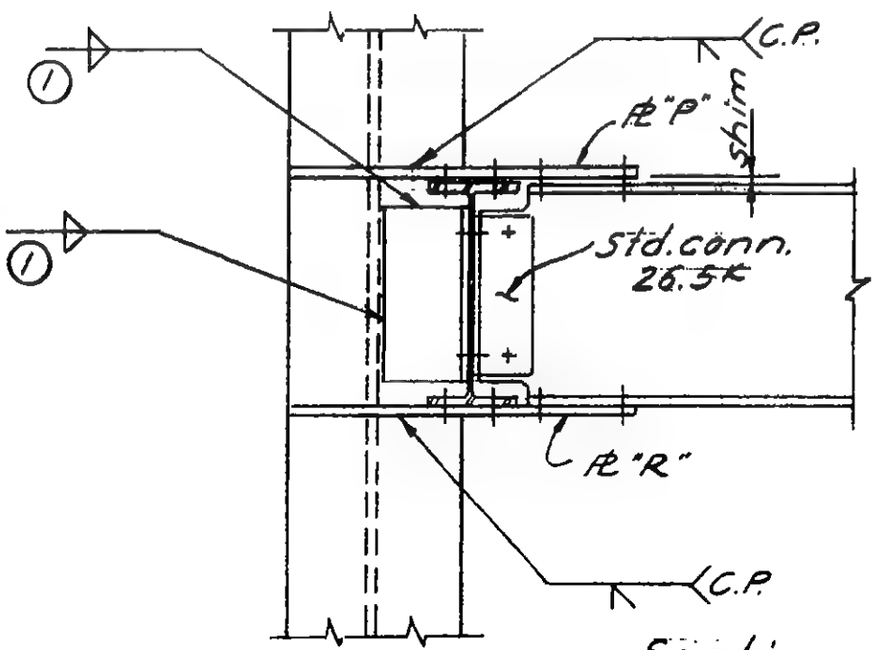

Section a-a (398B)

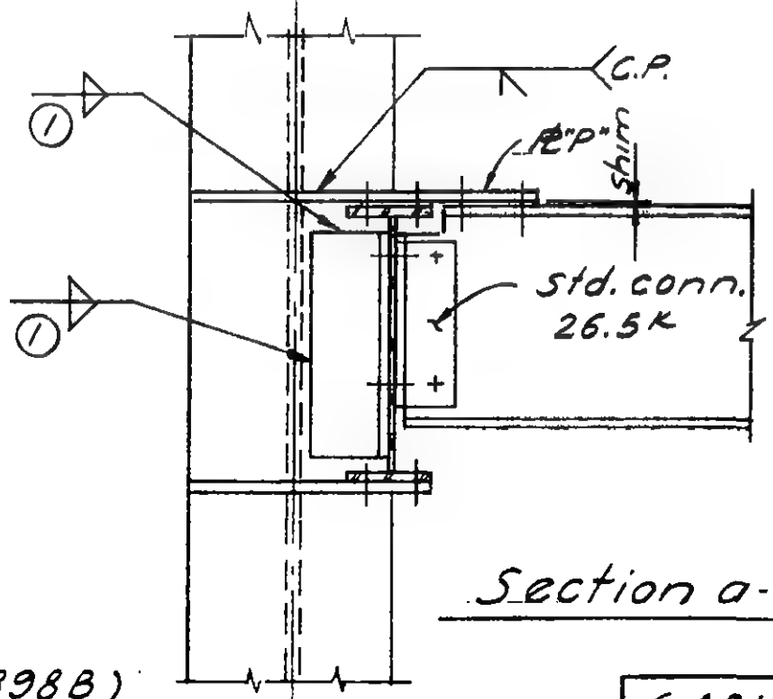

Section a-a (398C)

6-AB1-205.2

LICENSED PROFESSIONAL ENGINEER
LESLIE E. ROBERTSON
No. 34360
UNIVERSITY OF THE STATE OF NEW YORK

SKILLING - HELLE - CHRISTIANSEN - ROBERTSON Structural & Civil Engineers

PROJECT THE WORLD TRADE CENTER | TITLE CONNECTION DETAIL 399 A | DATE 10-5-67

REVISIONS

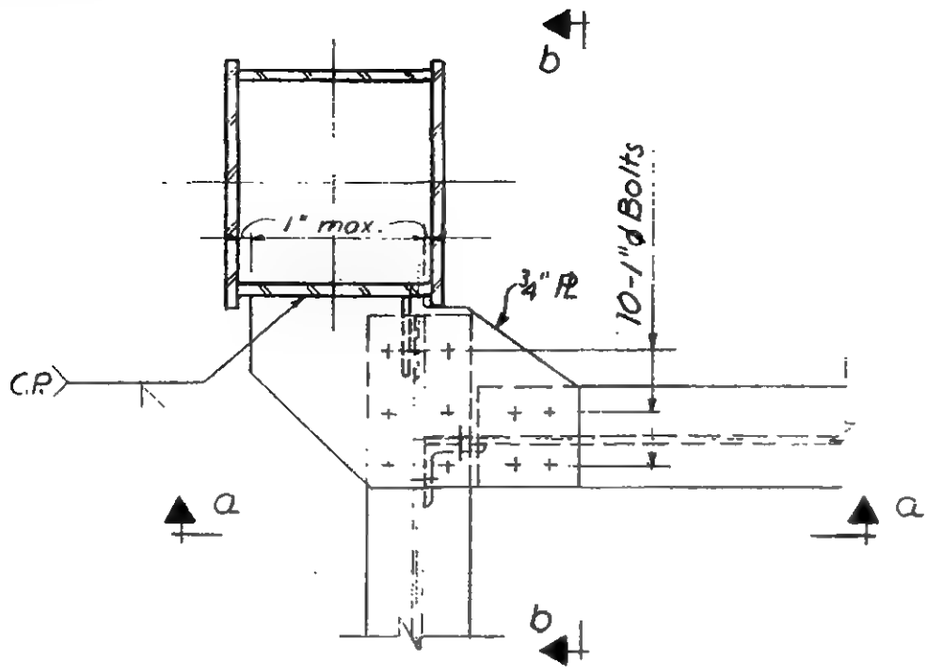

Plan

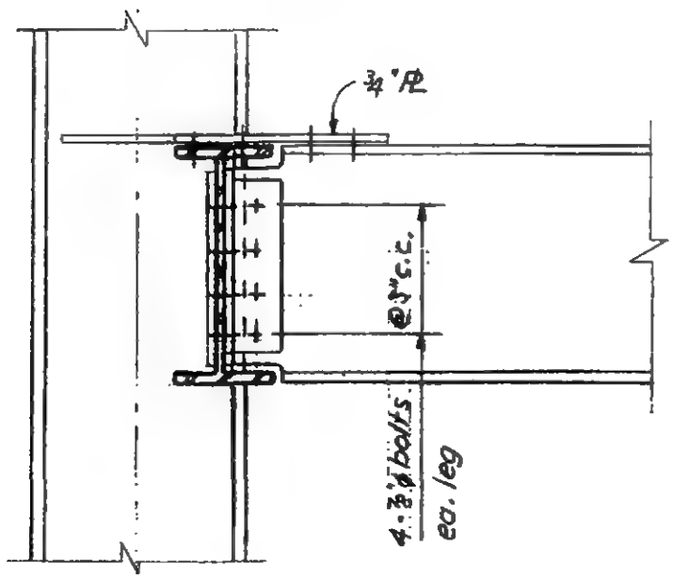

Section a-a

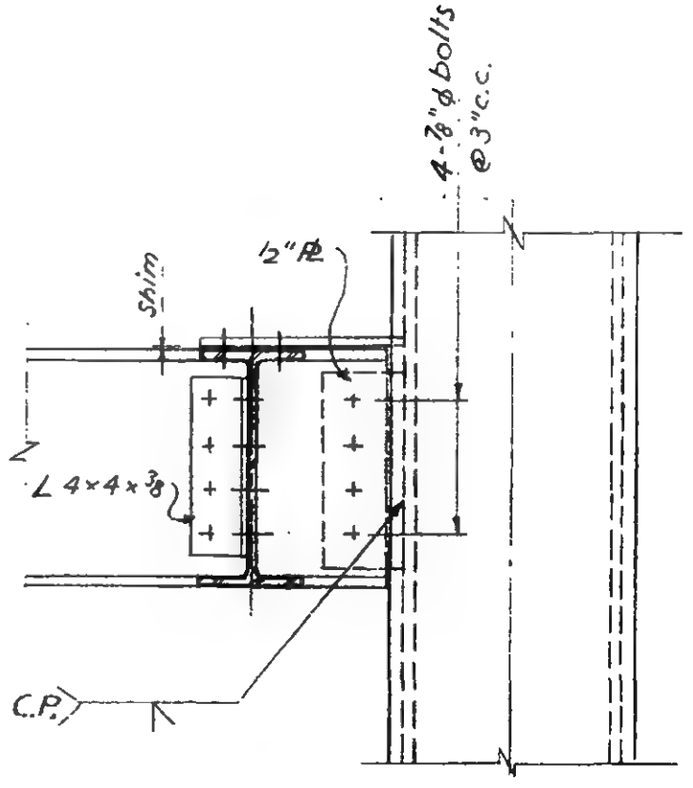

Section b-b

LICENSED PROFESSIONAL ENGINEER
LESLIE E. ROBERTSON
No. 34360
UNIVERSITY OF THE STATE OF NEW YORK

6-AB1-206

SKILLING - HELLE - CHRISTIANSEN - ROBERTSON Structural & Civil Engineers

PROJECT THE WORLD TRADE CENTER | TITLE CONNECTION DETAIL 399B | DATE 2-9-68

REVISIONS

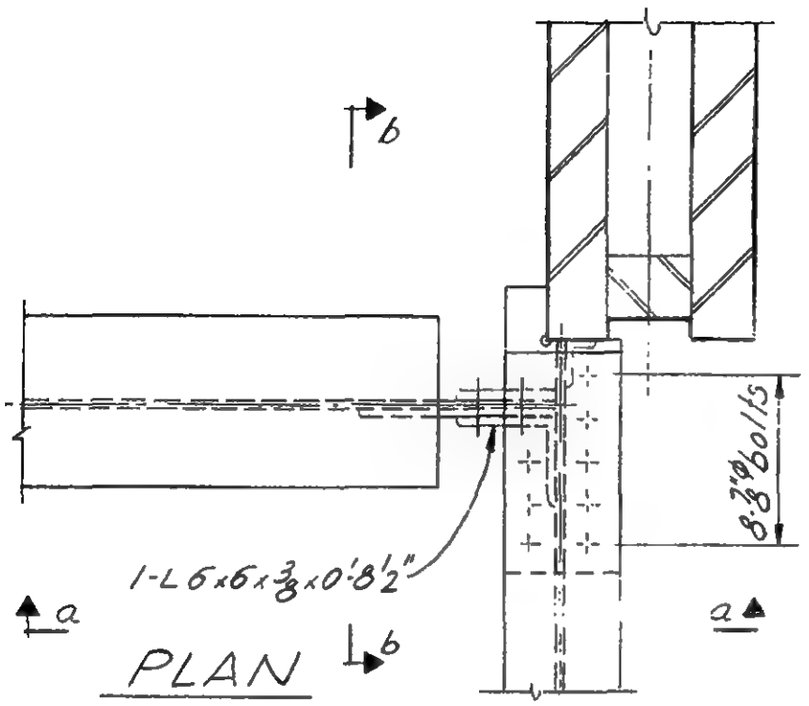

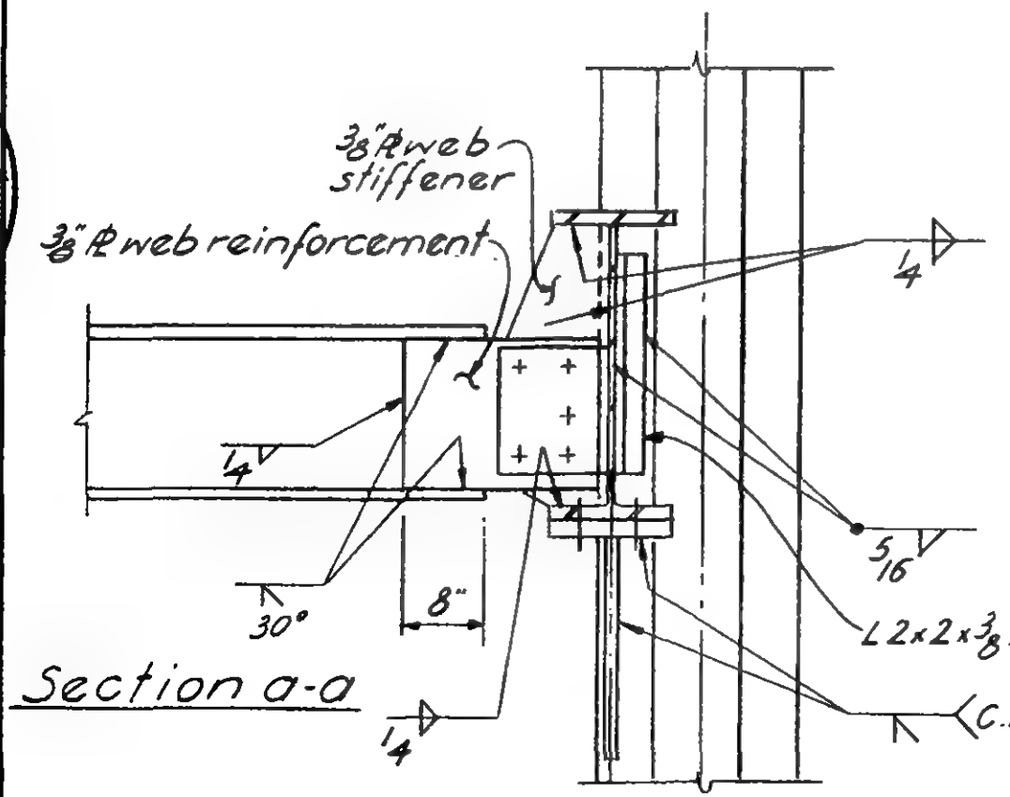

Section a-a

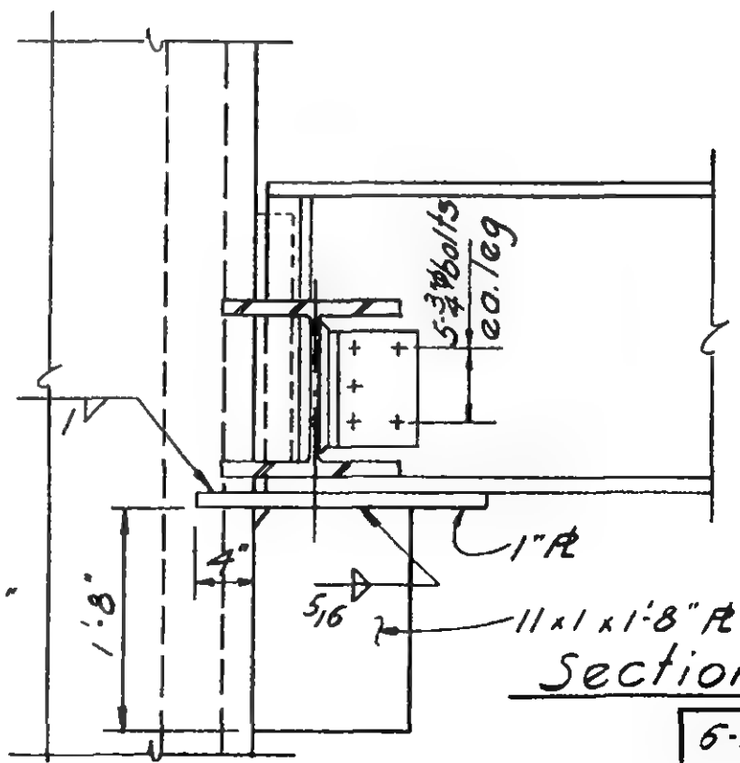

Section b-b

6-AB1-206.1

SKILLING - HELLE - CHRISTIANSEN - ROBERTSON Structural & Civil Engineers

PROJECT THE WORLD TRADE CENTER | TITLE CONNECTION DETAIL 400A | DATE 2-9-68

REVISIONS

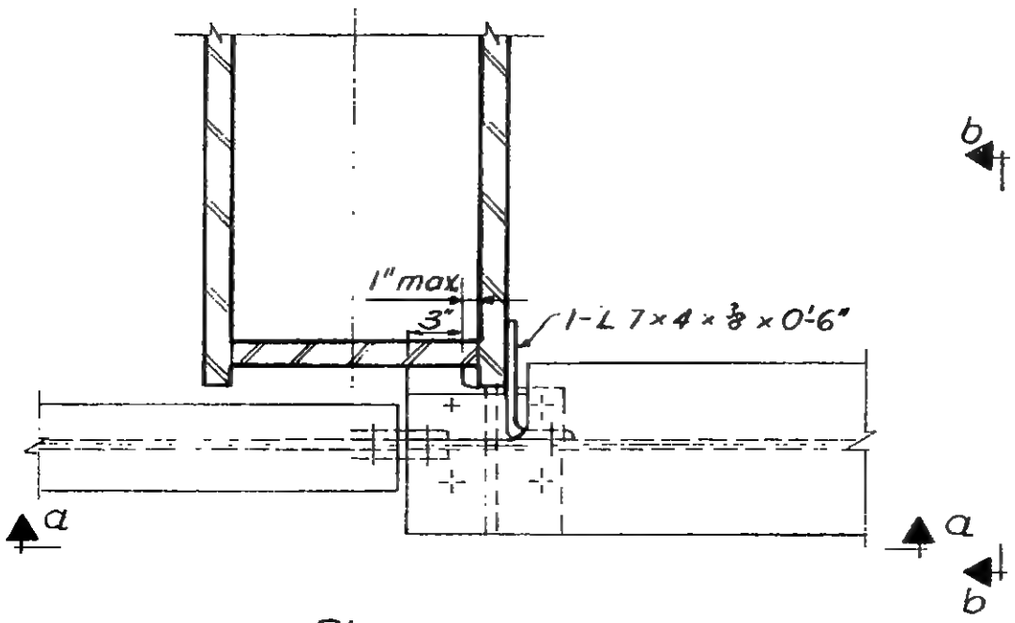

Plan

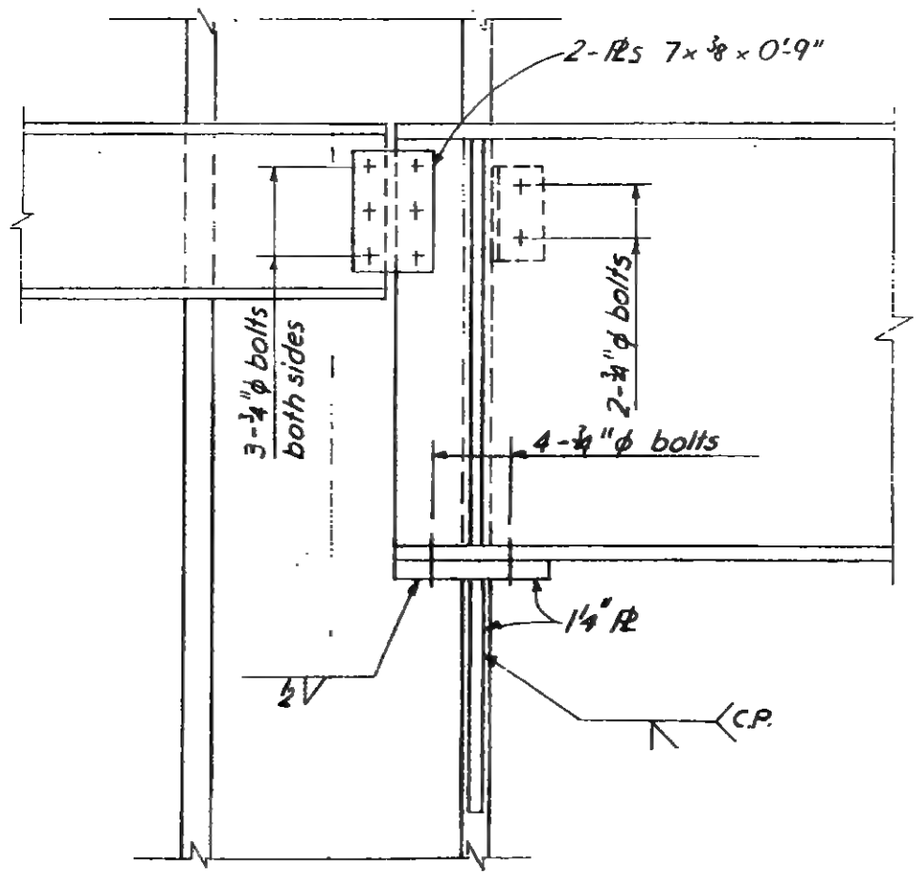

Section a-a

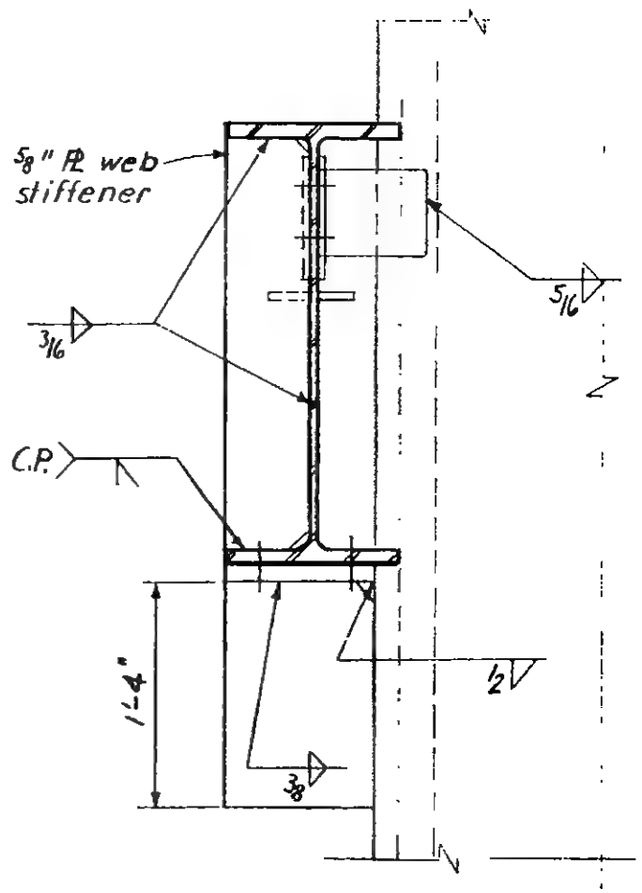

Section b-b

6-AB1-206.2

LICENSED PROFESSIONAL ENGINEER
LESLIE E. ROBERTSON
No. 34360
UNIVERSITY OF THE STATE OF NEW YORK

WORTHINGTON, SKILLING, HELLE & JACKSON — Civil & Structural Engineers

PROJECT: THE WORLD TRADE CENTER | TITLE: CONNECTION DETAIL 701 | DATE: 6-12-67

REVISIONS

6-30-67

For SECTIONS X-X, X_1-X_1, X_2-X_2, Y-Y
See DWG. 6-ABI-234

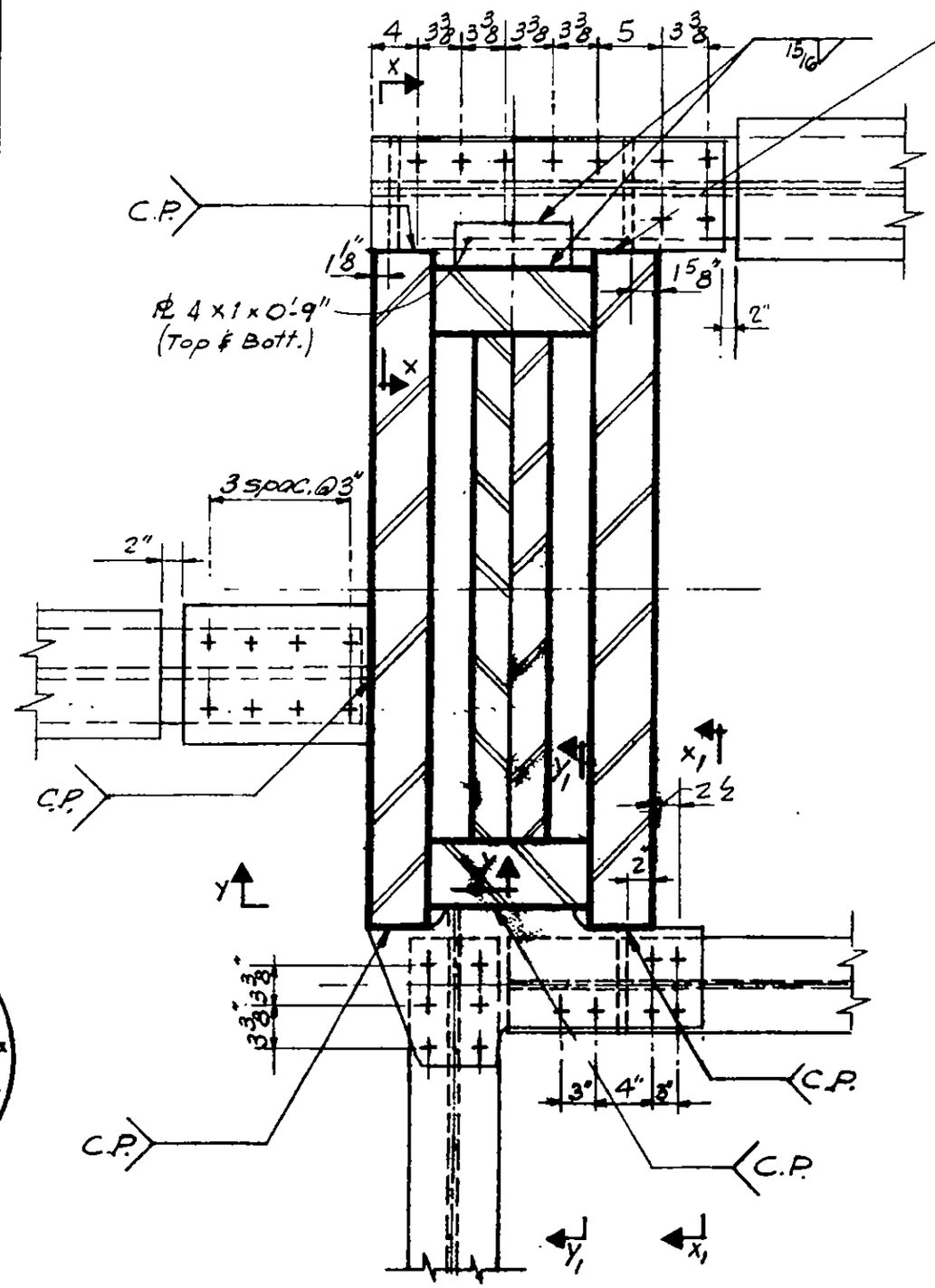

Plan

	SECTION x-x	SECTION x_1-x_1	SECTION y_1-y_1	SECTION y-y
PLATES				
PL P	2 PLs - 8 1/4" x 3/4"	8" x 5/8"	6" x 5/8"	8" x 7/8"
PL Q	8 3/4" x 1"	Same as PL R	7/8"	8" x 1"
PL R	8 3/4" x 1"	7/8"	7/8"	
DIMENSIONS				
A	2'-4 3/4"	2'-4 1/4"	2'-3"	1'-1 3/4"
B	1'-0"	0'-10"	0'-8"	1'-4"
BOLTS				
K	9-1 1/8" ϕ (A490)	6-1" ϕ (A490)	6-1 1/8" ϕ (A490)	8-1" ϕ (A490)
L	9-1 1/8" ϕ (A490)	6-1" ϕ (A490)	6-1 1/8" ϕ (A490)	8-1" ϕ (A490)
WELDS				
(1)	9/16	7/16	7/16	3/8
(2)	9/16	7/16	7/16	5/8
(3)	C.P	C.P.	C.P.	C.P.
(5)	15/16			
(6)	15/16			

LICENSED PROFESSIONAL ENGINEER
LESLIE E. ROBERTSON
No. 34360
UNIVERSITY OF THE STATE OF NEW YORK

6-ABI-207

WORTHINGTON, SKILLING, HELLE & JACKSON — Civil & Structural Engineers

PROJECT: THE WORLD TRADE CENTER | TITLE: CONNECTION DETAIL 702 | DATE: 6-12-67

REVISIONS

6-30-67

For SECTIONS X-X, Y-Y
See DWG. 6-ABI-234

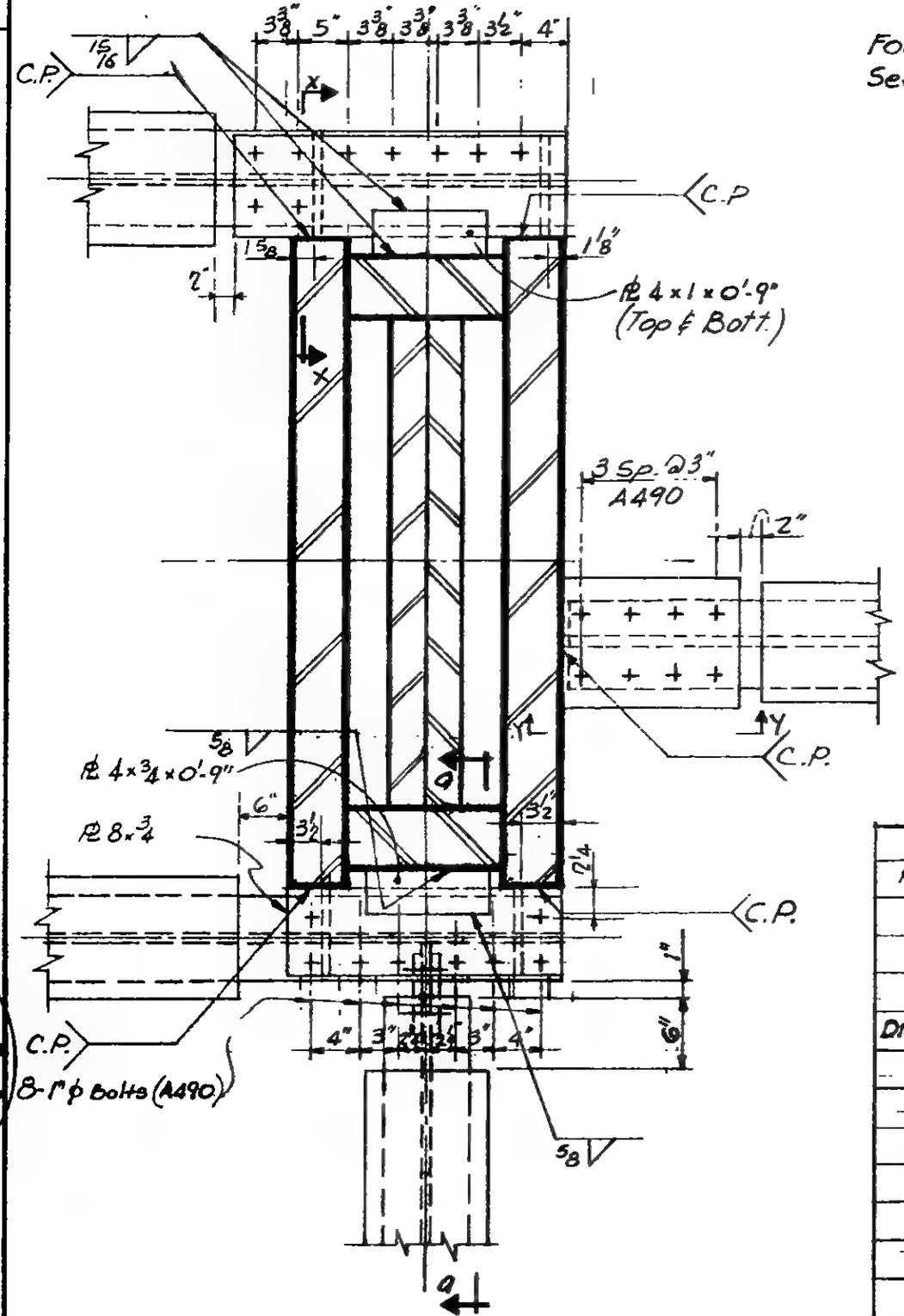

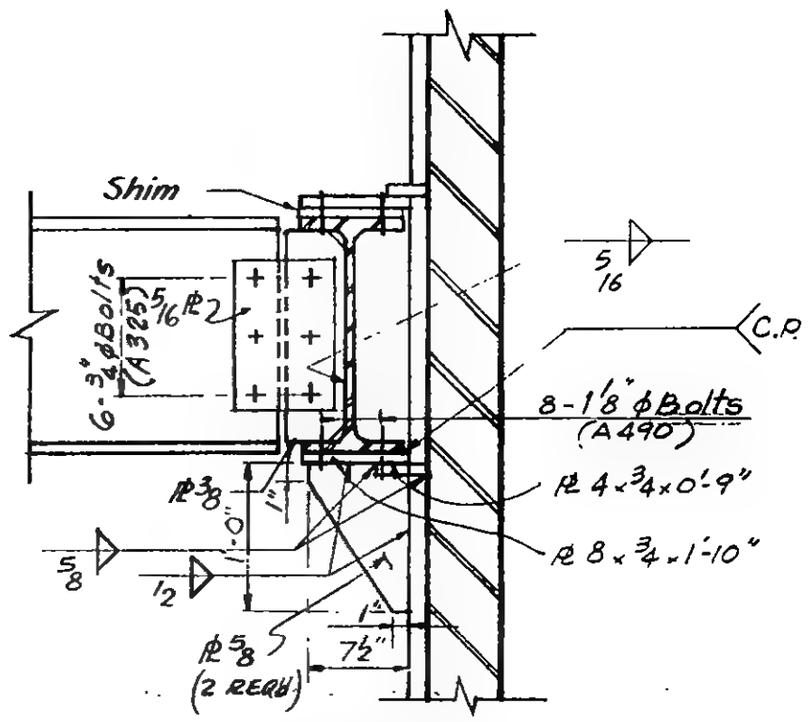

Section a-a

	SECTION X-X	SECTION Y-Y
PLATES		
PL P	2-PLs-8 1/4" x 3/4"	8" x 7/8"
PL Q	8 3/4" x 1"	8" x 1"
PL R	8 1/2" x 1"	8" x 1"
DIMENSIONS		
A	2'-4 3/4"	1'-1 3/4"
B	1'-6"	1'-4"
BOLTS		
K	9-1 1/8" ϕ (A490)	8-1" ϕ (A490)
L	9-1 1/8" ϕ (A490)	8-1" ϕ (A490)
WELDS		
①	9/16	5/8
②	9/16	5/8
③	C.P.	C.P.
⑤	15/16	—
⑥	15/16	—

LICENSED PROFESSIONAL ENGINEER — LESLIE E. ROBERTSON — No. 34360 — UNIVERSITY OF THE STATE OF NEW YORK

6-ABI-208

SKILLING - HELLE - CHRISTIANSEN - ROBERTSON Structural & Civil Engineers

PROJECT THE WORLD TRADE CENTER | TITLE CONNECTION DETAIL 702 A, 702 B | DATE 2-9-68

REVISIONS

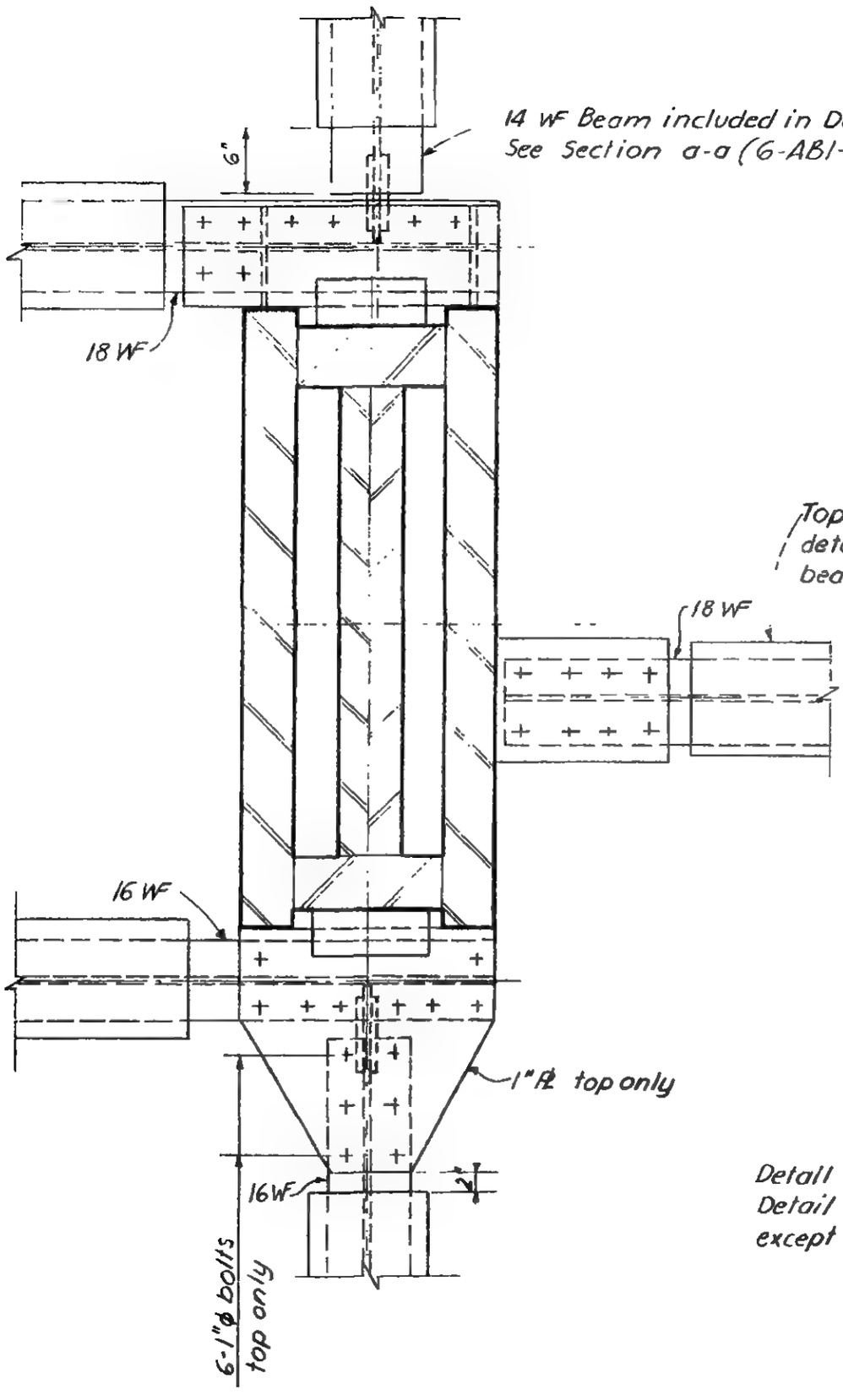

Detail 702 A & 702 B some as Detail 702 (6-AB1-208) except as noted.

LICENSED PROFESSIONAL ENGINEER
LESLIE E. ROBERTSON
No. 34360
UNIVERSITY OF THE STATE OF NEW YORK

6-AB1-208.1

WORTHINGTON, SKILLING, HELLE & JACKSON — Civil & Structural Engineers

PROJECT THE WORLD TRADE CENTER | TITLE CONNECTION DETAIL 703, 703A | DATE 6-12-67

REVISIONS

6-30-67

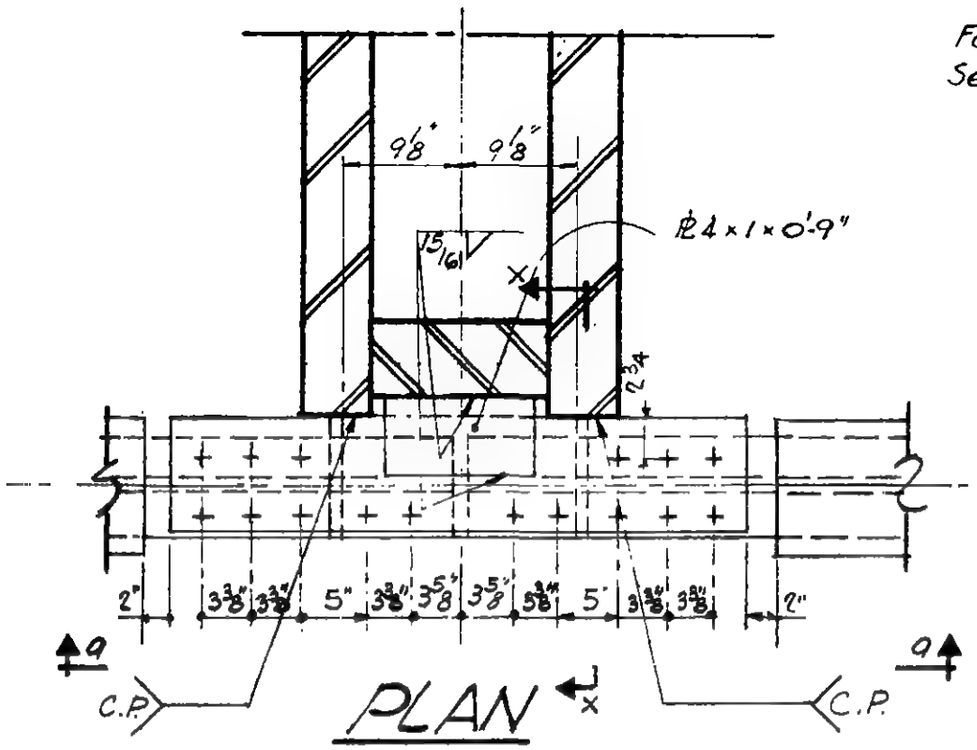

PLAN

DETAIL 703

For SECTION X-X, X1-X1
See Dwg. 6-ABI-234

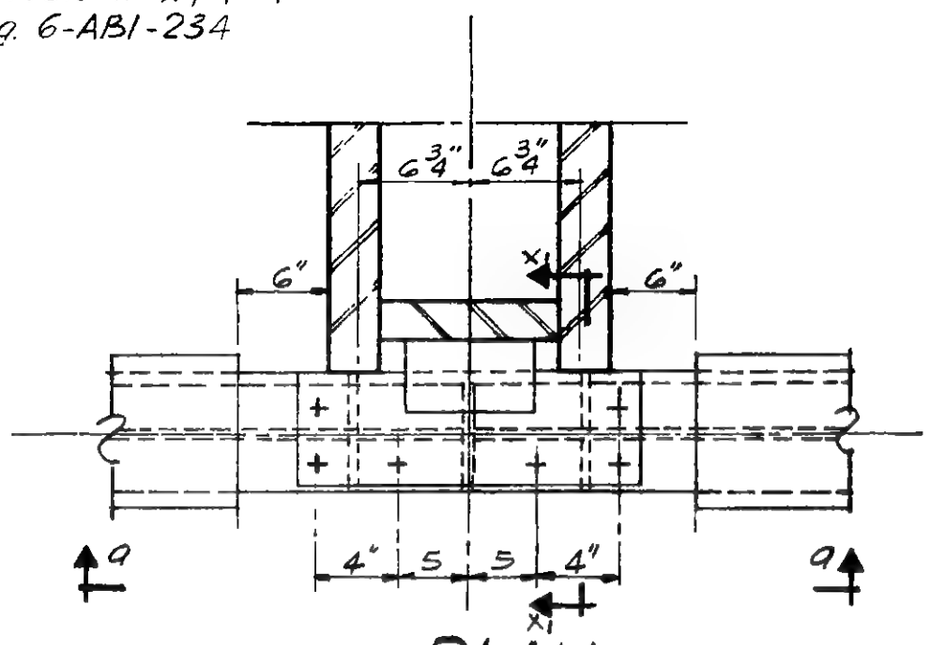

PLAN

DETAIL 703A

Remainder of plan same as Detail 703

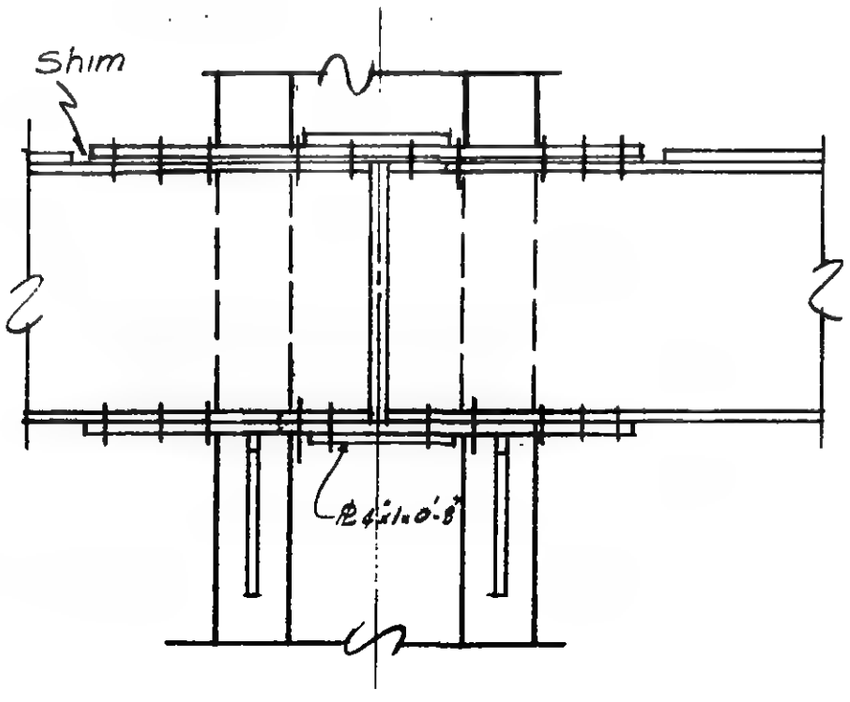

SECTION a-a

	SECTION X-X	SECTION X1-X1
PLATES		
PL P	2 PLs 8¼" x ¾"	2-8¼" x ⅝"
PL Q	8¾" x 1"	8¾" x ¾"
PL R	8¾" x 1"	8¾" x ¾"
DIMENSIONS		
A		
B	1'-0"	1'-0"
BOLTS		
K	16-1⅛"ϕ(A490)	6-1"ϕ (A325)
L	16-1⅛ϕ(490)	6-1"ϕ(A325)
WELDS		
①	9/16	½
②	9/16	½
③	C.P.	C.P.
⑤	15/16	9/16
⑥	15/16	9/16

6-ABI-209

LICENSED PROFESSIONAL ENGINEER — LESLIE E. ROBERTSON — No. 34360 — UNIVERSITY OF THE STATE OF NEW YORK

SKILLING - HELLE - CHRISTIANSEN - ROBERTSON Structural & Civil Engineers

PROJECT THE WORLD TRADE CENTER | TITLE CONNECTION DETAIL 703B, 703C | DATE 2-9-68

REVISIONS

3-11-68

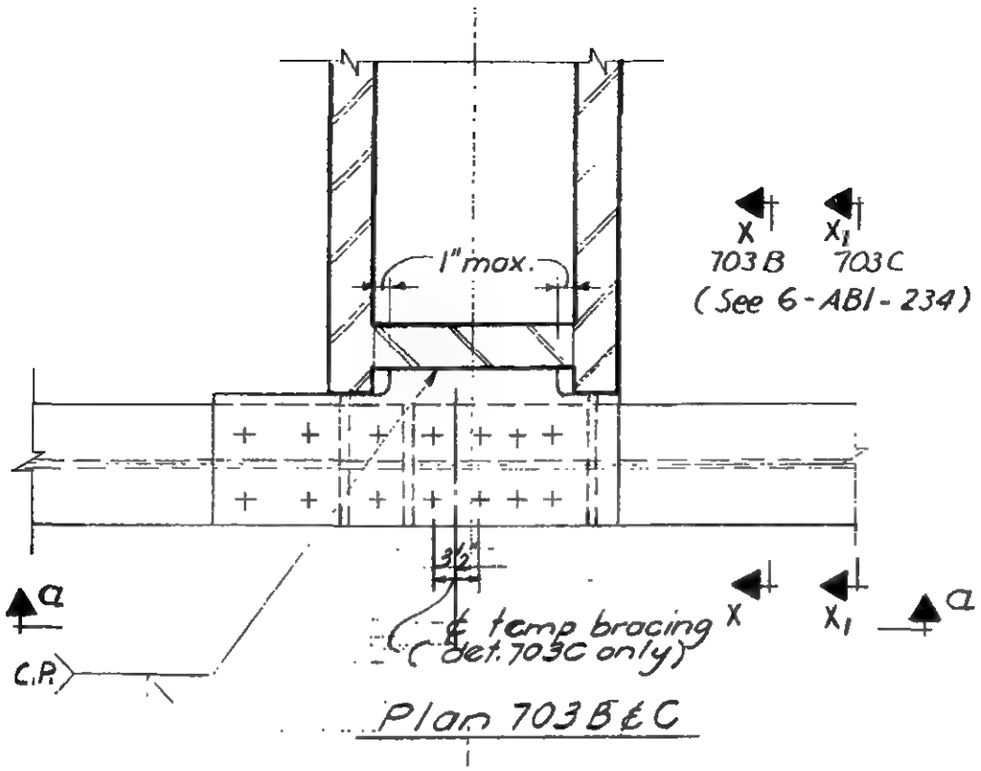

Plan 703B & C

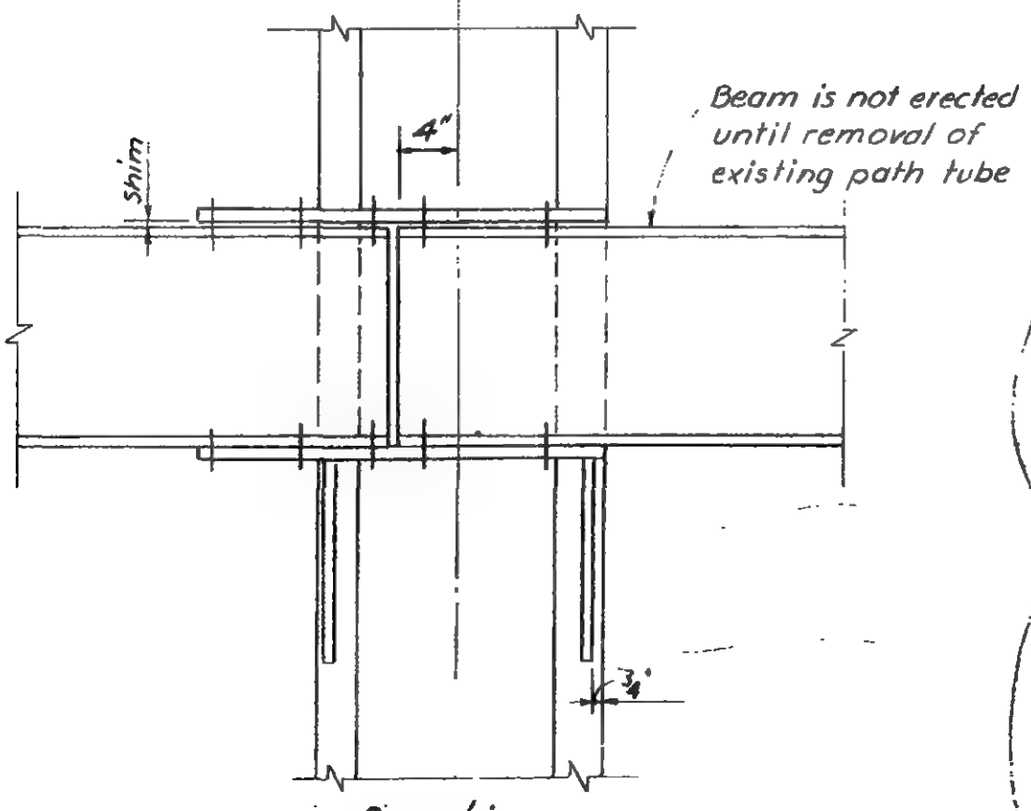

Section a-a
(After removal of path tube)

SCHEDULE		
	Section x-x	Section x,-x,
PLATES		
P	2 Pls 8¼" x ¾"	2 Pls 8" x ⅝"
Q	10½" x 1"	8" x ¾"
R	10½" x 1"	8" x ¾"
DIMENSION		
B	1'-0"	0'-9"
BOLTS		
K	16 - 1⅛" ϕ (A490)	12 - 1" ϕ (A490)
L	16 - 1⅛" ϕ (A490)	12 - 1" ϕ (A490)
WELDS		
1	9/16	½
②	9/16	½
③	C.P	C.P.
④	—	—
⑤	—	—
⑥	—	—
⑦	—	—

For section X-X, X1-X1 see Dwg. 6-ABI-234

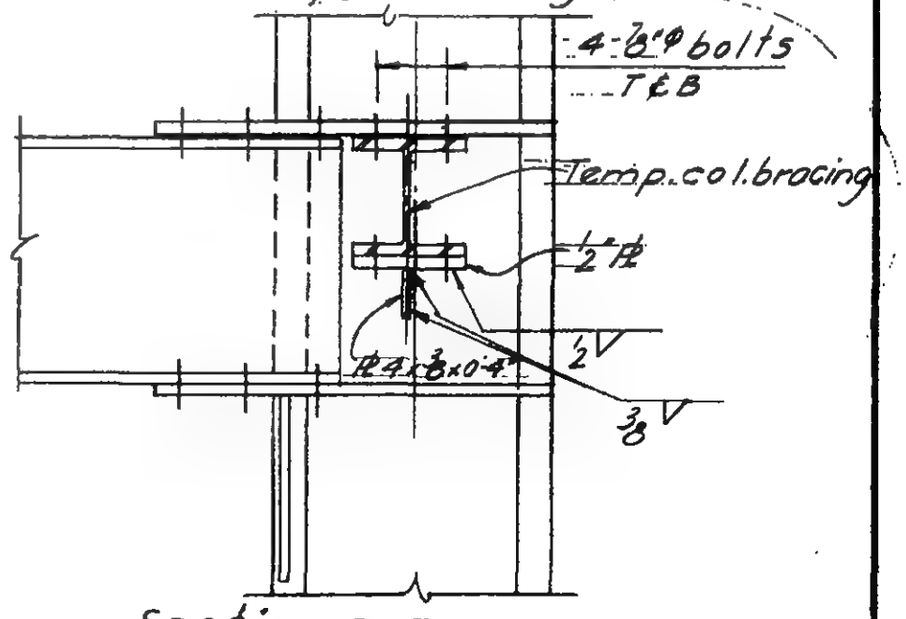

Section a-a
(Before removal)

6-ABI-209.1

LICENSED PROFESSIONAL ENGINEER
LESLIE E. ROBERTSON
No. 34360
UNIVERSITY OF THE STATE OF NEW YORK

SKILLING - HELLE - CHRISTIANSEN - ROBERTSON Structural & Civil Engineers

PROJECT THE WORLD TRADE CENTER | TITLE CONNECTION DETAIL 703D | DATE 2-9-68

REVISIONS

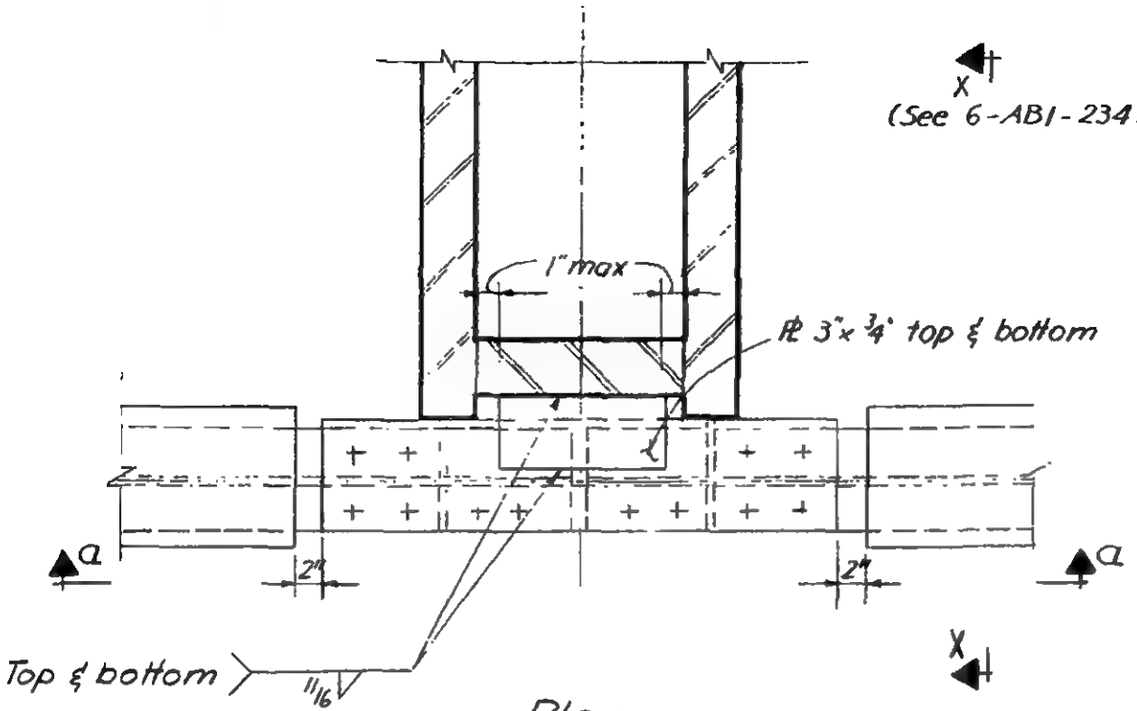

Plan

SCHEDULE	
	Section x-x
PLATES	
P	2 - 8" x 5/8"
Q	8" x 3/4"
R	8" x 3/4"
DIMENSION	
B	0'-9"
BOLTS	
K	12 - 1" ϕ (A490)
L	12-1" ϕ (A490)
WELDS	
①	½
②	½
③	C.P.

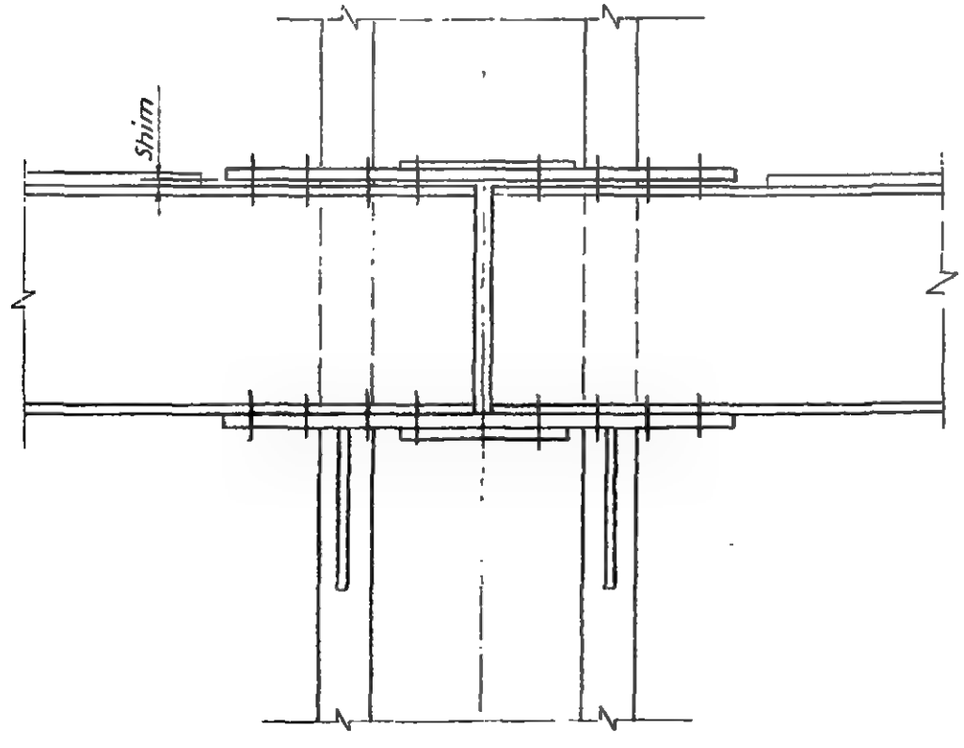

Section a-a

LICENSED PROFESSIONAL ENGINEER
LESLIE E. ROBERTSON
No. 34360
UNIVERSITY OF THE STATE OF NEW YORK

6-ABI-209.2

WORTHINGTON, SKILLING, HELLE & JACKSON — Civil & Structural Engineers

PROJECT THE WORLD TRADE CENTER | TITLE CONNECTION DETAIL 704 | DATE 6-12-67

REVISIONS

6-30-67

NOTE:
For SECTION Y-Y, Y1-Y1, Y2-Y2
See Dwg. 6-ABI-234

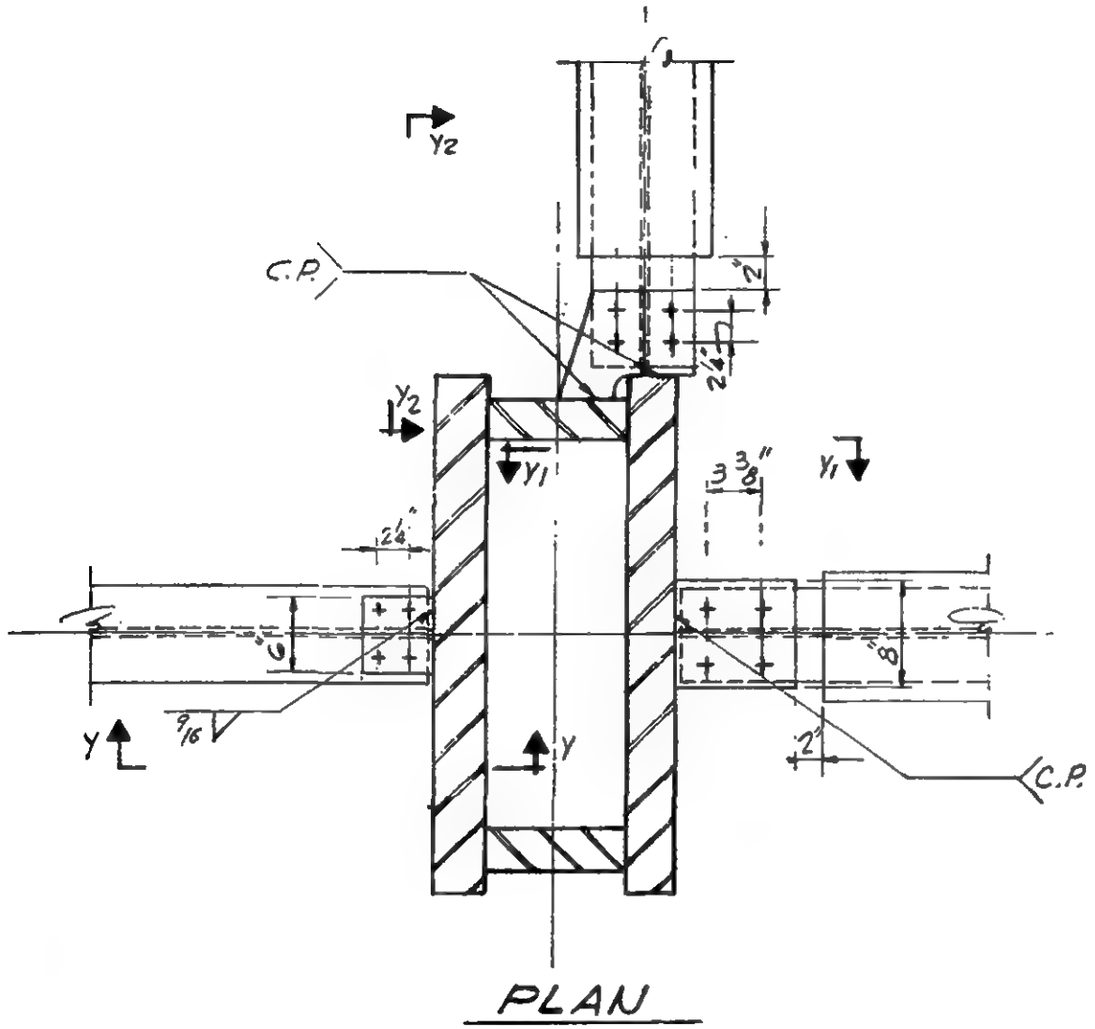

PLAN

	SECTION Y-Y	SECTION Y1-Y1	SECTION Y2-Y2
PLATES			
℄ P	5½"×½"	6"×⅝"	5½"×½"
℄ Q	6¼"×⅝"	9"×¾"	Same as ℄ R
℄ R	6¼"×⅝"	9"×¾"	½"
DIMENSIONS			
A	0'-10¼"	0'-11"	3'-2¼"
B	0'-6"	1'-0"	0'-8"
BOLTS			
K	4-¾"ϕ (A325)	4-1⅛"ϕ (A490)	4-¾"ϕ (A325)
L	4-¾"ϕ (A325)	4-1⅛"ϕ (A490)	4-¾"ϕ (A325)
WELDS			
①	⅜	½	⅜
②	⅜	½	⅜
③	—	C.P.	C.P.
④	9/16	—	—

LICENSED PROFESSIONAL ENGINEER
LESLIE E. ROBERTSON
No. 34360
UNIVERSITY OF THE STATE OF NEW YORK

G-AB:-210

WORTHINGTON, SKILLING, HELLE & JACKSON — Civil & Structural Engineers

PROJECT THE WORLD TRADE CENTER | TITLE CONNECTION DETAIL 705, 705A | DATE 6-12-67

REVISIONS

6-30-67

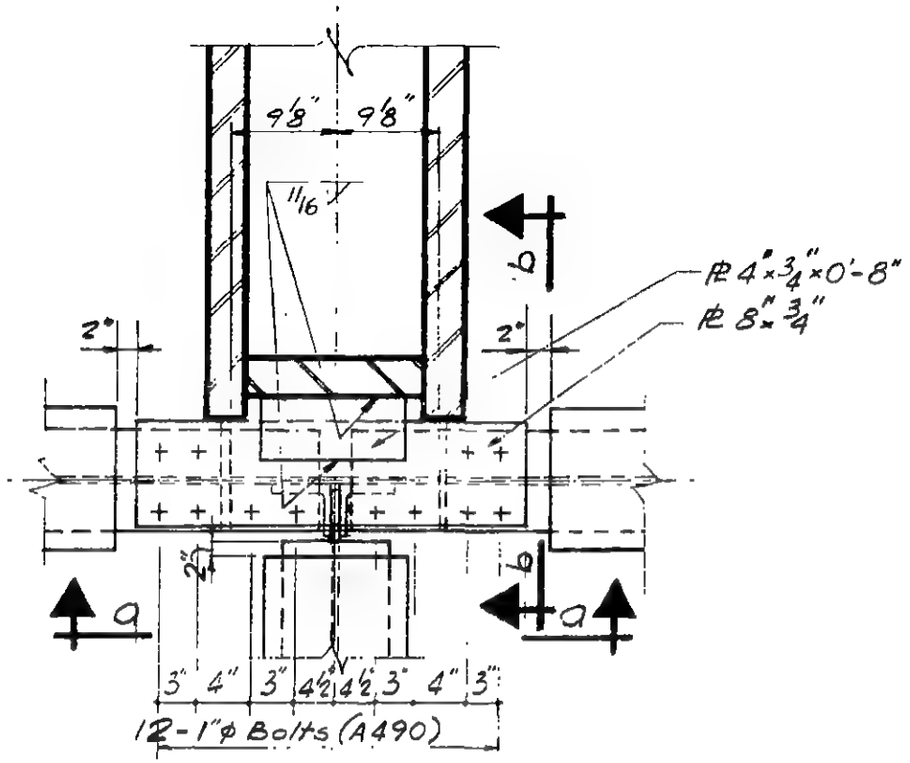

PLAN of DETAIL 705

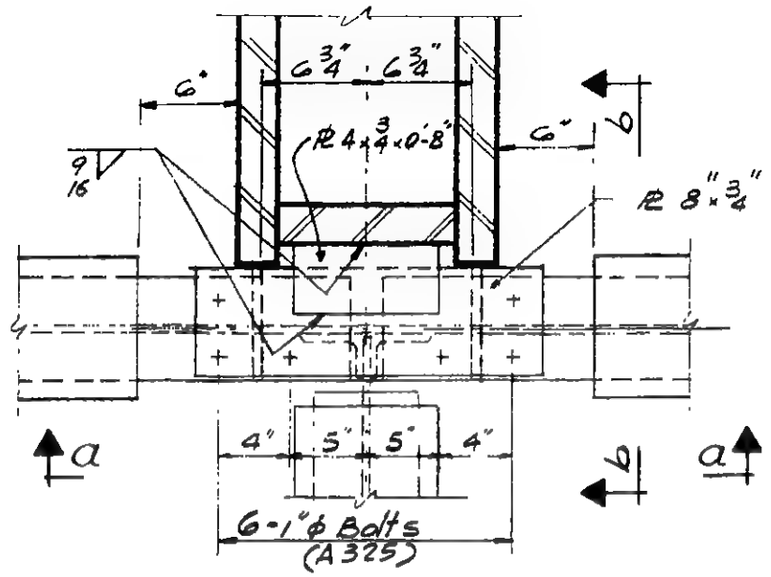

PLAN of DETAIL 705A

Remainder of Plan same as Detail 705

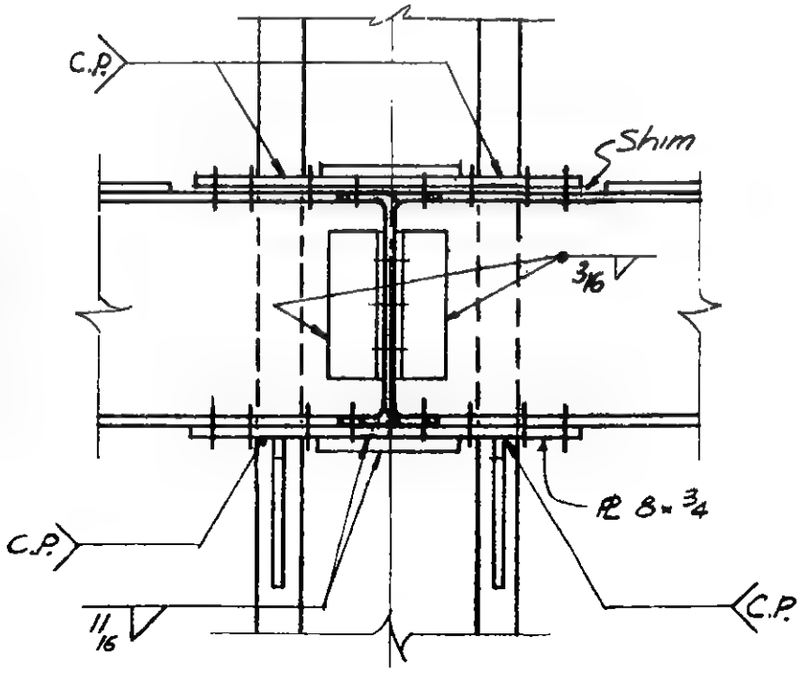

SECTION a-a

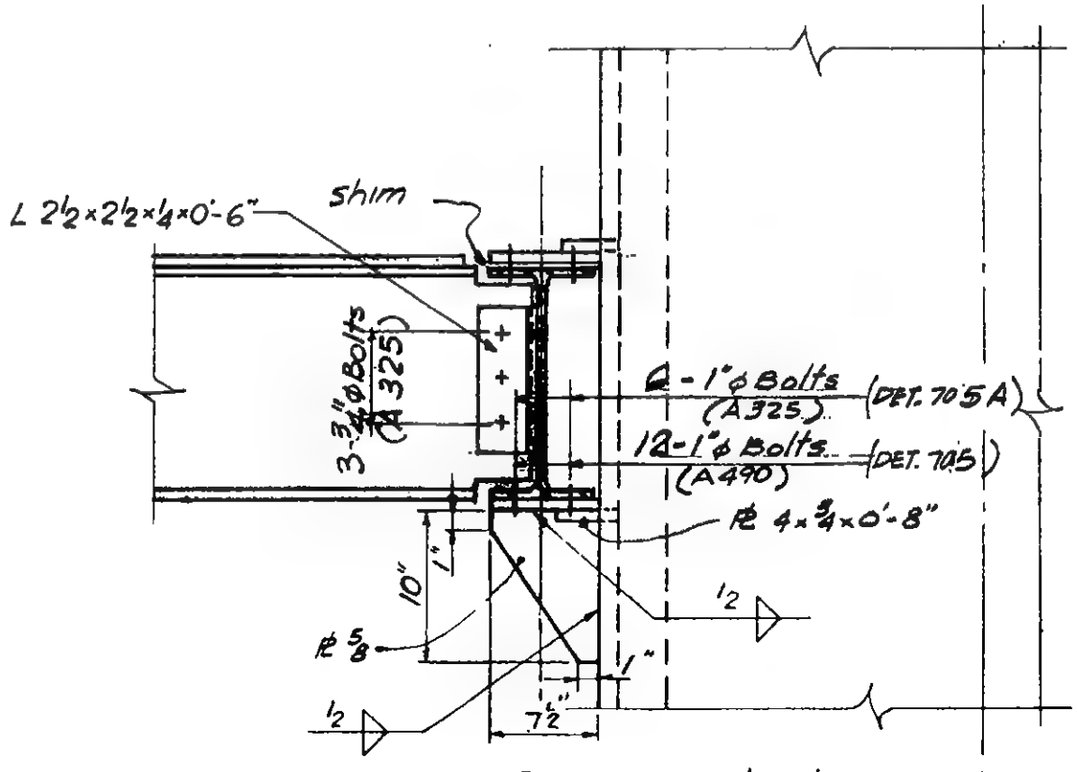

SECTION b-b

LICENSED PROFESSIONAL ENGINEER — LESLIE E. ROBERTSON — No. 34360 — UNIVERSITY OF THE STATE OF NEW YORK

6-ABI-211

WORTHINGTON, SKILLING, HELLE & JACKSON — Civil & Structural Engineers

PROJECT THE WORLD TRADE CENTER | TITLE CONNECTION DETAIL 705; 705A | DATE 6-12-67

REVISIONS

6-30-67

11-17-67

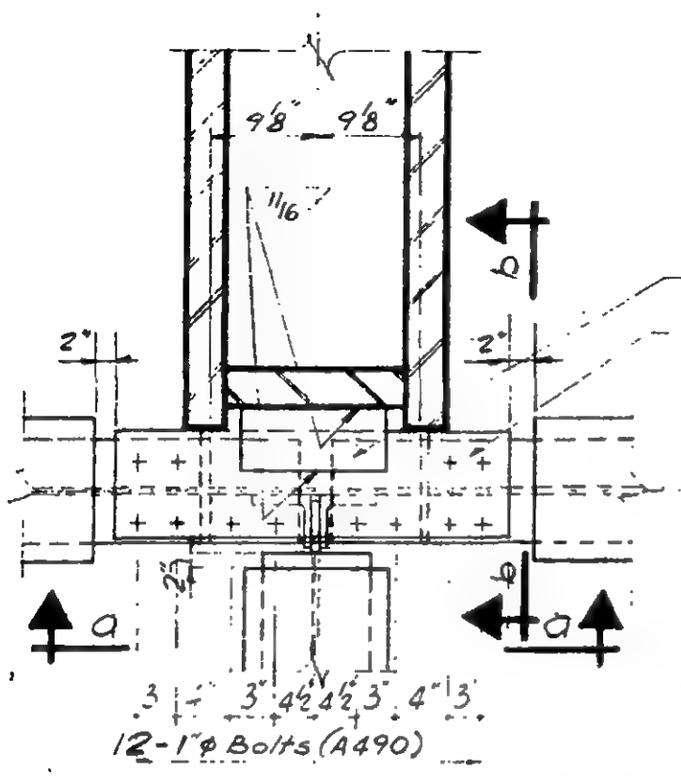

PLAN of DETAIL 705

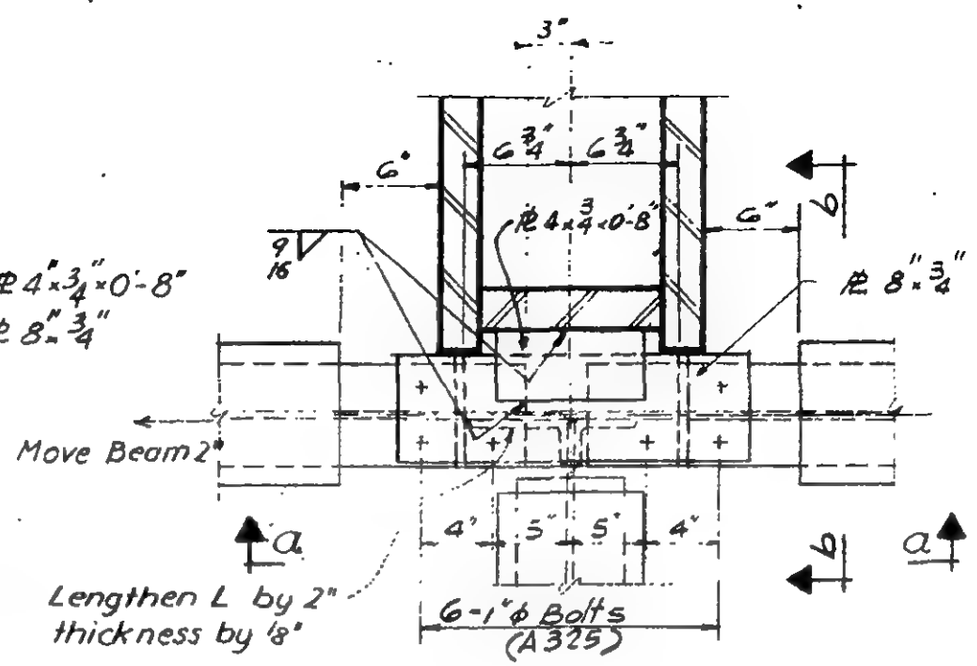

PLAN of DETAIL 705A

Remainder of Plan same as Detail 705

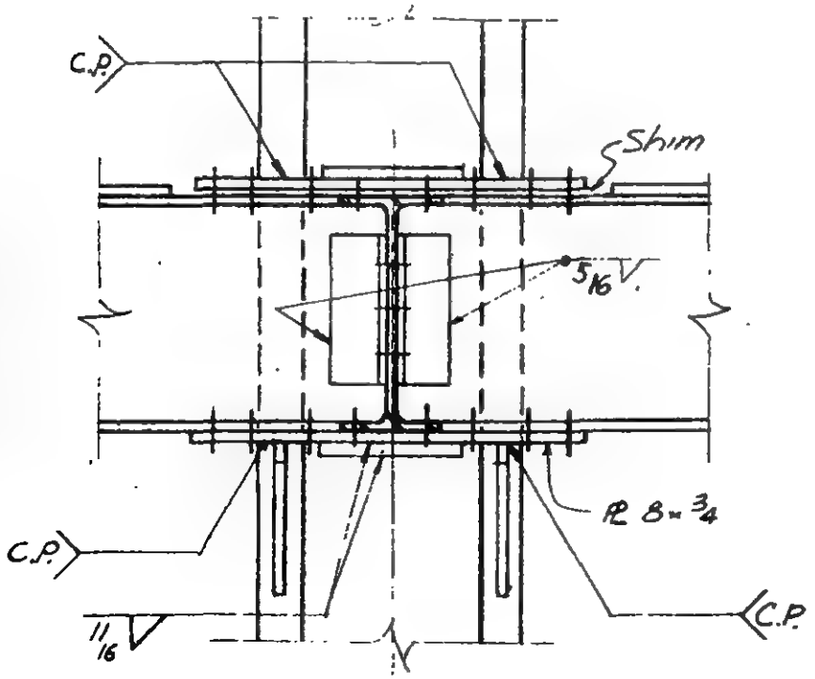

SECTION a-a

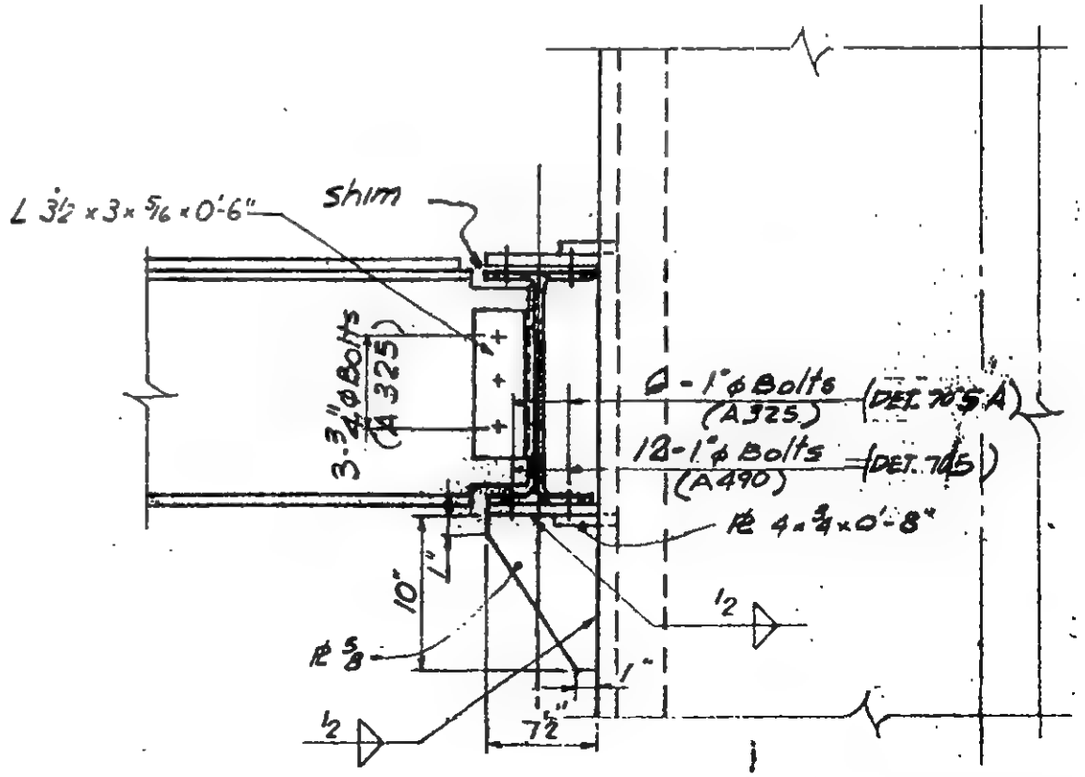

SECTION b-b

LICENSED PROFESSIONAL ENGINEER — LESLIE E. ROBERTSON — No. 34360 — UNIVERSITY OF THE STATE OF NEW YORK

6-ABI-211ALT

SKILLING - HELLE - CHRISTIANSEN - ROBERTSON Structural & Civil Engineers

PROJECT THE WORLD TRADE CENTER | TITLE CONNECTION DETAIL 705B, 705C | DATE 2-9-68

REVISIONS

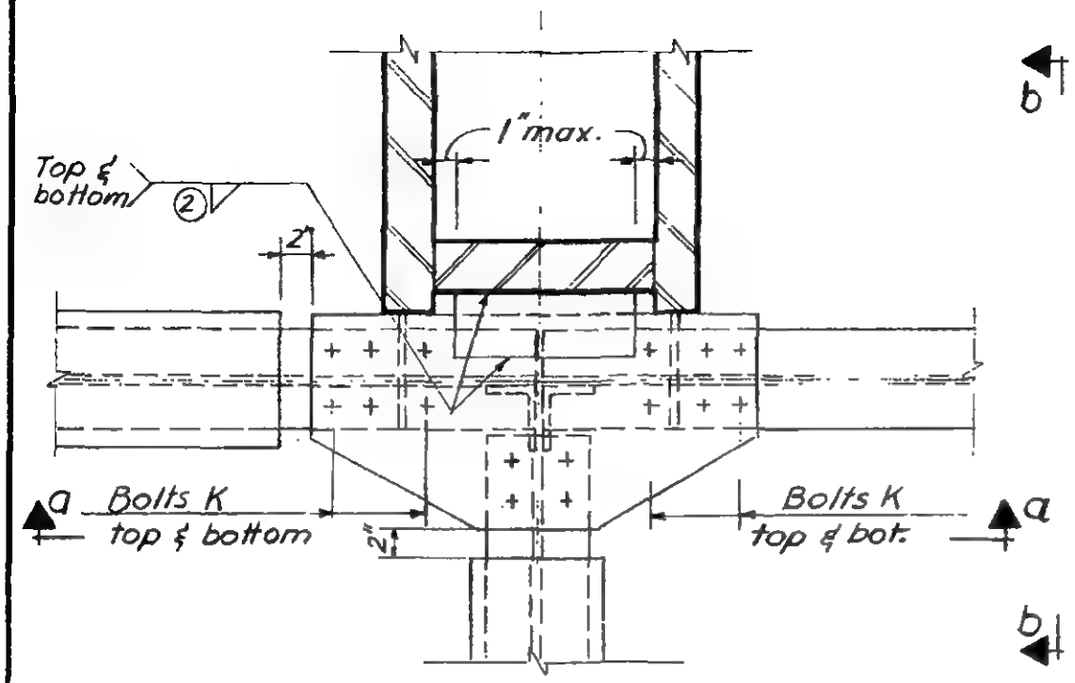

Plan

	705 B	705 C
PLATES		
P	2 Pls 8" x 5/8"	2 Pls 8" x 5/8"
Q	1/4"	1"
R	3" x 7/8"	4" x 1"
DIMENSION		
B	0'-9"	1'-0"
BOLTS		
K	6-1" ϕ (A490)	8-1 1/8" ϕ (A490)
L	8-7/8" ϕ (A325)	8-7/8" ϕ (A325)
WELDS		
①	1/2	1/2
②	7/8	15/16
Std. Conn.	39.8 k	70.7 k

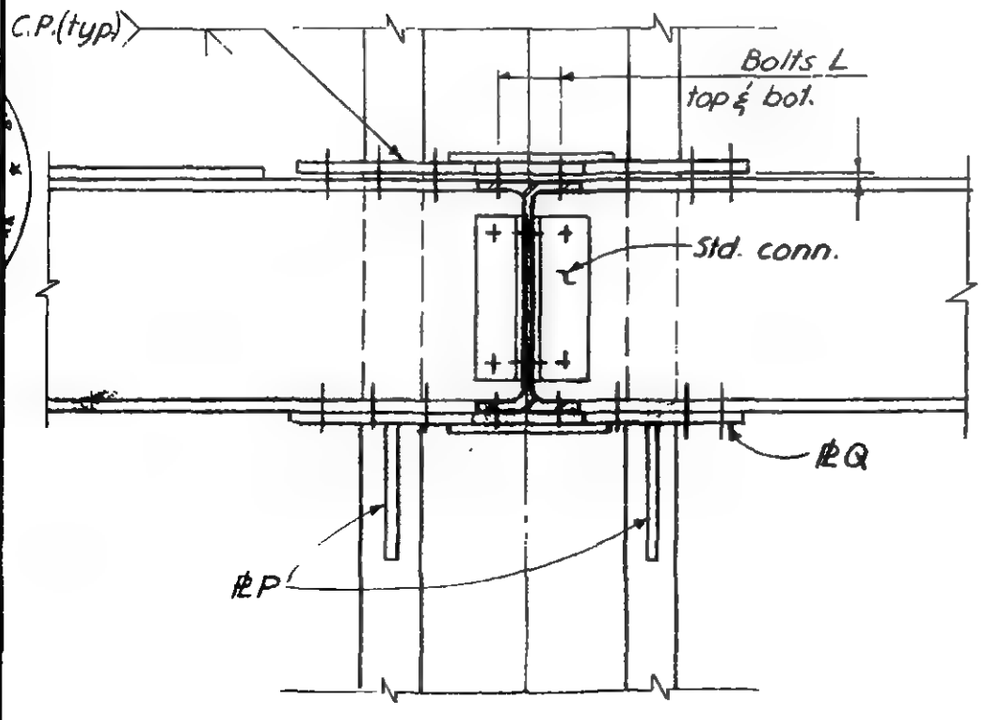

Section a-a

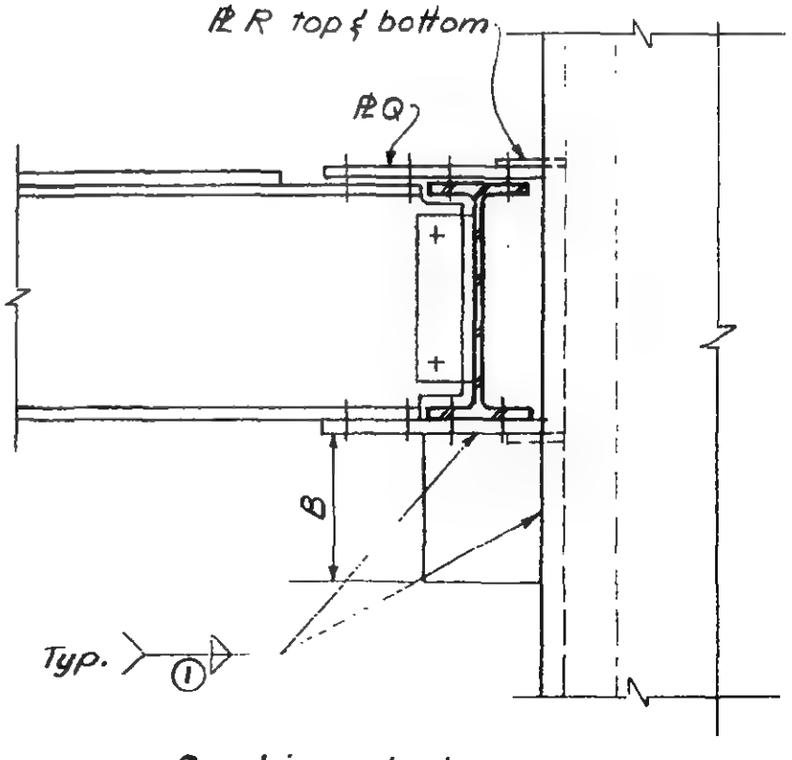

Section b-b

LICENSED PROFESSIONAL ENGINEER
LESLIE E. ROBERTSON
No. 34360
UNIVERSITY OF THE STATE OF NEW YORK

6-ABI-211.1

WORTHINGTON, SKILLING, HELLE & JACKSON — Civil & Structural Engineers

PROJECT THE WORLD TRADE CENTER | TITLE CONNECTION DETAIL 706 | DATE 6-12-67

REVISIONS

6-30-67

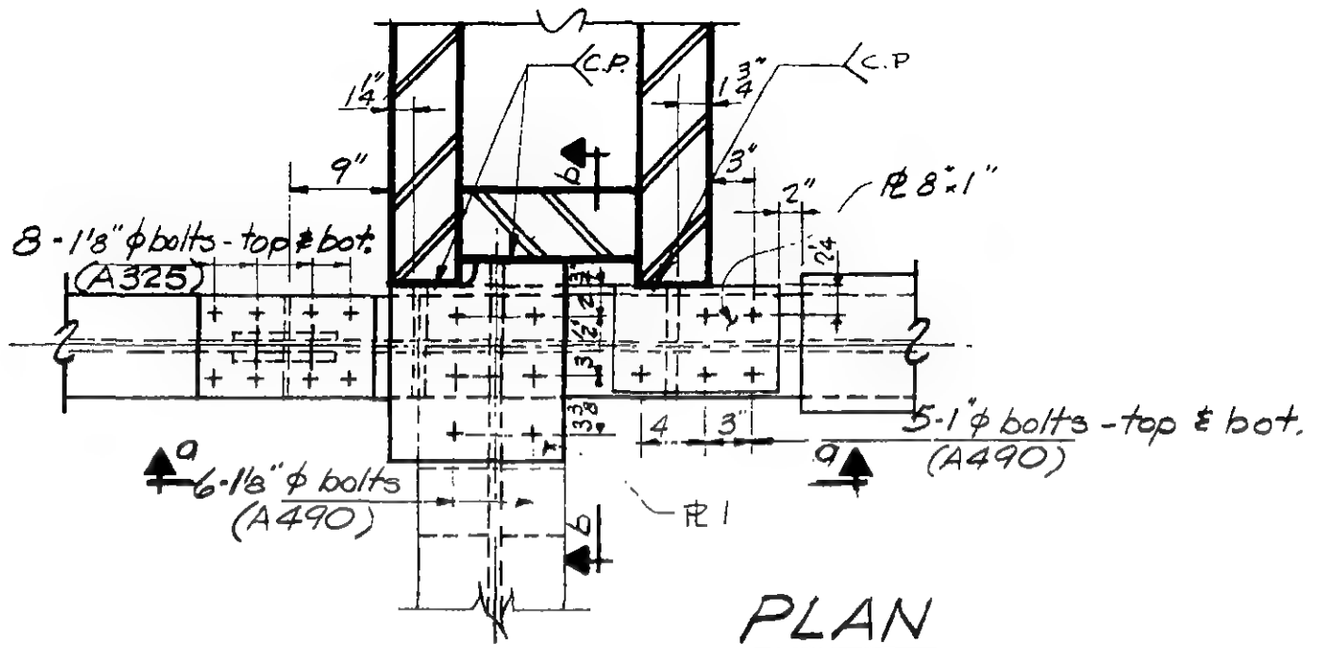

PLAN

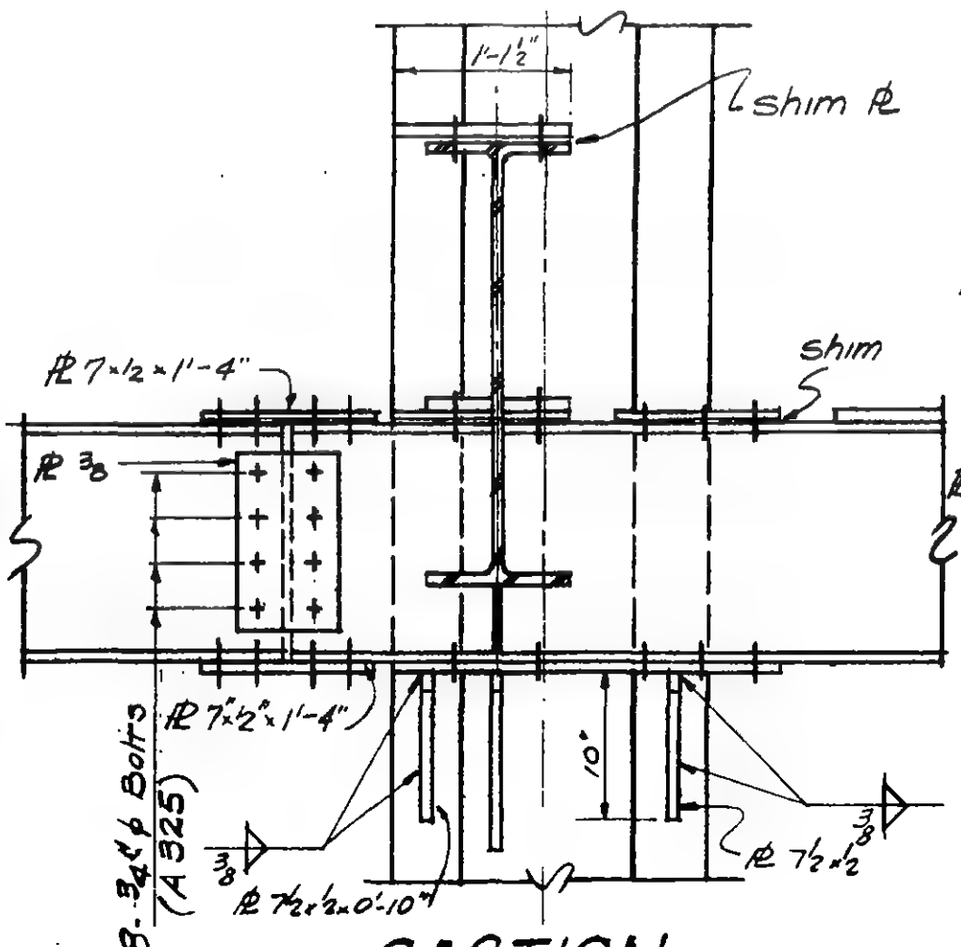

SECTION a-a

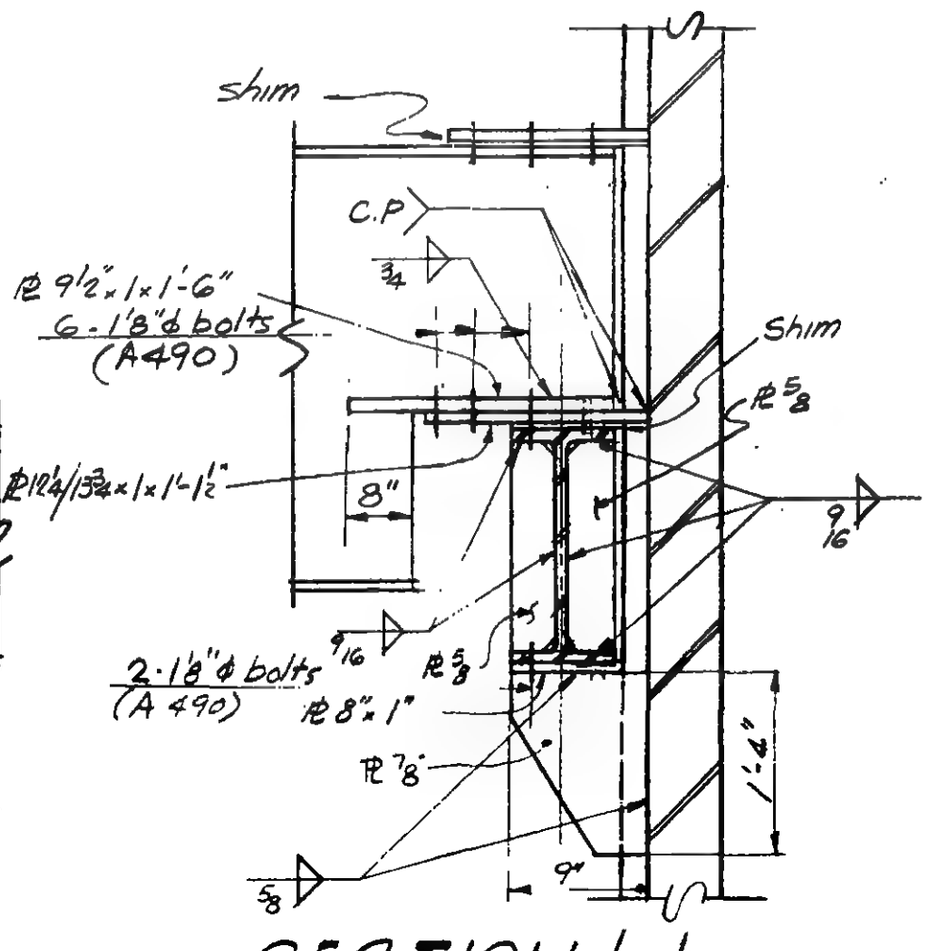

SECTION b-b

LICENSED PROFESSIONAL ENGINEER — LESLIE E. ROBERTSON — No. 34360 — UNIVERSITY OF THE STATE OF NEW YORK

6-AB1-212

WORTHINGTON, SKILLING, HELLE & JACKSON Civil & Structural Engineers

PROJECT THE WORLD TRADE CENTER | TITLE CONNECTION DETAIL 707 | DATE 6-12-67

REVISIONS

6-30-67

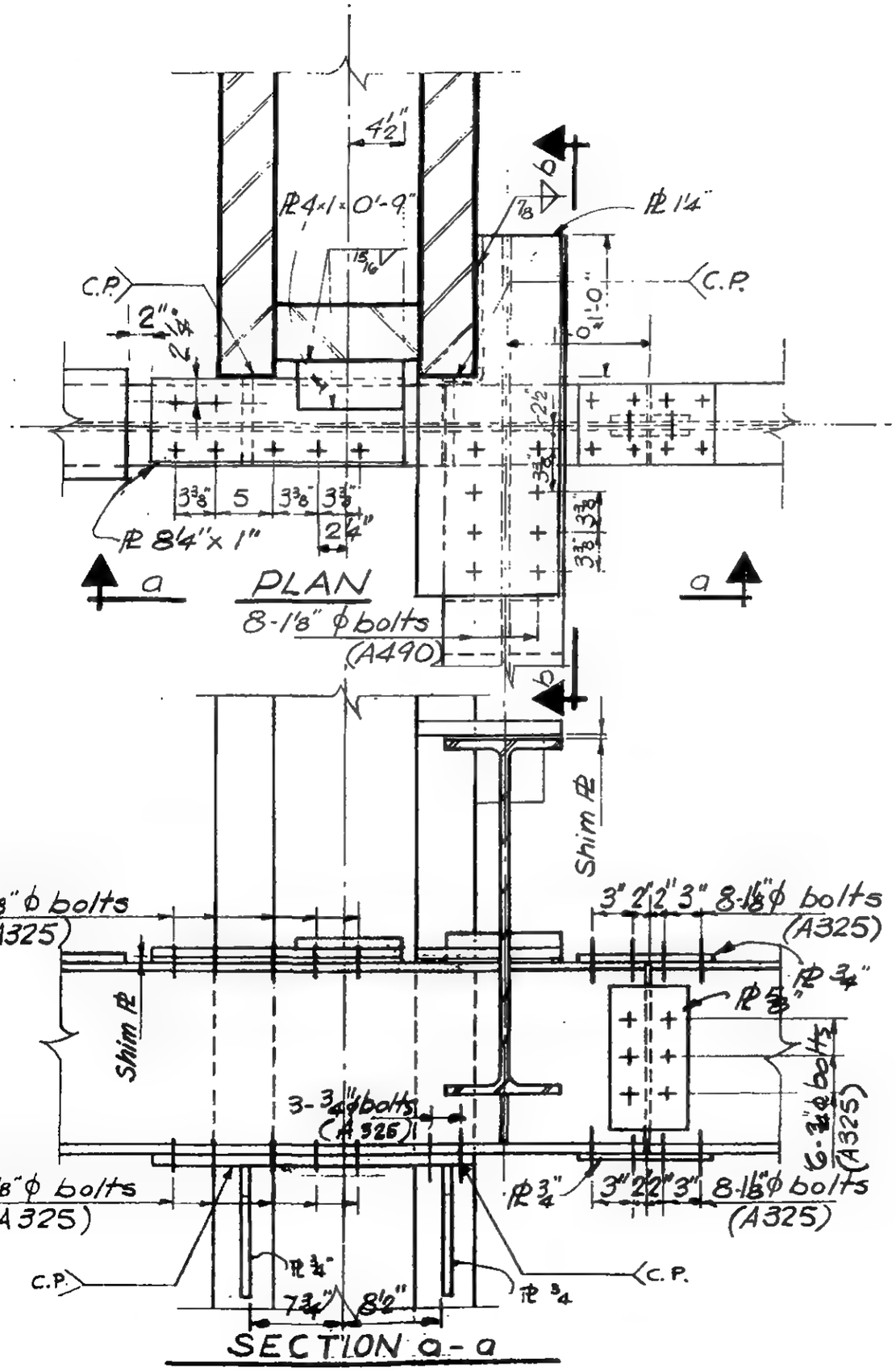

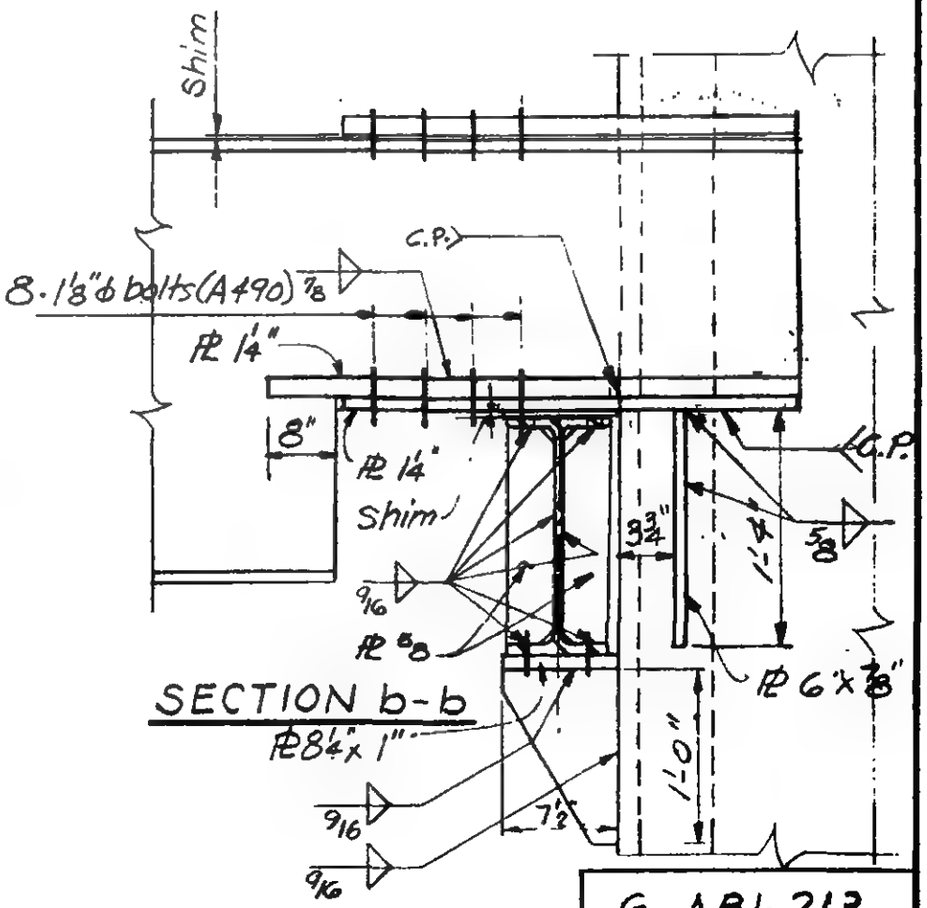

LICENSED PROFESSIONAL ENGINEER
LESLIE E. ROBERTSON
No. 34360
UNIVERSITY OF THE STATE OF NEW YORK

6-ABI-213

WORTHINGTON, SKILLING, HELLE & JACKSON — Civil & Structural Engineers

PROJECT THE WORLD TRADE CENTER | TITLE CONNECTION DETAIL 707 | DATE 6-12-67

REVISIONS

6-30-67

11-17-67

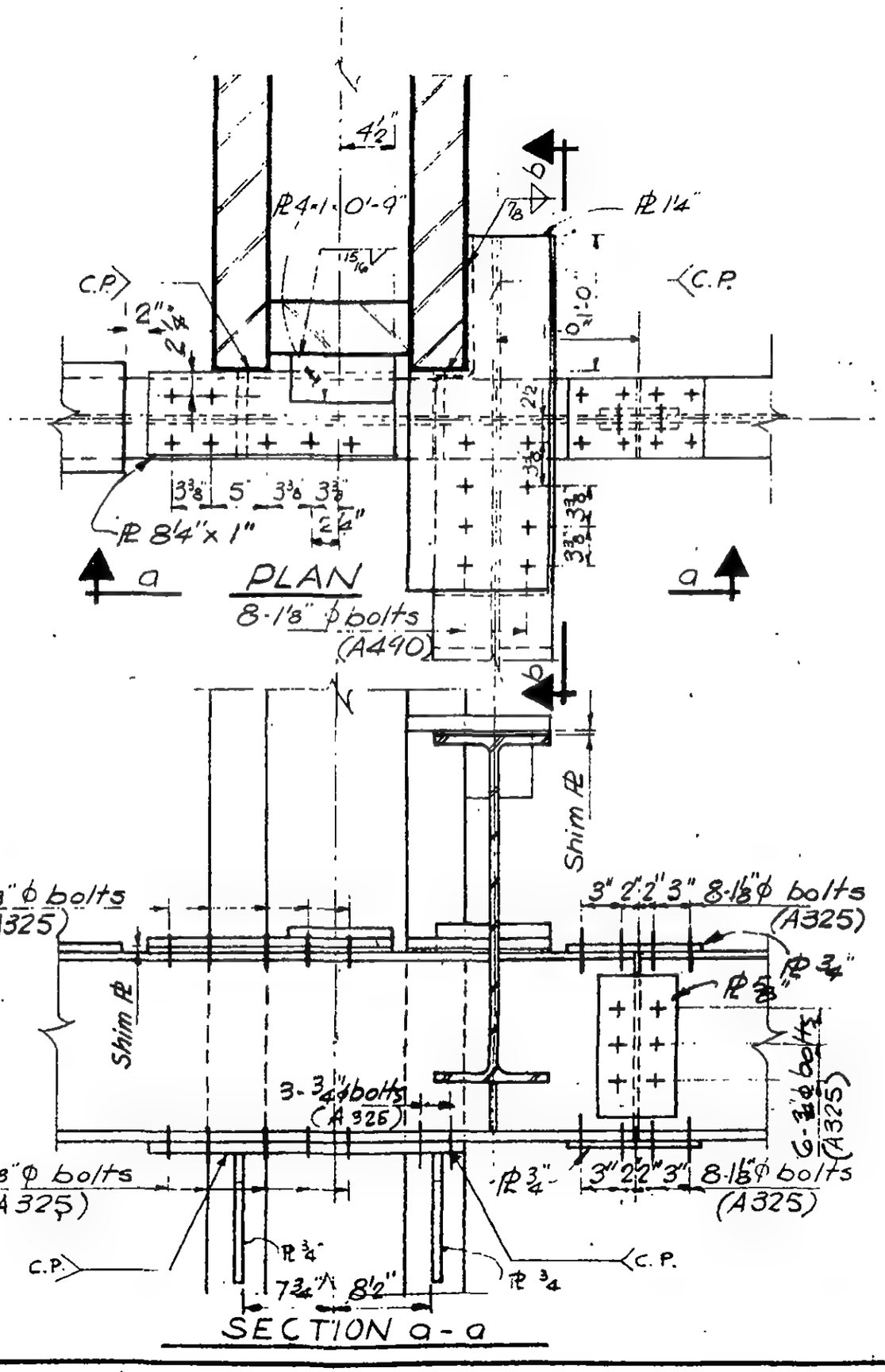

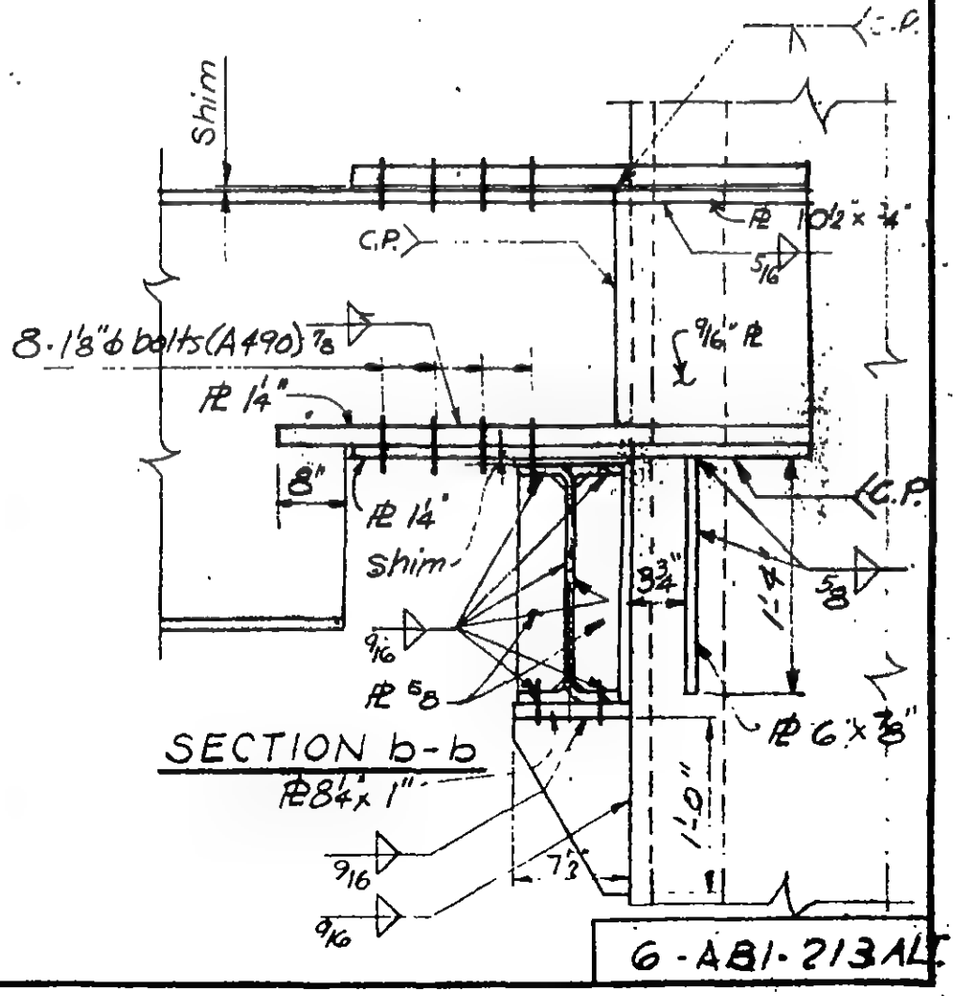

LICENSED PROFESSIONAL ENGINEER — LESLIE E. ROBERTSON — No. 34360 — UNIVERSITY OF THE STATE OF NEW YORK

6-AB1-213AL

WORTHINGTON, SKILLING, HELLE & JACKSON — Civil & Structural Engineers

PROJECT: THE WORLD TRADE CENTER | TITLE: CONNECTION DETAIL 708 | DATE: 6-12-67

REVISIONS

6-30.67

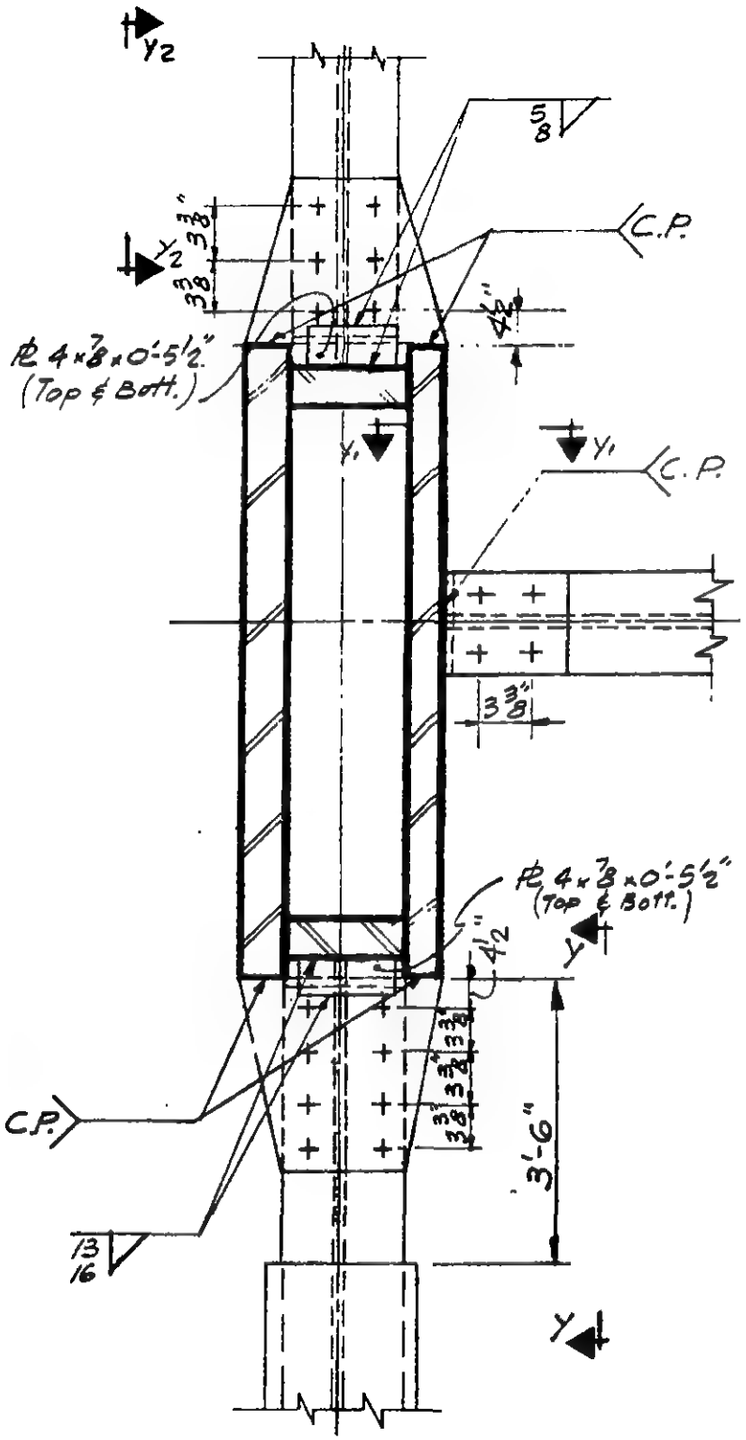

Plan

For SECTIONS Y-Y, Y1-Y1, Y2-Y2
See Dwg. 6-ABI-234

	SECTION Y-Y	SECTION Y1-Y1	SECTION Y2-Y2
PLATES			
PL P	8" x ¾"	5" x 5/8"	5" x 5/8"
PL Q	Same as PL R	7" x ¾"	Same as PL 2
PL R	7/8"		7/8"
DIMENSIONS			
A	2'-2½"	0'-10"	2'-2½"
B	1'-2"	0'-9"	0'-9"
BOLTS			
K	8-1⅛"ϕ(A490)	4-1⅛"ϕ(A325)	6-1⅛"ϕ(A490)
L	8-1⅛"ϕ(A490)	4-1⅛"ϕ(A325)	6-1⅛"ϕ(A490)
WELDS			
①	9/16	7/16	7/16
②	9/16	7/16	7/16
③	C.P.	C.P.	C.P.
⑤	13/16	—	5/8
⑥	13/16	—	5/8

LICENSED PROFESSIONAL ENGINEER — LESLIE E. ROBERTSON — No. 34360 — UNIVERSITY OF THE STATE OF NEW YORK

6-ABI-214

WORTHINGTON, SKILLING, HELLE & JACKSON — Civil & Structural Engineers

PROJECT: THE WORLD TRADE CENTER | TITLE: CONNECTION DETAIL 709, 709A, 709B | DATE: 6-12-67

REVISIONS
6-30-67
2-9-68

For SECTIONS Z-Z, Z_1-Z_1, Z_2-Z_2 & y-y
See Dwg. 6-ABI-234

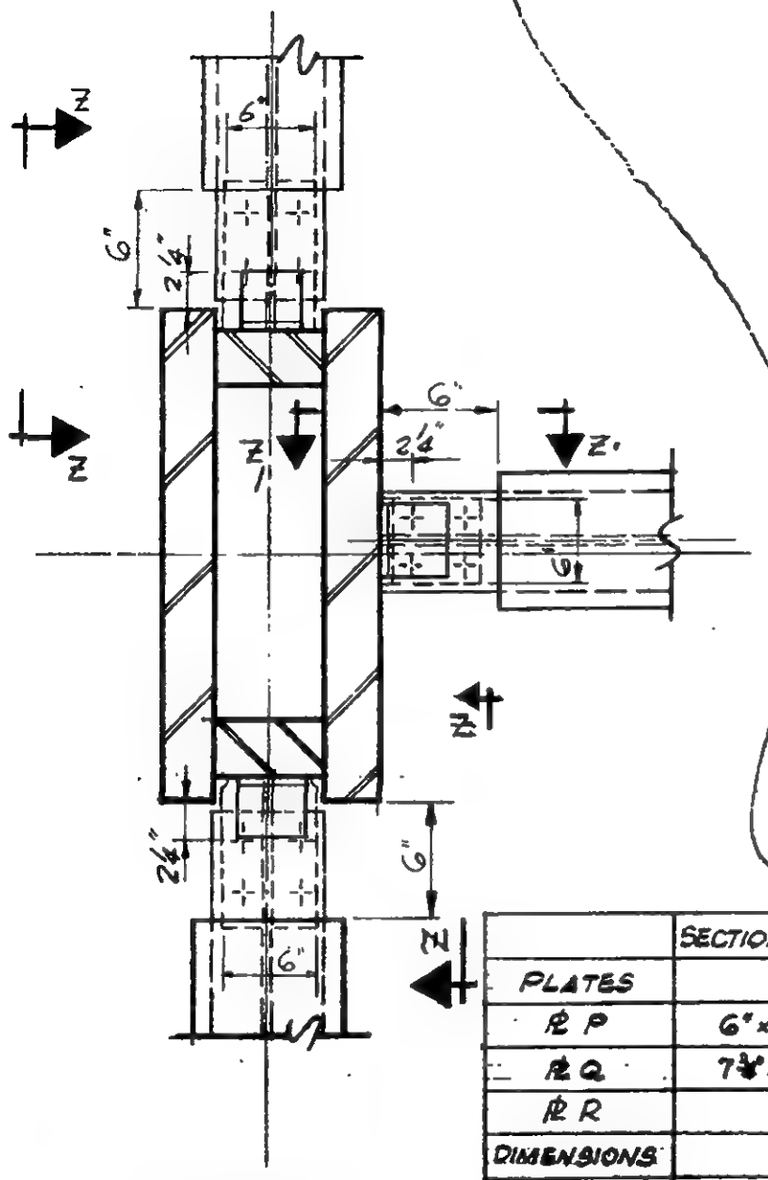

PLAN
DET. 709

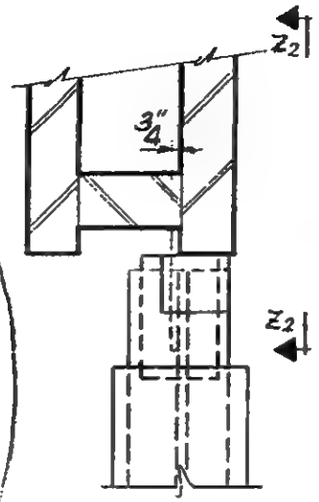

PLAN
DET. 709A
Remainder of plan same as Det. 709

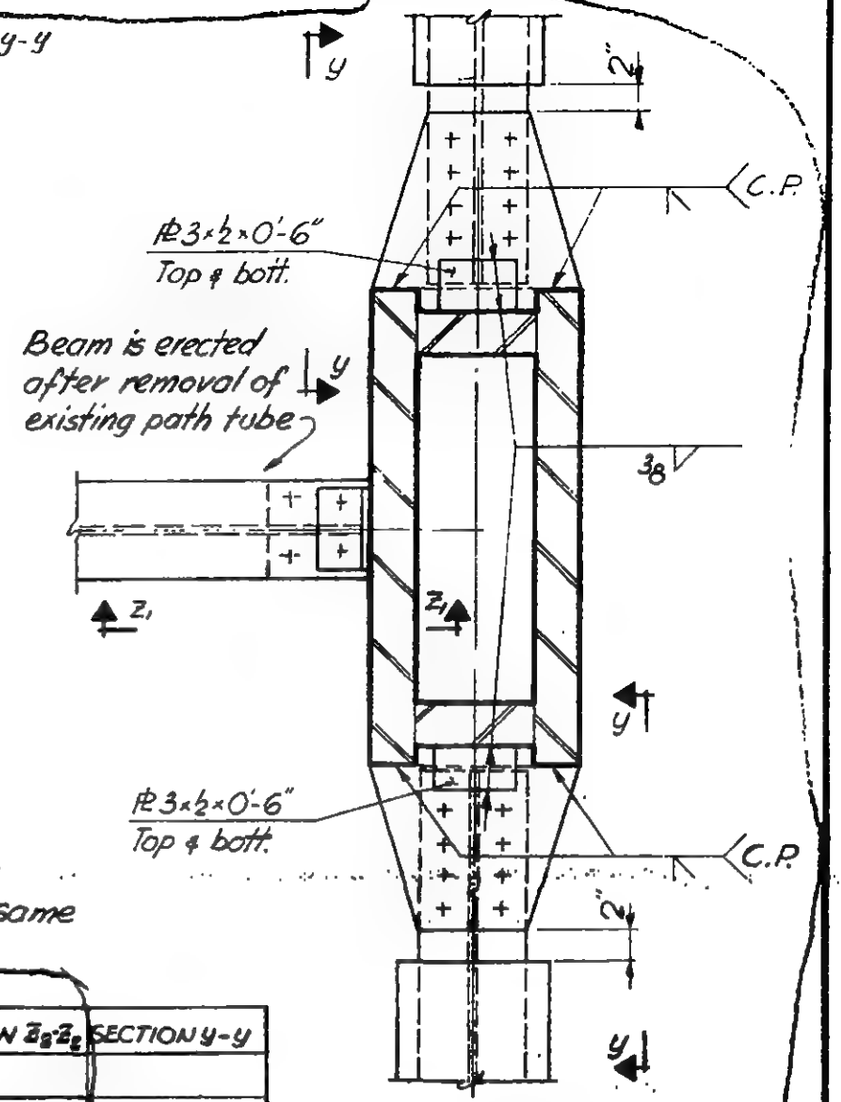

PLAN
DET. 709B
Remainder of plan same as Det. 709

	SECTION Z-Z	SECTION Z_1-Z_1	SECTION Z_2-Z_2	SECTION y-y
PLATES				
PL P	6"×5/8"	6"×5/8"	8"×3/4"	6"×5/8"
PL Q	7¾"×5/8"	6¼"×5/8"	6½"×3/4"	14"×5/8"
PL R				14×5/8"
DIMENSIONS				
B	1'-0"	1'-0"	1'-0"	1'-0"
BOLTS				
L	4-¾"ϕ (A325)	4-¾"ϕ (A325)	4-¾"ϕ (A325)	8-1"ϕ
K	—	—	—	8-1"ϕ
WELDS				
①	½	½	9/16	½
②	½	½	9/16	½
③	—	—	C.P.	C.P.
④	9/16	9/16	—	

LICENSED PROFESSIONAL ENGINEER
LESLIE E. ROBERTSON
No. 34360
UNIVERSITY OF THE STATE OF NEW YORK

6-ABI-215

SKILLING - HELLE - CHRISTIANSEN - ROBERTSON Structural & Civil Engineers

PROJECT THE WORLD TRADE CENTER | TITLE CONNECTION DETAIL 709C, 709D | DATE 2-9-68

REVISIONS

All Details not shown
same as Det. 709, 6-ABI-215.

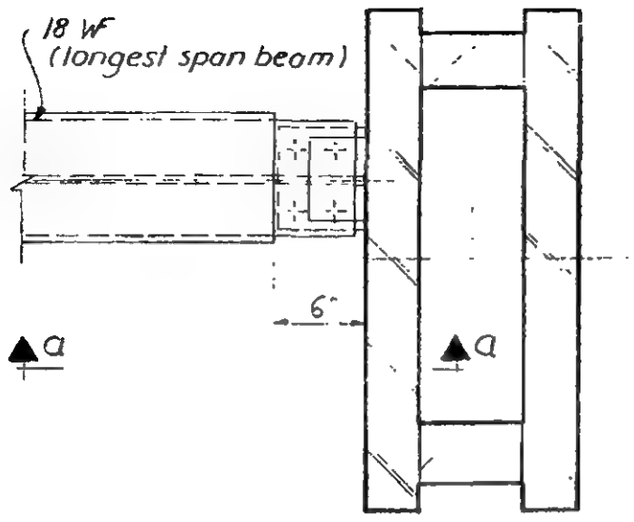

Plan

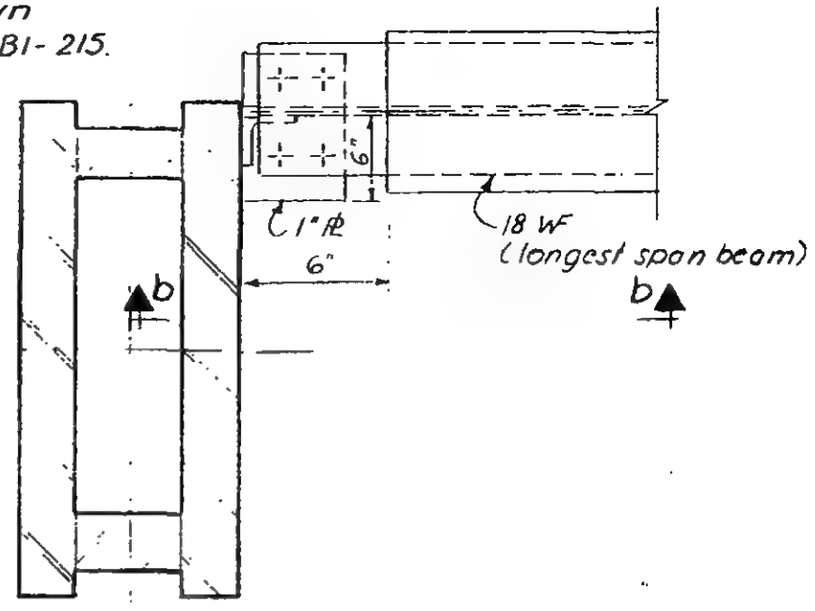

Plan

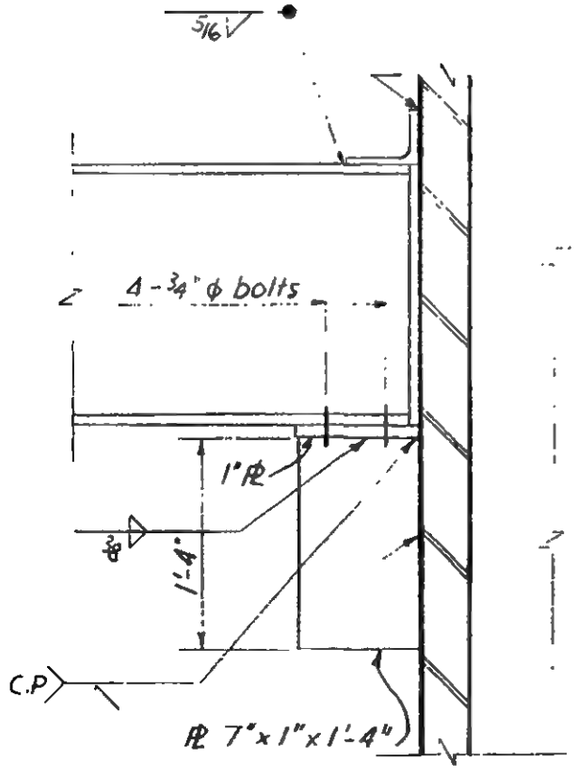

Section a-a

Detail 709C

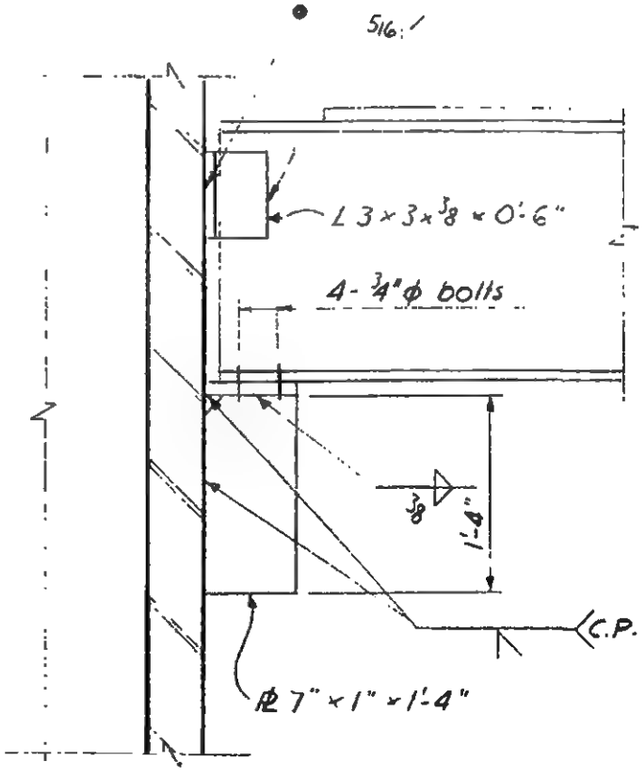

Section b-b

Detail 709D

6-ABI-215.1

LICENSED PROFESSIONAL ENGINEER
LESLIE E. ROBERTSON
No. 34360
UNIVERSITY OF THE STATE OF NEW YORK

WORTHINGTON, SKILLING, HELLE & JACKSON — Civil & Structural Engineers

PROJECT THE WORLD TRADE CENTER | TITLE CONNECTION DETAIL 710 | DATE 6-12-67

REVISIONS

6-30-67

For SECTIONS Z-Z & Z1-Z1
See Dwg. G-AB1-234

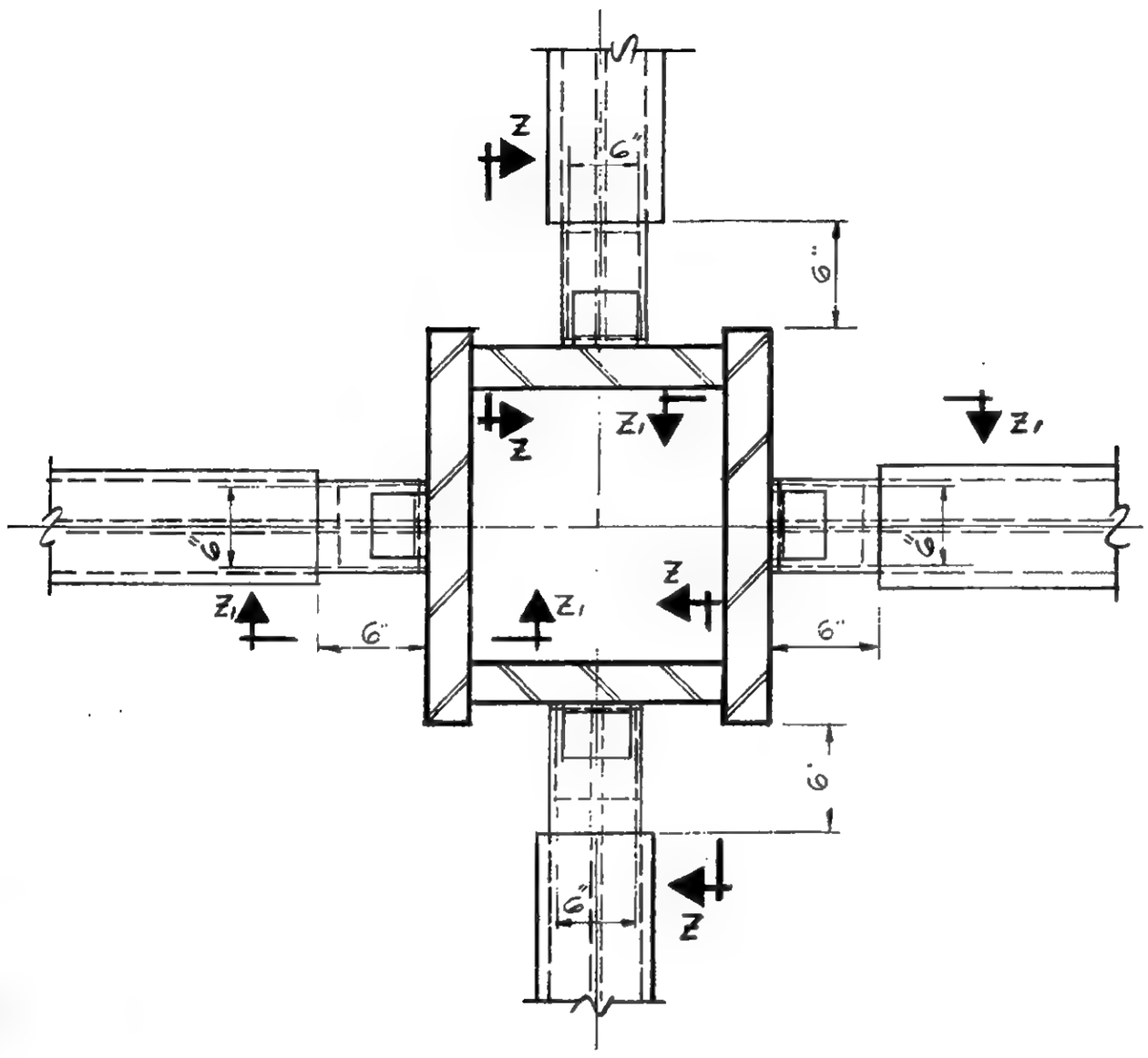

PLAN

	SECTION Z-Z	SECTION Z1-Z1
PLATES		
ℛ P	6" x 5/8"	6" x 5/8"
ℛ Q	6 1/4" x 5/8"	6 1/4" x 5/8"
DIMENSIONS		
A	1'-3 3/4"	1'-3 1/4"
B	0'-10"	1'-0"
BOLTS		
L	4-3/4" ϕ (A325)	4-3/4" ϕ (A325)
WELDS		
①	1/2	1/2
②	1/2	1/2
④	7/16	7/16

LICENSED PROFESSIONAL ENGINEER
LESLIE E. ROBERTSON
No. 34360
UNIVERSITY OF THE STATE OF NEW YORK

6-AB1-216

SKILLING - HELLE - CHRISTIANSEN - ROBERTSON Structural & Civil Engineers

PROJECT THE WORLD TRADE CENTER | TITLE CONNECTION DETAIL 710 A | DATE 2-9-68

REVISIONS

For sections y-y, y₁-y₁, z-z
See 6-ABI-234

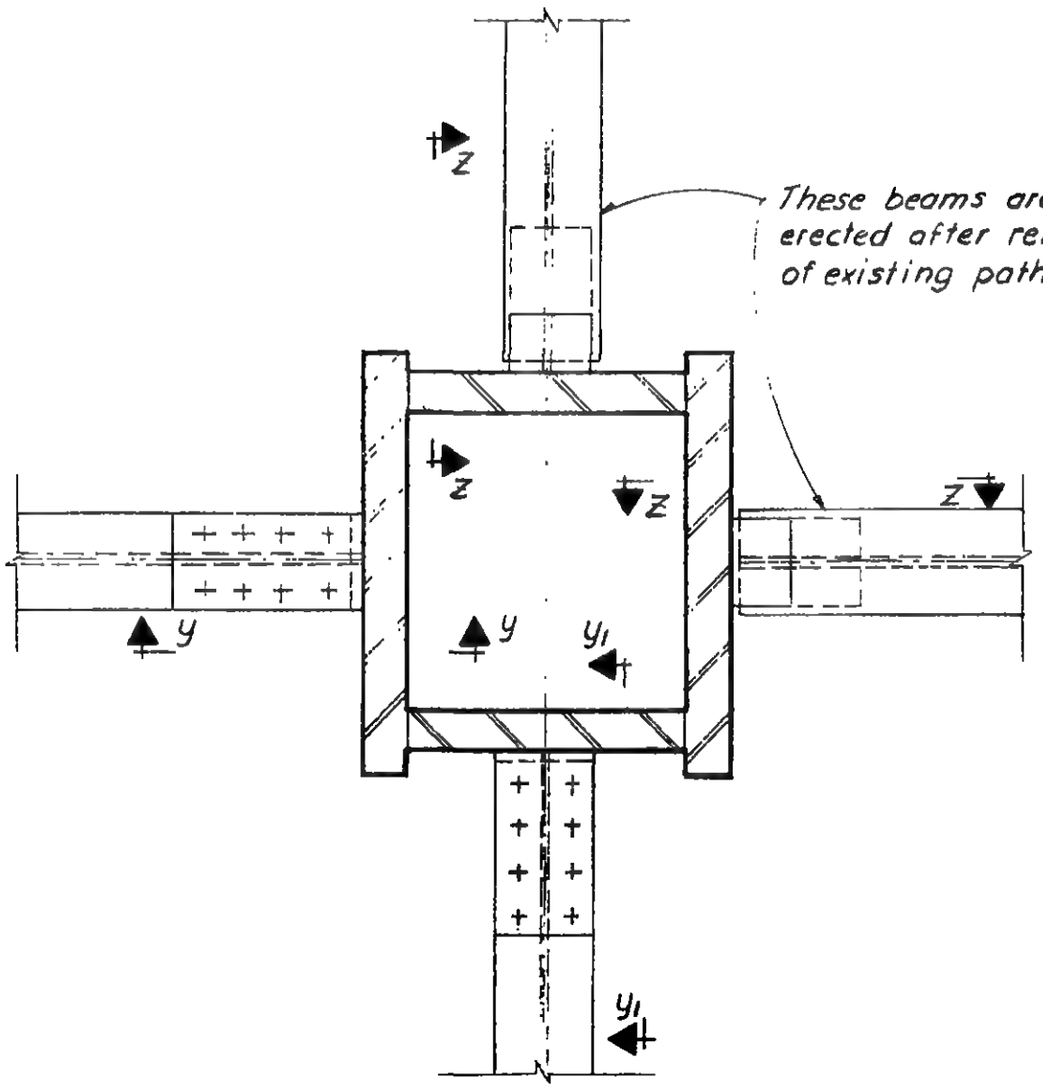

	Section y-y	Section y₁-y₁	Section z-z
PLATES			
PL P	6" × 5/8"	6" × 5/8"	6" × 5/8"
PL Q	7" × 3/4"	7" × 3/4"	7" × 5/8"
PL R	7" × 1/4"	7" × 3/4"	—
DIMENSIONS			
B	1'-2"	0'-10"	1'-0"
BOLTS			
K	8-7/8" ϕ	8-7/8" ϕ	—
L	8-7/8" ϕ	8-7/8" ϕ	4-3/4" ϕ
WELDS			
1	1/2	1/2	1/2
2	1/2	1/2	1/2
3	C.P.	C.P.	—
4	—	—	7/16

LICENSED PROFESSIONAL ENGINEER
LESLIE E. ROBERTSON
No. 34360
UNIVERSITY OF THE STATE OF NEW YORK

6-ABI-216.1

WORTHINGTON, SKILLING, HELLE & JACKSON — Civil & Structural Engineers

PROJECT THE WORLD TRADE CENTER | TITLE CONNECTION DETAIL 711, 711A | DATE 6-12-67

REVISIONS

6-30-67

For section Z-Z, Z_1-Z_1, Z_2-Z_2 see dwg. 6-AB1-234

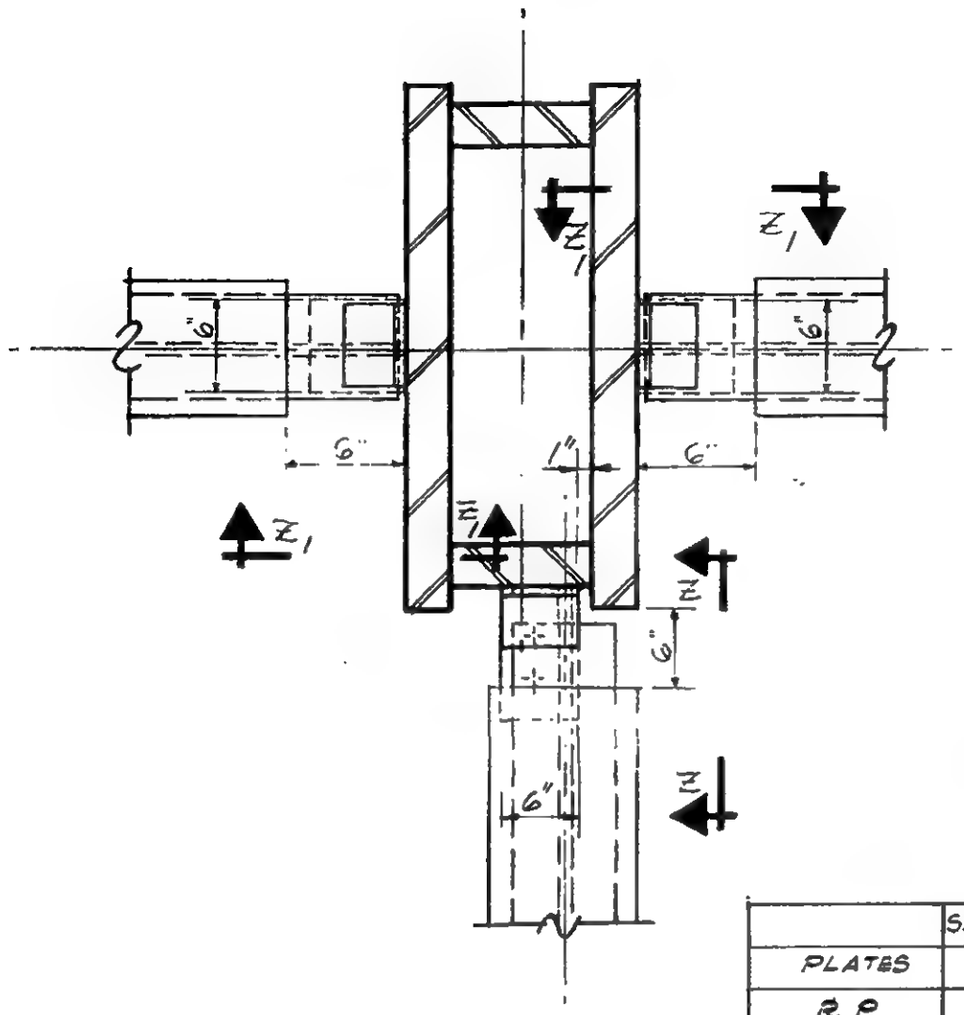

PLAN
DET. 711

	SECTION Z-Z	SECTION Z_1-Z_1	SECTION Z_2-Z_2
PLATES			
R P	6" x 3/8"	8" x 5/8"	5½" x 3/8"
R Q	9½" x 3/8"	8" x 5/8"	6¼" x 3/8"
DIMENSIONS			
A	1'-8 3/8"	0'-10 1/4"	1'-8 3/4"
B	0'-11"	1'-1"	0'-8"
BOLTS			
L	7-1"ϕ (A-325)	4-3/8"ϕ (A-325)	4-3/4"ϕ (A325)
WELDS			
①	1/4	1/2	1/4
②	1/4	1/2	1/4
③	—	—	C.P
④	—	7/16	—
⑤	1/4	—	—

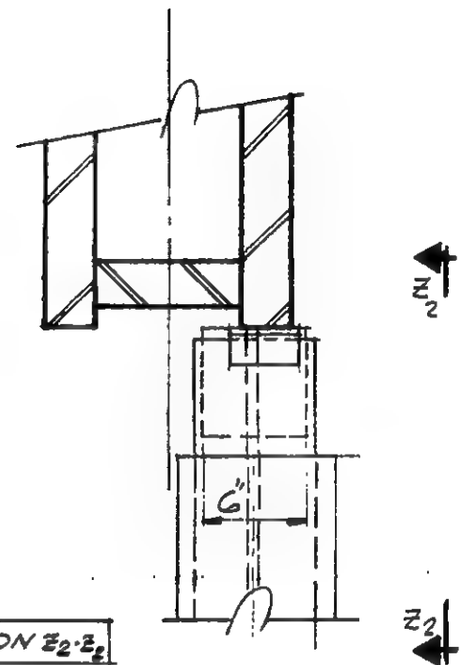

PLAN
DET. 711A

Remainder of plan same as detail 711

LICENSED PROFESSIONAL ENGINEER
LESLIE E. ROBERTSON
No. 34360
UNIVERSITY OF THE STATE OF NEW YORK

6-AB1-217

SKILLING - HELLE - CHRISTIANSEN - ROBERTSON Structural & Civil Engineers

PROJECT THE WORLD TRADE CENTER | TITLE CONNECTION DETAIL 711 B, C | DATE 2-9-68

REVISIONS

	Section y-y	Section y_1-y_1	Section z-z	Section z_1-z_1
PLATES				
PL P	8" × 5/8"	5 1/2" × 5/8"	8" × 5/8"	5 1/2" × 5/8"
PL Q	3/4"	3/4"	5/8"	5/8"
PL R	3/4"	3/4"	—	—
DIMENSIONS				
B	1'-1"	0'-11"	1'-1"	0'-11"
BOLTS				
K	8-7/8" ϕ	8-7/8" ϕ	—	—
L	8-7/8" ϕ	8-7/8" ϕ	4-3/4" ϕ	4-3/4" ϕ
WELDS				
1	1/2	1/2	1/2	1/2
2	1/2	1/2	1/2	1/2
3	C.P.	C.P.	C.P.	C.P.

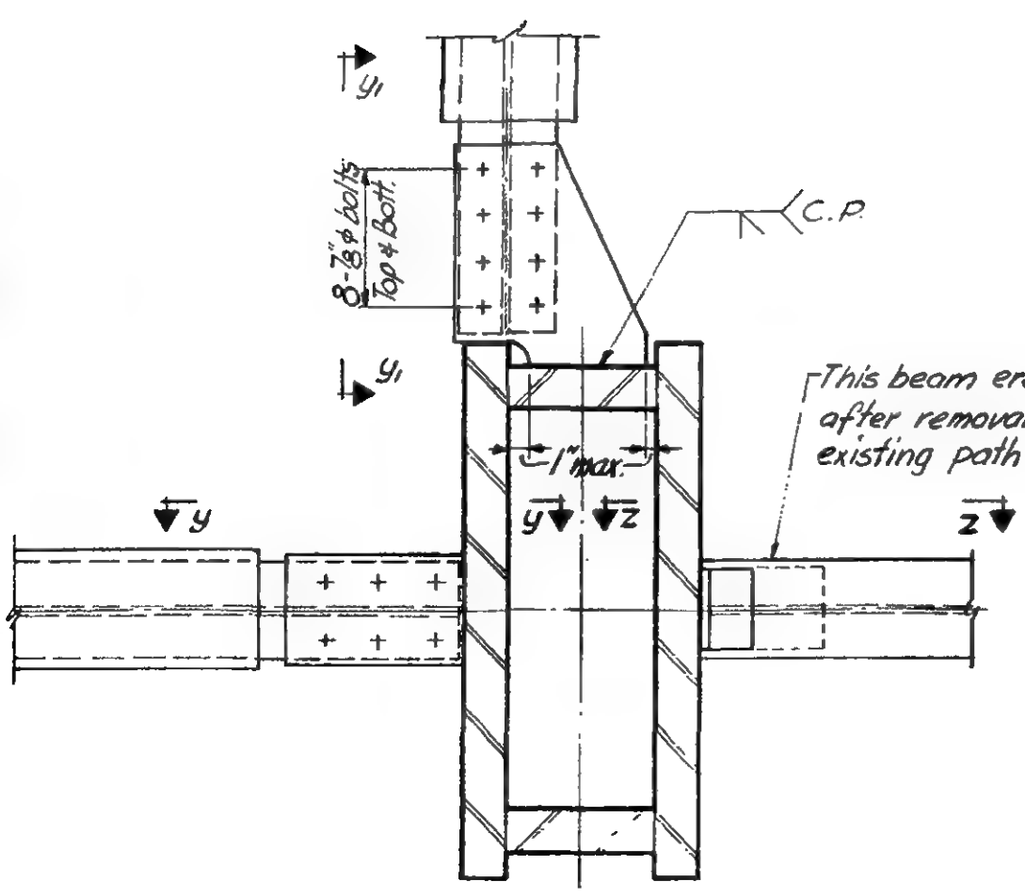

711 B

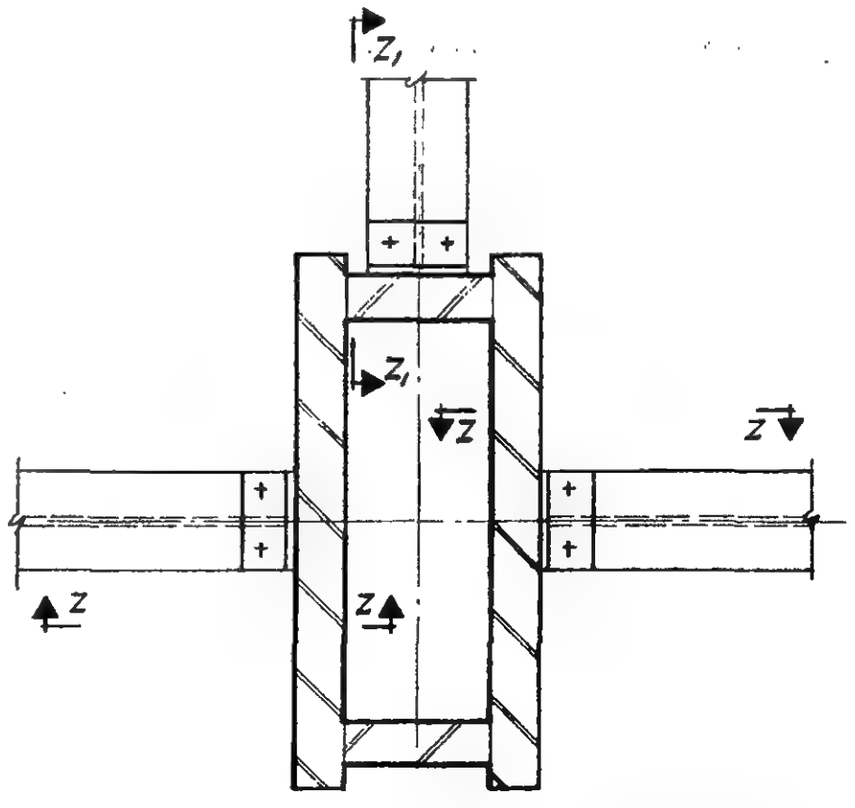

711 C

6-AB1-217.1

LESLIE E. ROBERTSON No. 34360 STATE OF NEW YORK

WORTHINGTON, SKILLING, HELLE & JACKSON — Civil & Structural Engineers

PROJECT THE WORLD TRADE CENTER | TITLE CONNECTION DETAIL 712 | DATE 6-12-67

REVISIONS

6-30-67
7-17-68

For SECTION X-X, Y-Y
See dwg. 6-AB1-234

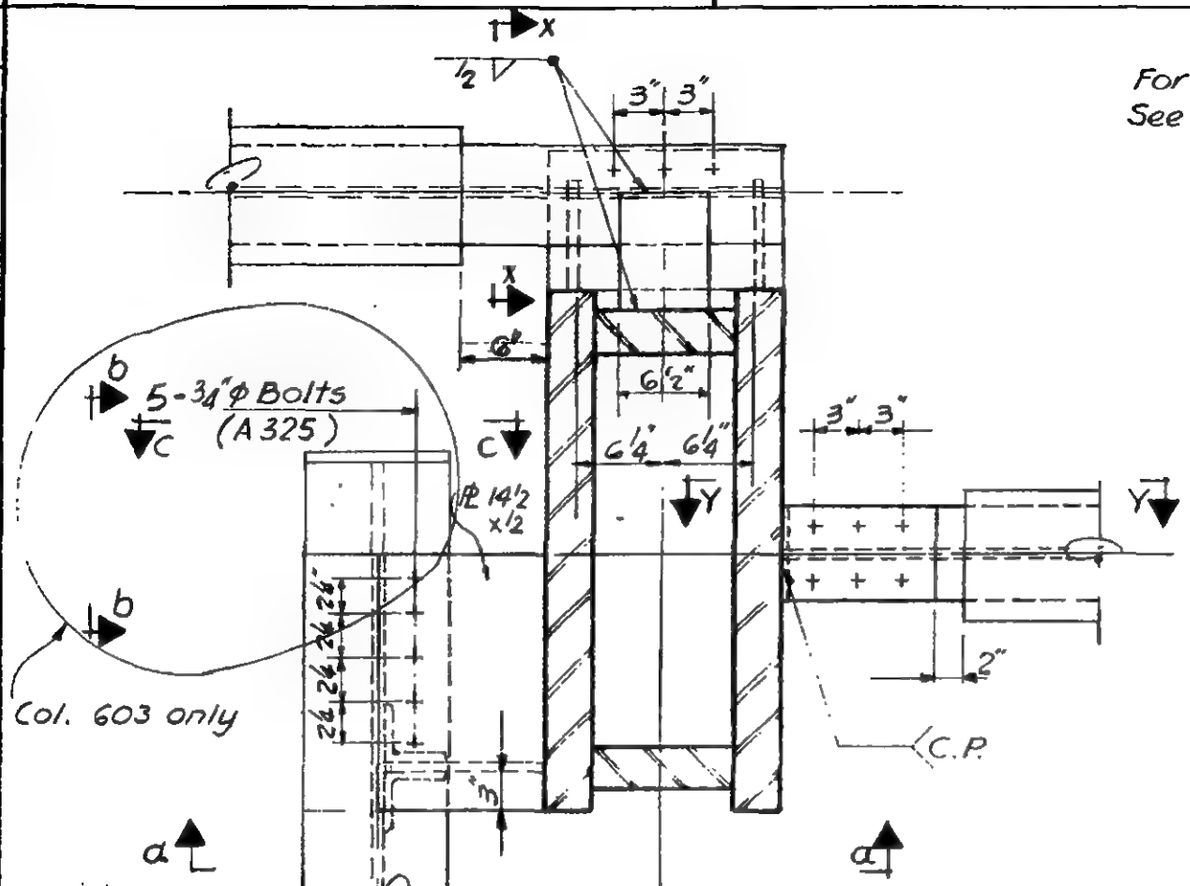

	SECTION X-X	SECTION Y-Y
PLATES		
PL P	2 PLs 7" x ⅝"	6" x ⅝"
PL Q	10½" x ⅝" x 1'-4"	7" x ¾"
PL R	8" x ⅝"	7" x ¾"
DIMENSIONS		
A	2'-2¼"	0'-10¾"
B	1'-0"	1'-0"
BOLTS		
K	—	6-1"φ (A490)
L	3-1"φ (A325)	6-1"φ (A490)
WELDS		
①	7/16	½
②	7/16	½
③	—	C.P.
⑦	½	—

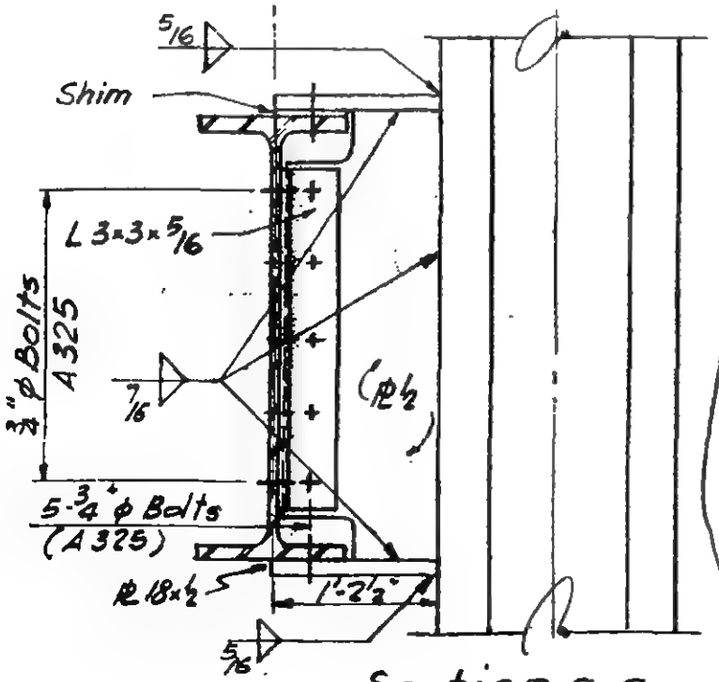

Section a-a

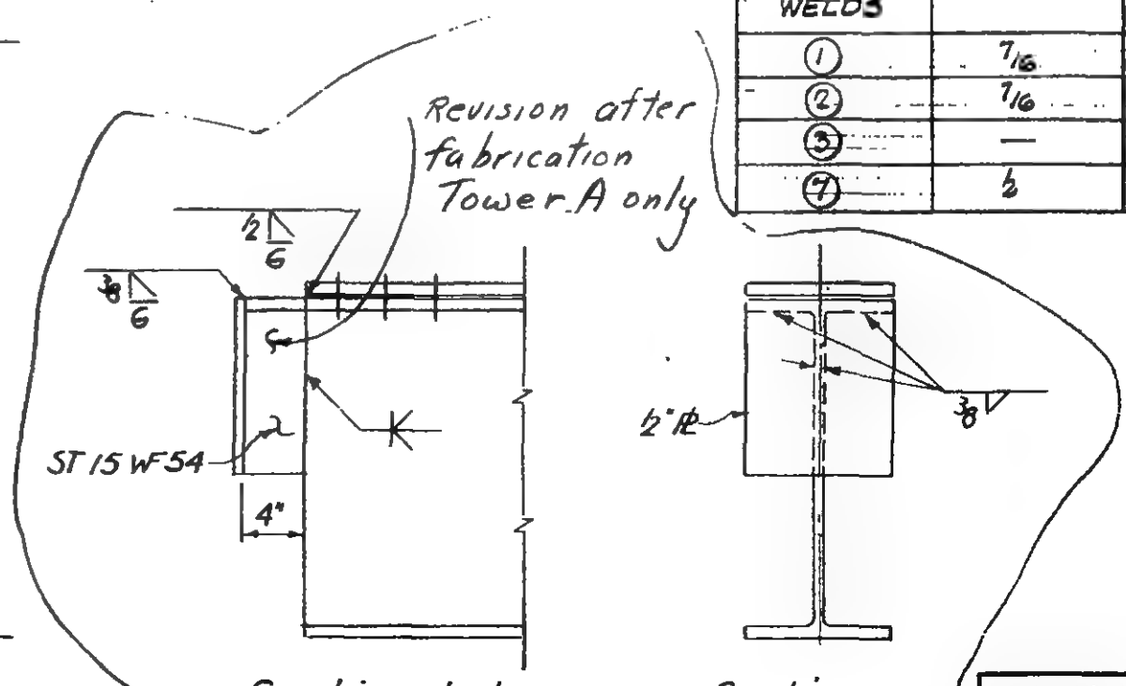

Section b-b

Section c-c

6-AB1-218

LICENSED PROFESSIONAL ENGINEER
LESLIE E. ROBERTSON
No. 34360
UNIVERSITY OF THE STATE OF NEW YORK

WORTHINGTON, SKILLING, HELLE & JACKSON — Civil & Structural Engineers

PROJECT: THE WORLD TRADE CENTER | TITLE: CONNECTION DETAIL 713, 713A | DATE: 6-12-67

REVISIONS

6-30-67

10-7-68

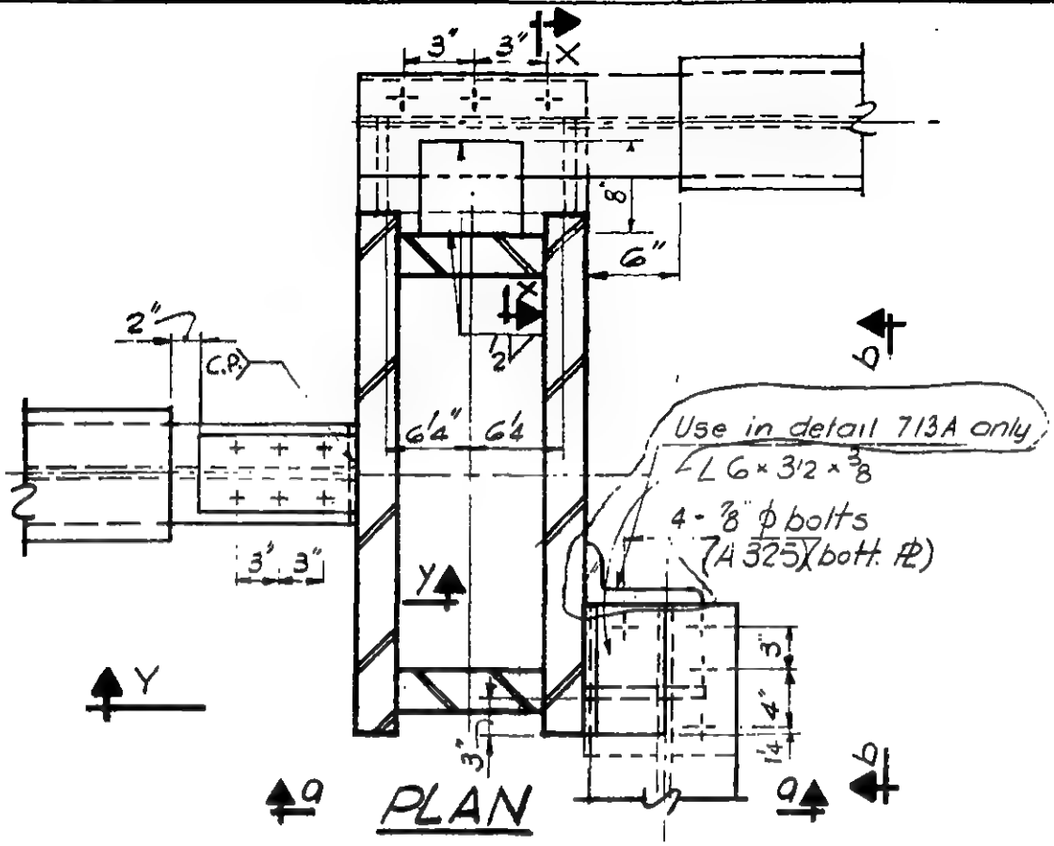

For SECTION X-X, Y-Y see dwg. 6-ABI-234

	SECTION X-X	SECTION Y-Y
PLATES		
Rt P	2 Rts - 7" x ⅝"	6" x ⅝" x 1'-0"
Rt Q	10" x ⅝" x 1'-4"	7" x ¾"
Rt R	6½" x ⅝"	7" x ¾"
DIMENSIONS		
A	2'-1¾"	0'-10¾"
B	1'-0"	1'-0"
BOLTS		
K	—	6-1" ϕ (A490)
L	3-1" ϕ (A325)	6-1" ϕ (A490)
WELDS		
①	7/16	½
②	7/16	½
③	—	C.P.
⑦	½	—

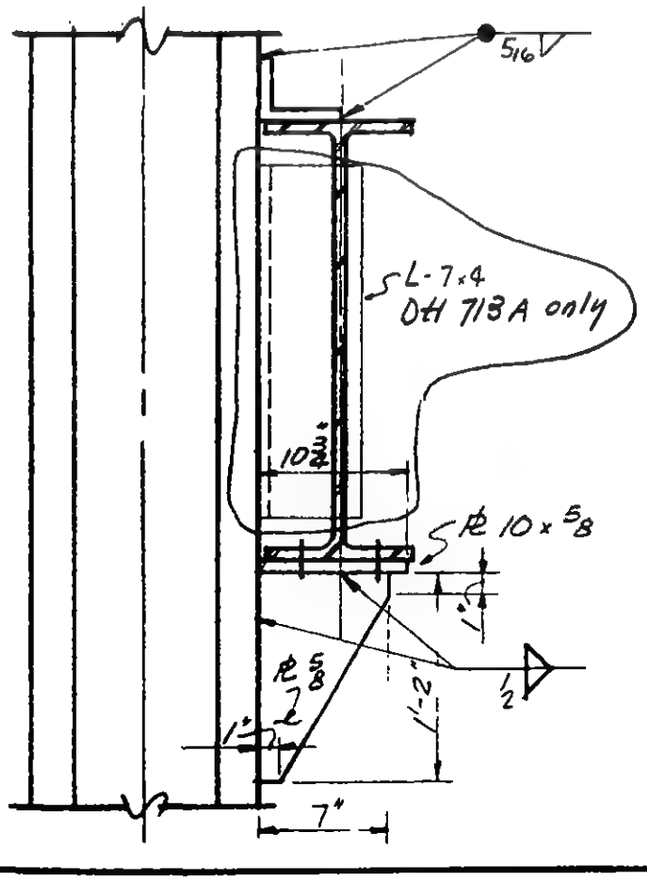

SECTION a-a

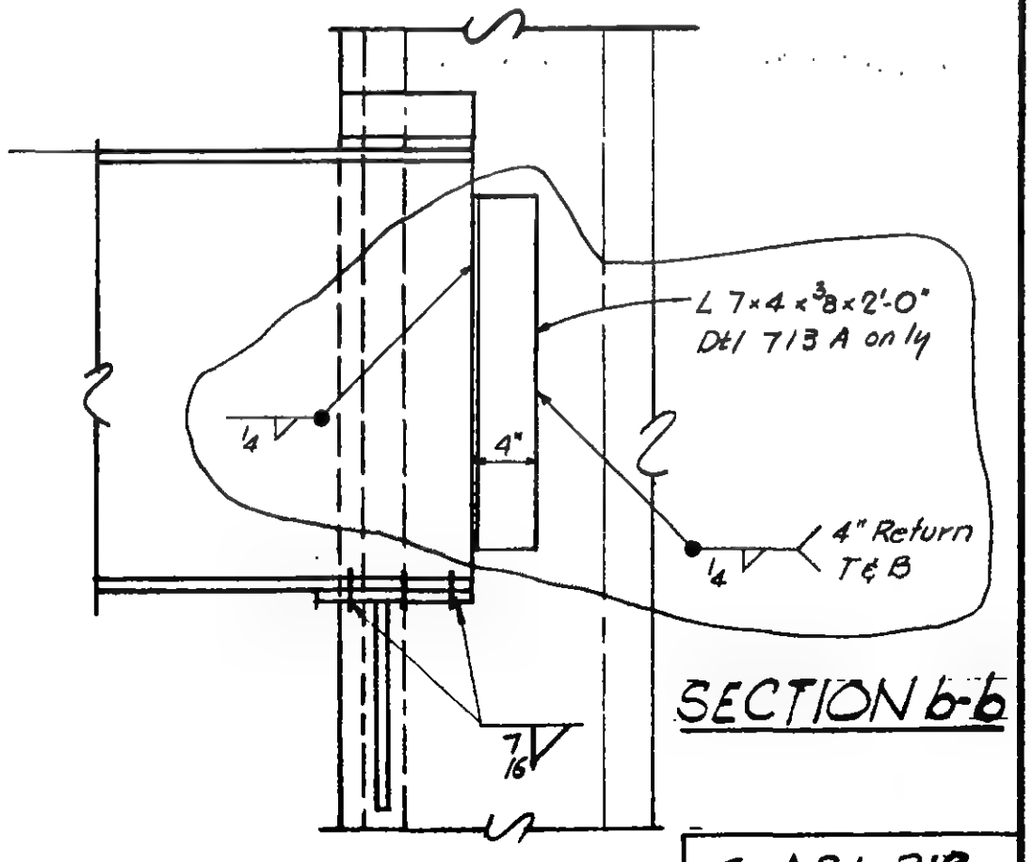

SECTION b-b

LICENSED PROFESSIONAL ENGINEER
LESLIE E. ROBERTSON
No. 34360
UNIVERSITY OF THE STATE OF NEW YORK

6-ABI-219

WORTHINGTON, SKILLING, HELLE & JACKSON — Civil & Structural Engineers

PROJECT: THE WORLD TRADE CENTER | TITLE: CONNECTION DETAIL 714 | DATE: 6-12-67

REVISIONS

6-30-67

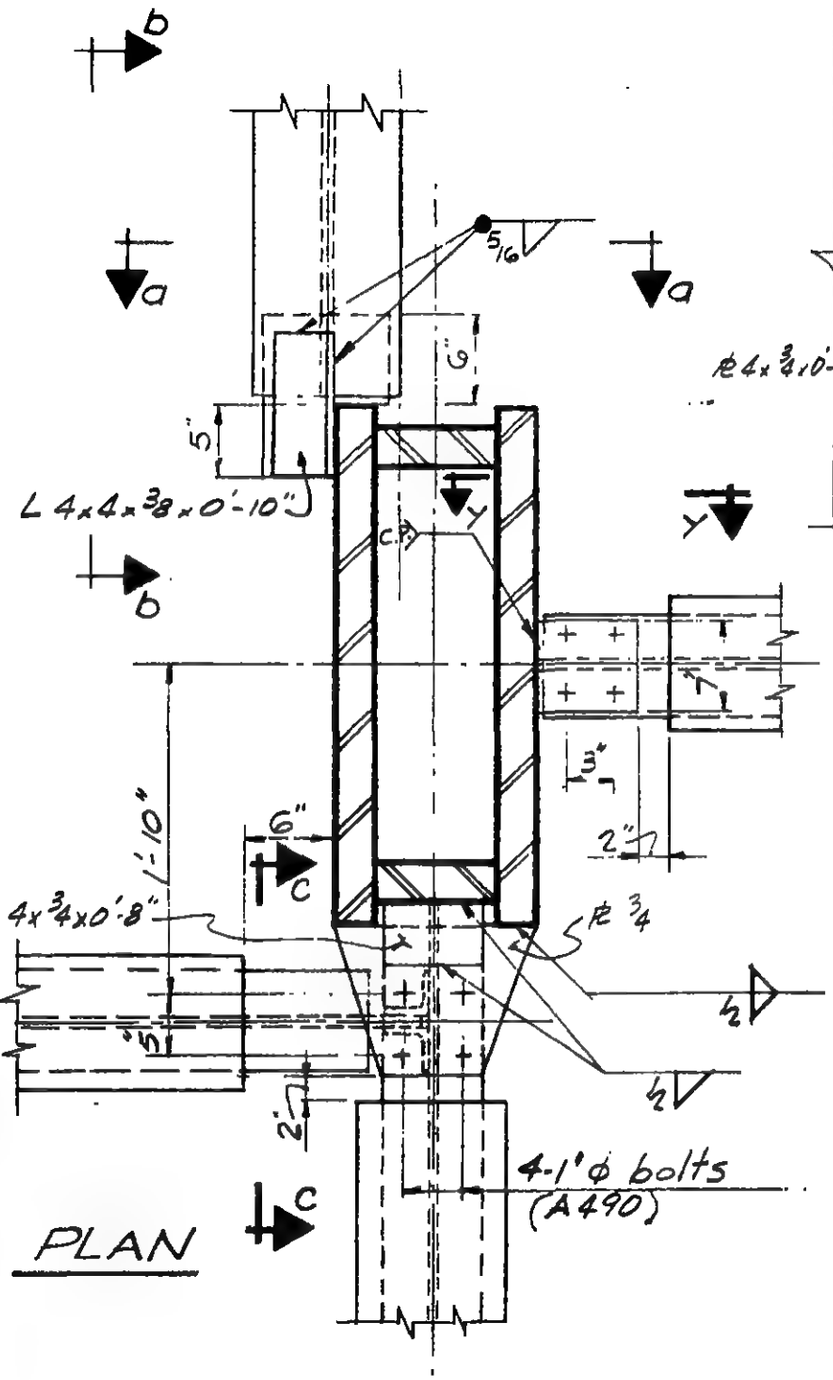

PLAN

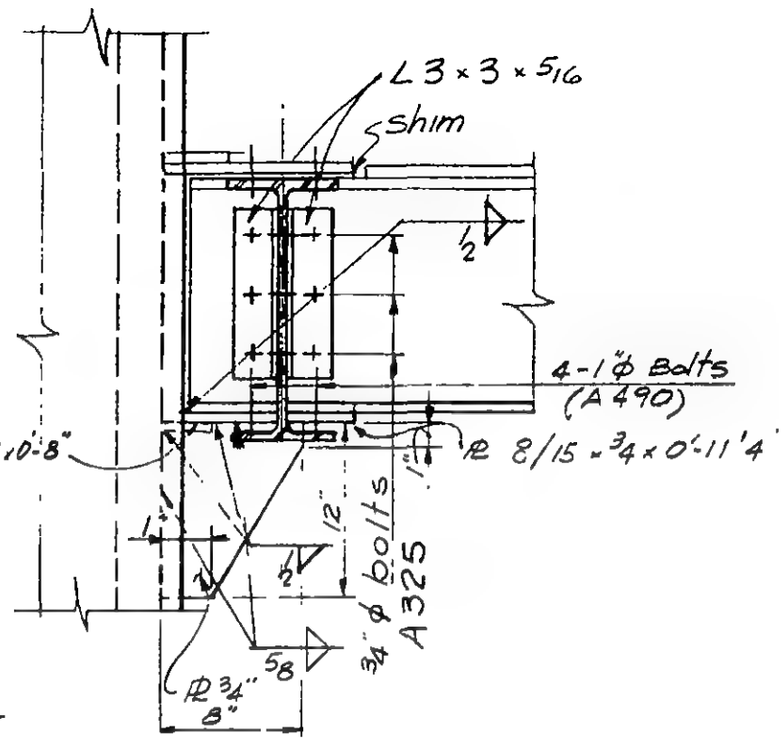

SECTION C-C

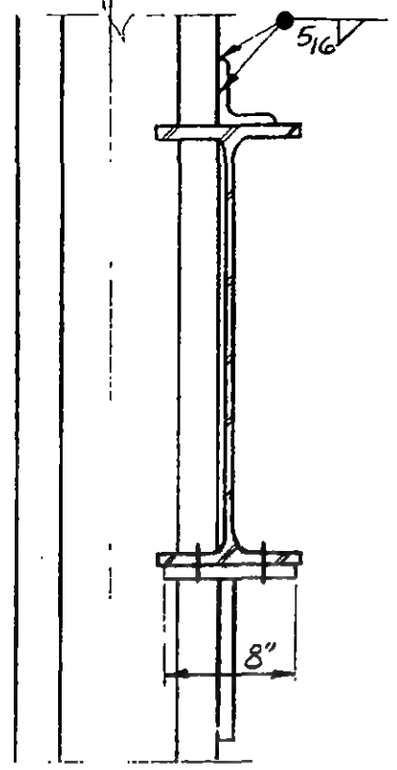

SECTION a-a

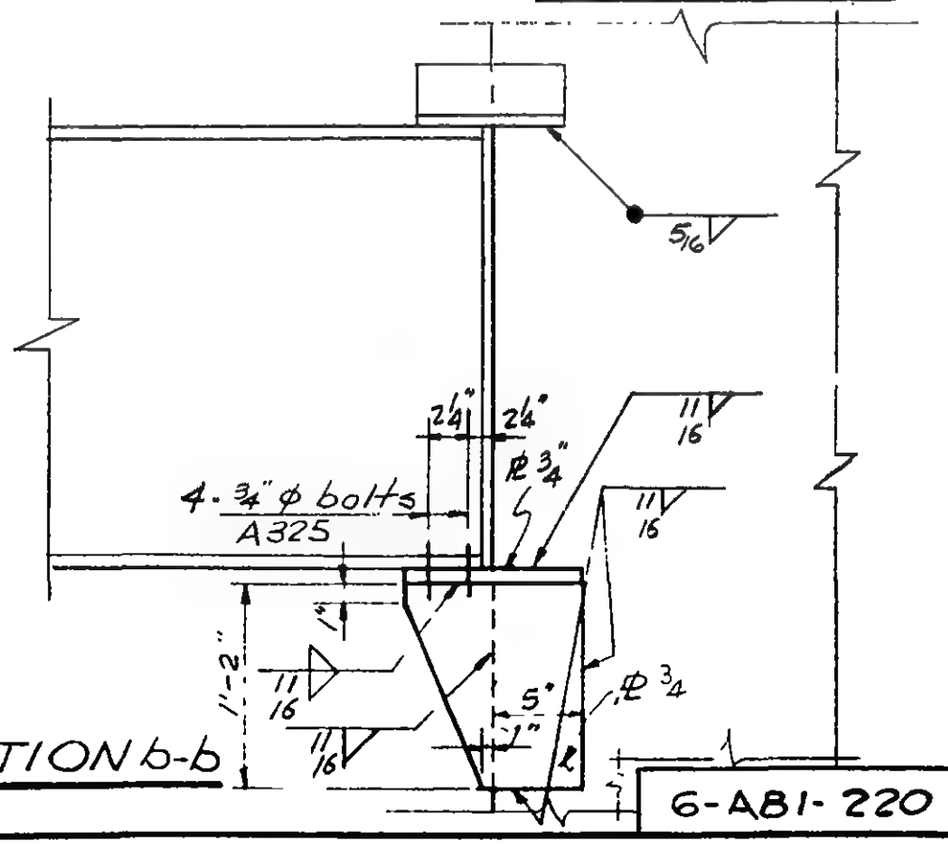

SECTION b-b

For SECTION Y-Y see dwg. 6-ABI-234
For TOWER B see dwg. 6-ABI-220.1

LICENSED PROFESSIONAL ENGINEER — LESLIE E. ROBERTSON — No. 34360 — UNIVERSITY OF THE STATE OF NEW YORK

6-ABI-220

WORTHINGTON, SKILLING, HELLE & JACKSON — Civil & Structural Engineers

PROJECT THE WORLD TRADE CENTER | TITLE SCHEDULE FOR DETAIL 714 | DATE 6-30-67

REVISIONS

	SECTION Y-Y
PLATES	
R P	7"x 5/8"
R Q	7"x 5/8"x 0'-7/8
R R	7/8"x 5/8"
DIMENSIONS	
A	0'-9 3/4
B	0'-10"
BOLTS	
K	4-1"ϕ(A 490)
L	4-1"ϕ(A 490)
WELDS	
①	7/16
②	7/16
④	9/16

LICENSED PROFESSIONAL ENGINEER
LESLIE E. ROBERTSON
No. 34360
UNIVERSITY OF THE STATE OF NEW YORK

6-ABI-220.1

WORTHINGTON, SKILLING, HELLE & JACKSON — Civil & Structural Engineers

PROJECT THE WORLD TRADE CENTER | TITLE CONNECTION DETAIL 715 | DATE 6-12-67

REVISIONS

6-30-67

For section Z-Z, Z1-Z1
See Dwg. 6-ABI-234

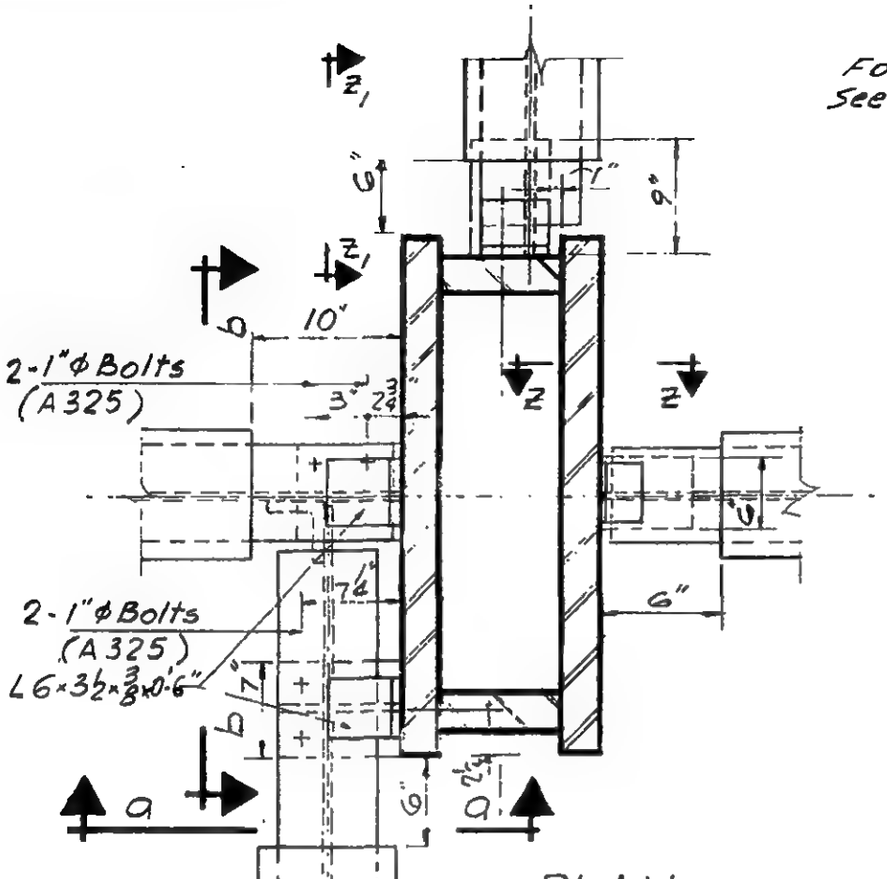

	SECTION Z-Z	SECTION Z1-Z1
PLATES		
PL P	5½"×½"	6"×⅜"
PL Q	6¼"×½"	6"×½"
DIMENSIONS		
A	0'-9¼"	1'-8¾"
B	1'-0"	0'-10"
BOLTS		
L	4-¾"ϕ (A325)	2-1"ϕ (A325)
WELDS		
①	⅜	¼
②	⅜	¼
④	7/16	7/16

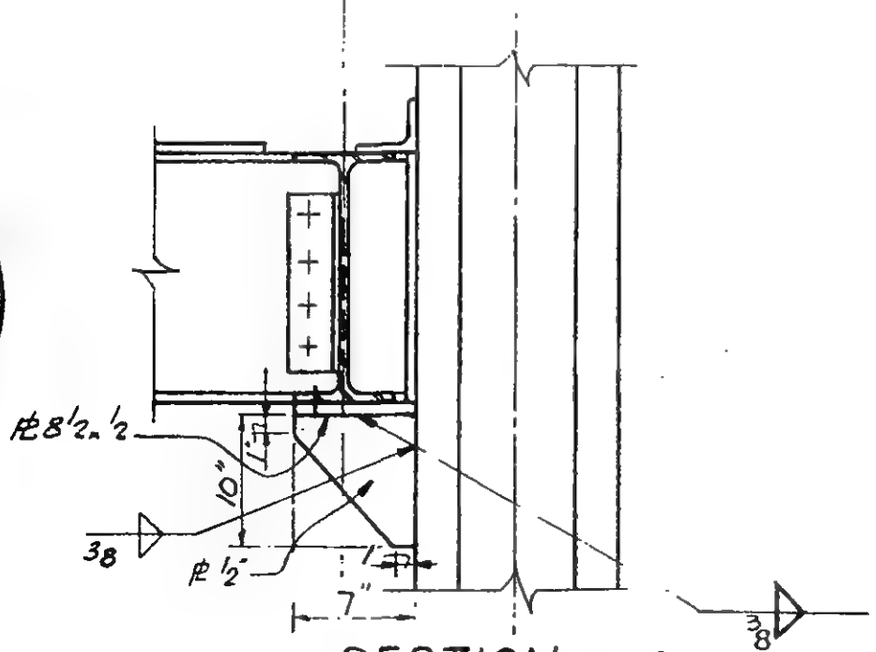

SECTION a-a

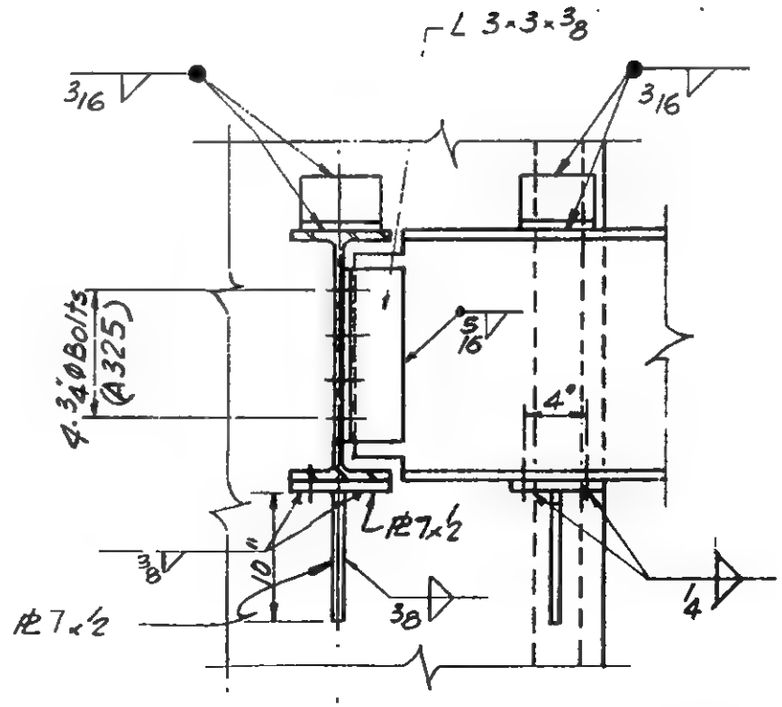

SECTION b-b

LICENSED PROFESSIONAL ENGINEER
LESLIE E. ROBERTSON
No. 34360
UNIVERSITY OF THE STATE OF NEW YORK

6-ABI-221

WORTHINGTON, SKILLING, HELLE & JACKSON — Civil & Structural Engineers

PROJECT THE WORLD TRADE CENTER | TITLE CONNECTION DETAIL 7/16 | DATE 6-12-67

REVISIONS

6-30-67

For SECTION X-X, Y-Y,
See Dwg. 6-AB1-234

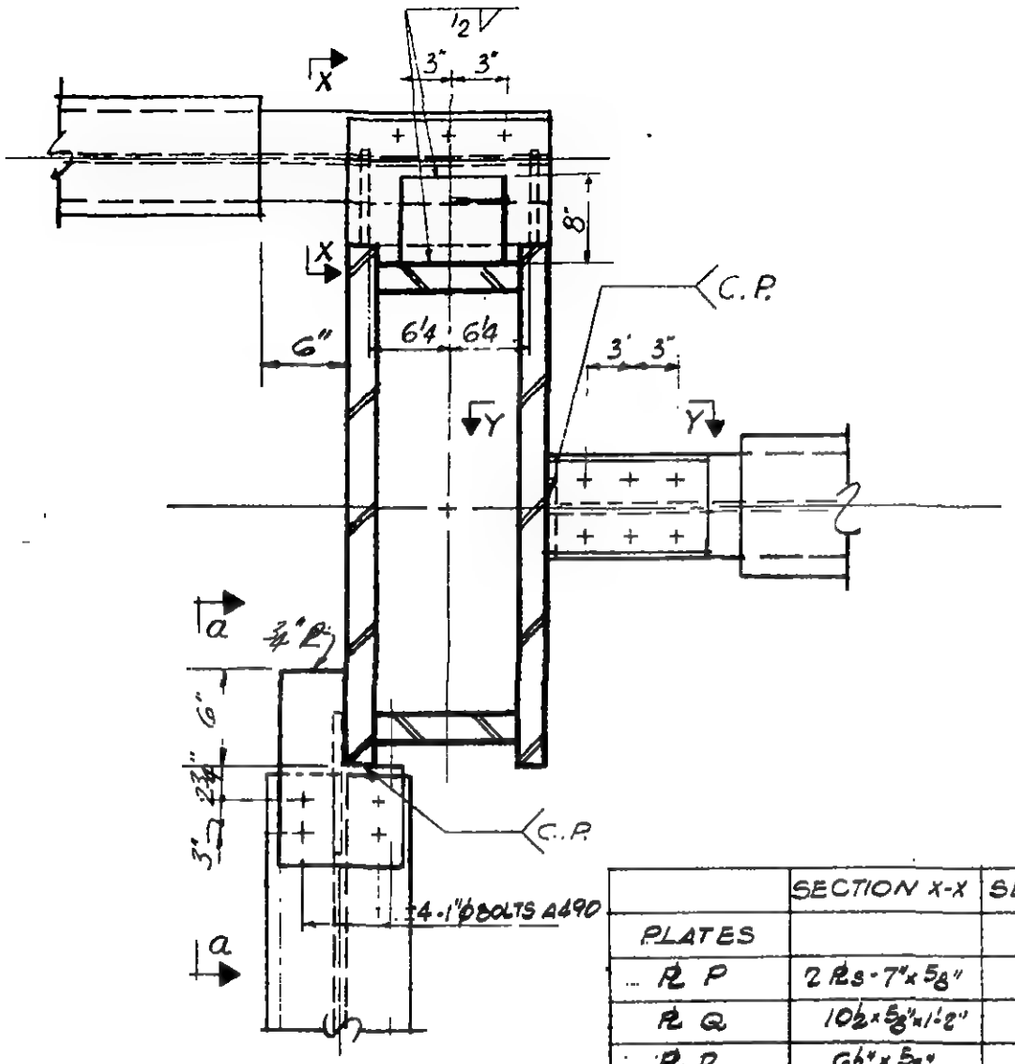

PLAN

	SECTION X-X	SECTION Y-Y
PLATES		
PL P	2 PLs - 7" x 5/8"	6" x 5/8"
PL Q	10½ x 5/8" x 1'-2"	7" x ¾"
PL R	6½" x 5/8"	7" x ¾"
DIMENSIONS		
A	2'-1¾"	0'-9¾"
B	1'-0"	1'-0"
BOLTS		
K	—	6-1"ø (A490)
L	3-1"ø (A325)	6-1"ø (A490)
WELDS		
①	7/16	½
②	7/16	½
③	—	C.P.
⑦	½	—

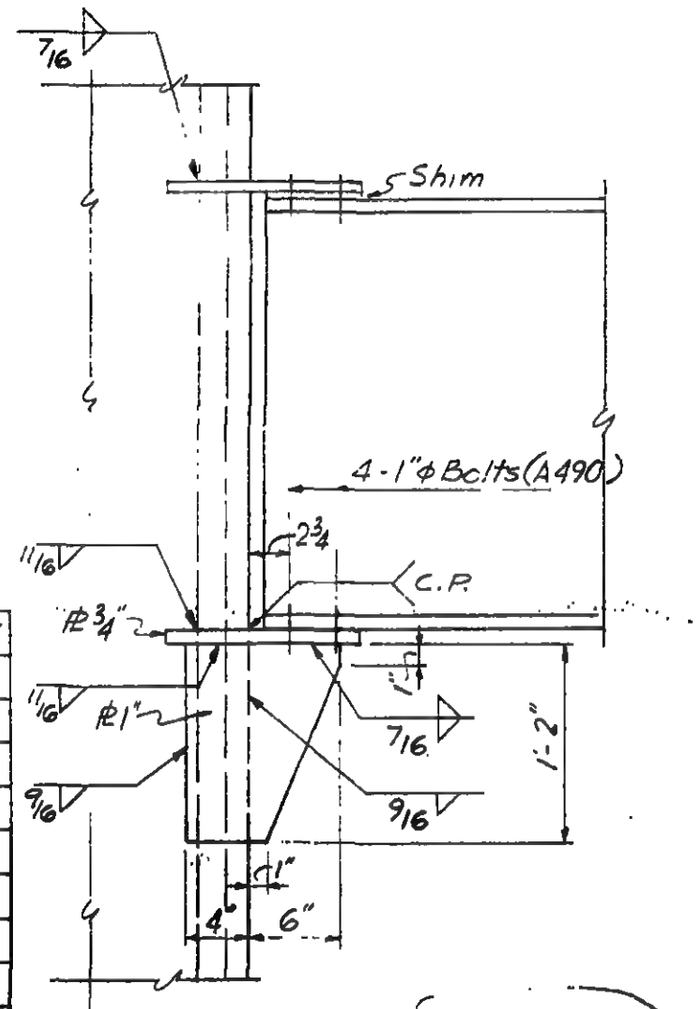

SECTION a-a Tower A only

LICENSED PROFESSIONAL ENGINEER
LESLIE E. ROBERTSON
No. 34360
UNIVERSITY OF THE STATE OF NEW YORK

6-AB1-222

WORTHINGTON, SKILLING, HELLE & JACKSON — Civil & Structural Engineers

PROJECT THE WORLD TRADE CENTER | TITLE CONNECTION DETAIL 7/7 | DATE 6-12-67

REVISIONS

6-30-67

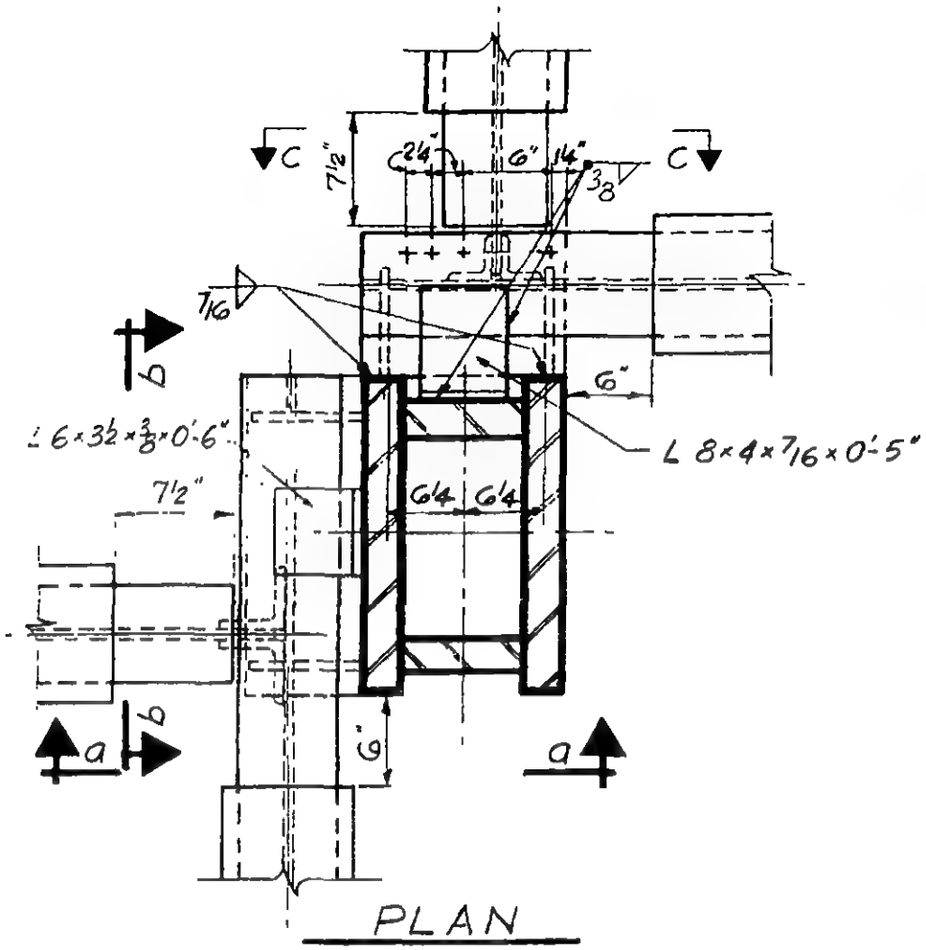

PLAN

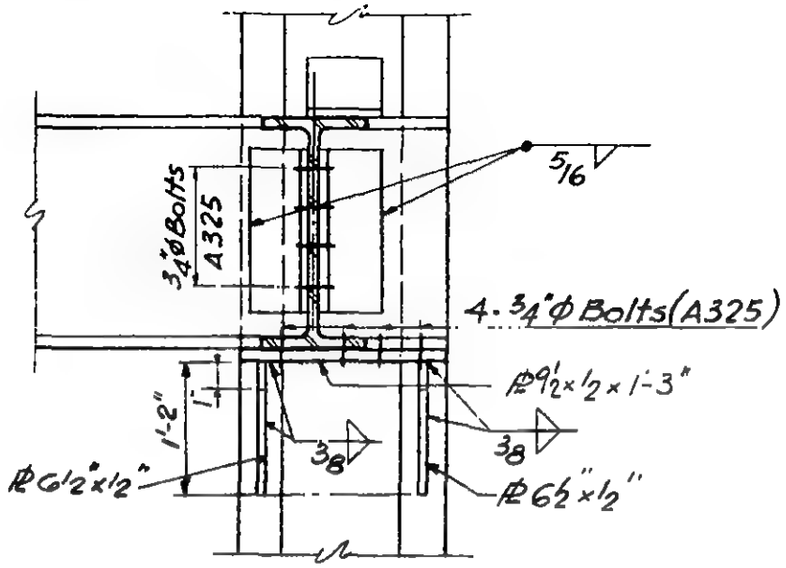

SECTION C-C

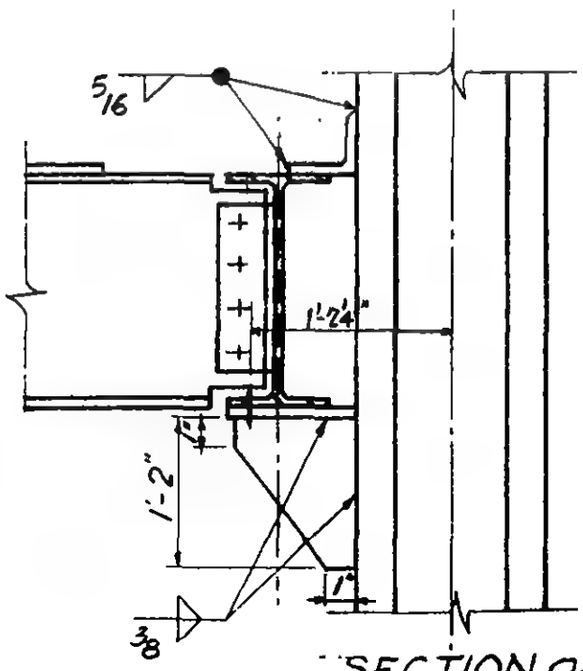

SECTION a-a

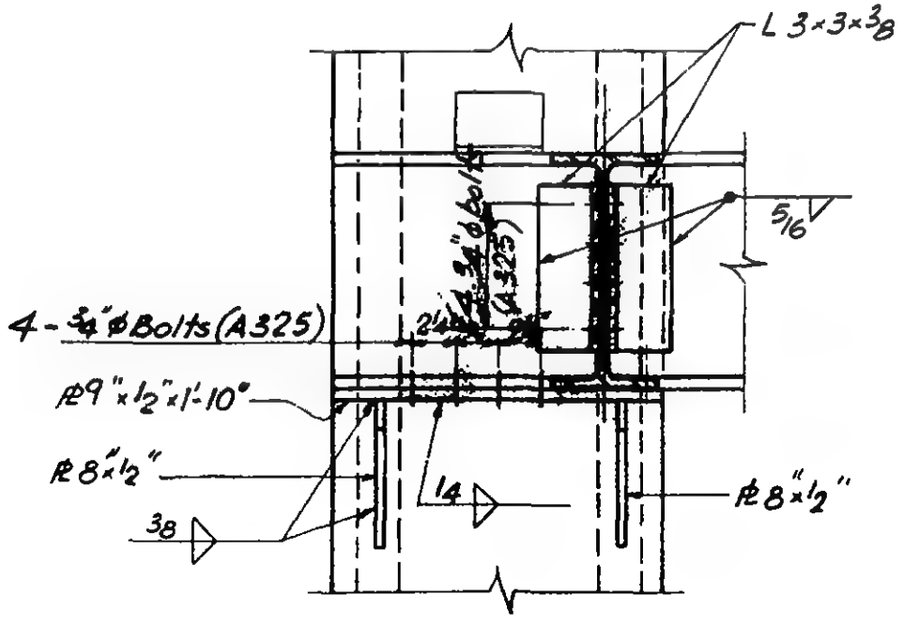

SECTION b-b

LICENSED PROFESSIONAL ENGINEER
LESLIE E. ROBERTSON
No. 34360
UNIVERSITY OF THE STATE OF NEW YORK

G-AB1-223

WORTHINGTON, SKILLING, HELLE & JACKSON — Civil & Structural Engineers

PROJECT - THE WORLD TRADE CENTER | TITLE CONNECTION DETAIL 718 | DATE 6-12-67

REVISIONS

6-30-67

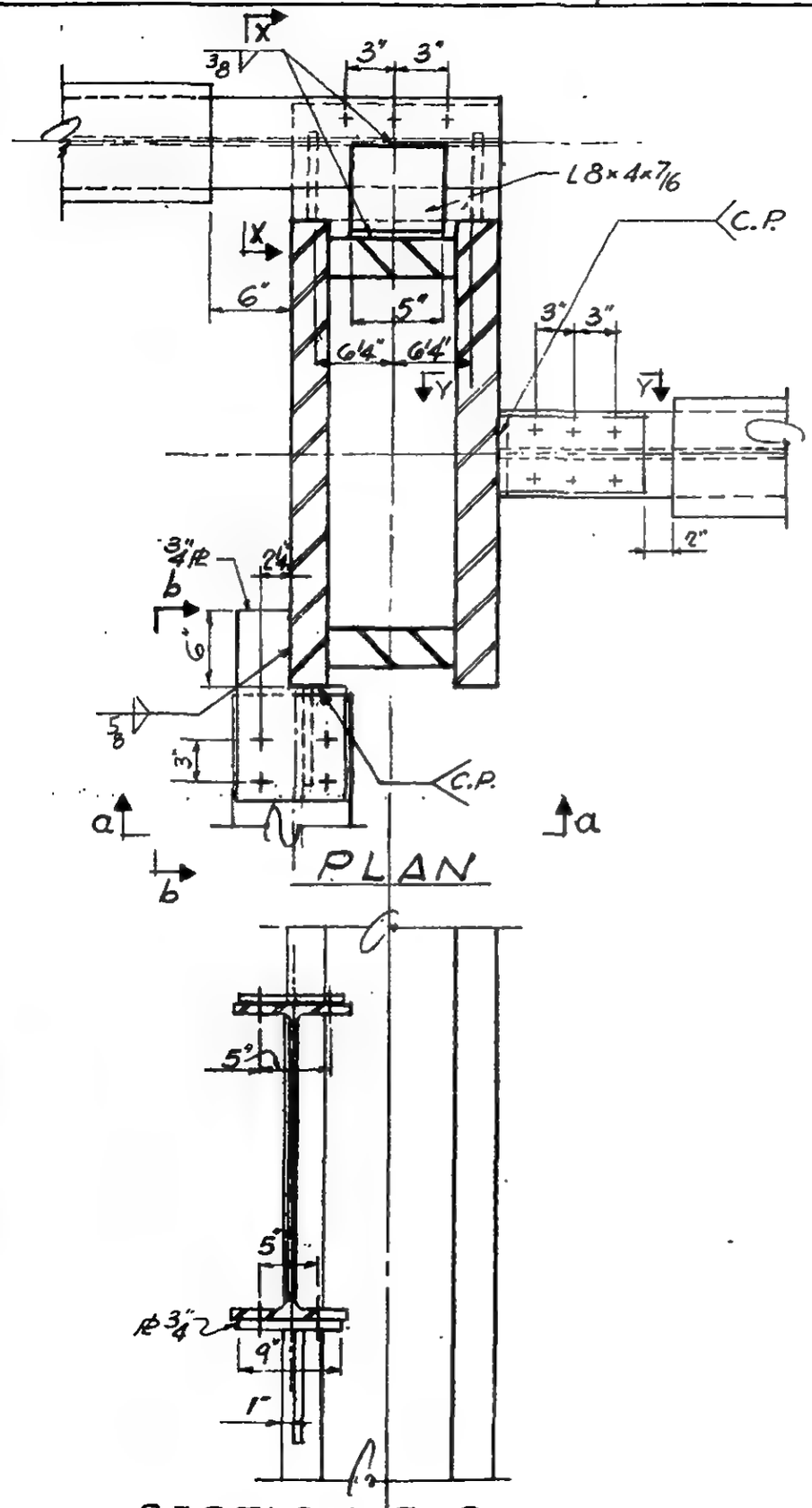

SECTION a-a

For SECTION X-X, Y-Y
See Dwg 6-AB1-234

	SECTION Y-Y	SECTION X-X
PLATES		
℄ P	7" x 5/8"	2 Rs. 7"x5/8"
℄ Q	7" x 3/4"	10"x5/8"x1'-4"
℄ R	7" x 3/4"	
DIMENSIONS		
A	0'-10¾"	2'-1¾"
B	1'-0"	0'-10"
BOLTS		
K	6-1"ϕ(A490)	—
L	6-1"ϕ(A490)	3-1"ϕ(A325)
WELDS		
①	½	½
②	½	½
③	C.P.	
⑦	—	9/16

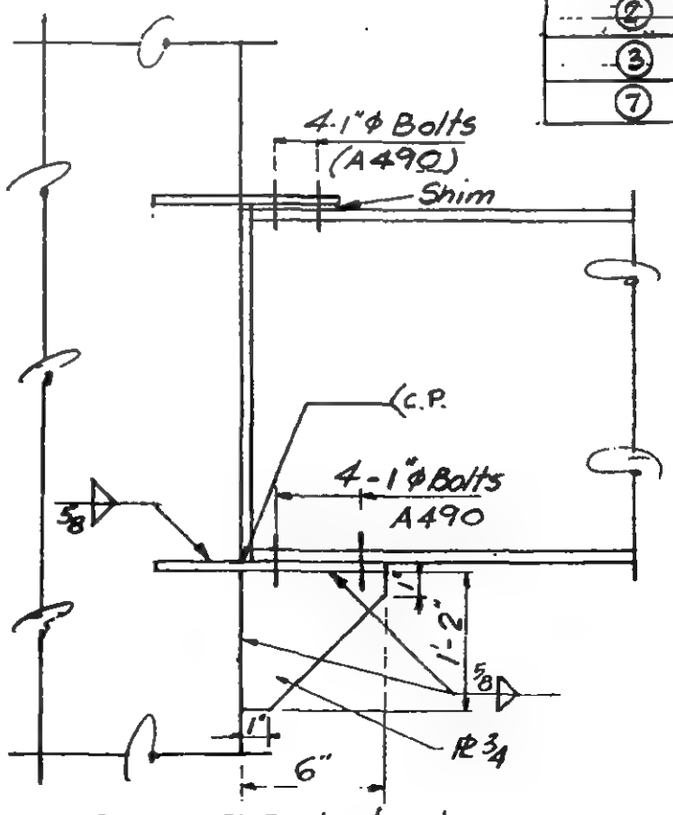

SECTION b-b

G-AB1-224

LICENSED PROFESSIONAL ENGINEER
LESLIE E. ROBERTSON
No. 24360
UNIVERSITY OF THE STATE OF NEW YORK

WORTHINGTON, SKILLING, HELLE & JACKSON — Civil & Structural Engineers

PROJECT THE WORLD TRADE CENTER | TITLE CONNECTION DETAIL 719, 719A | DATE 6-12-67

REVISIONS

6-30-67
10-7-68

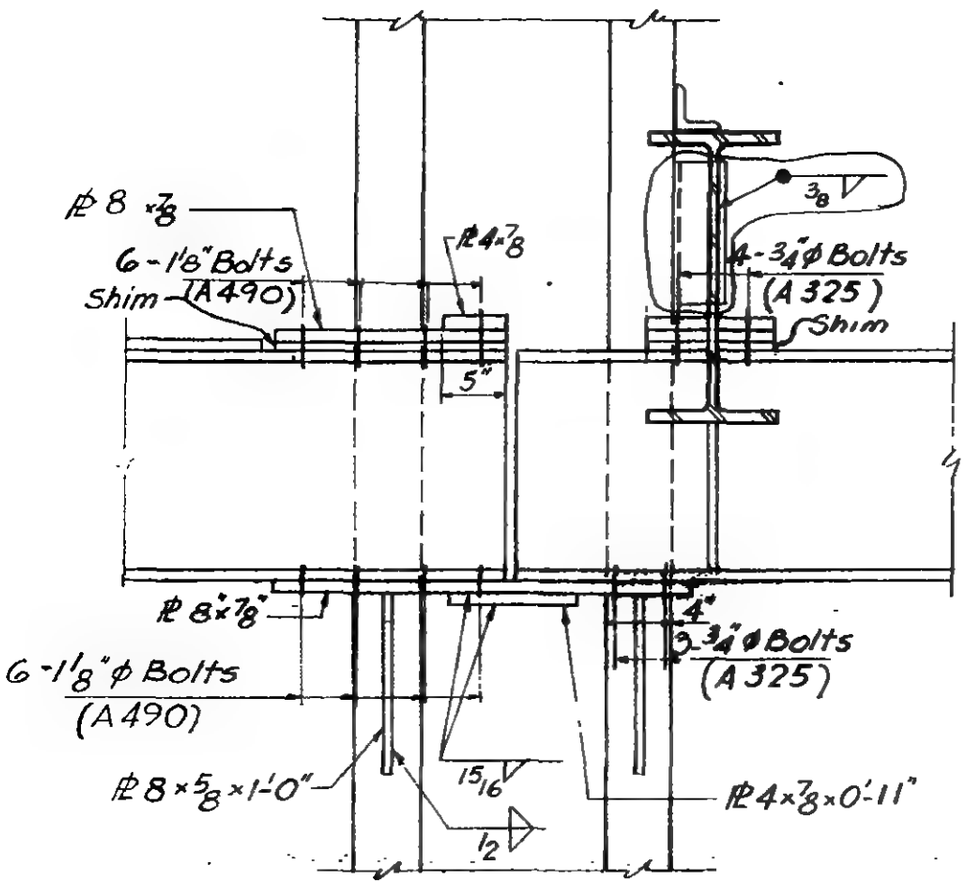

SECTION a-a

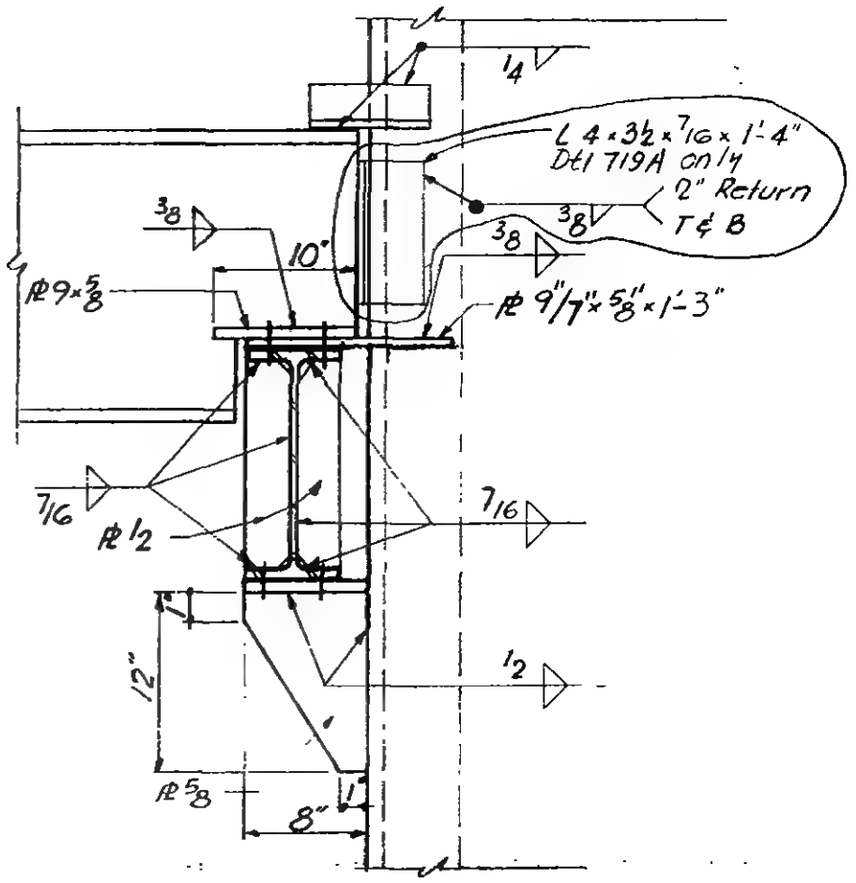

SECTION b-b

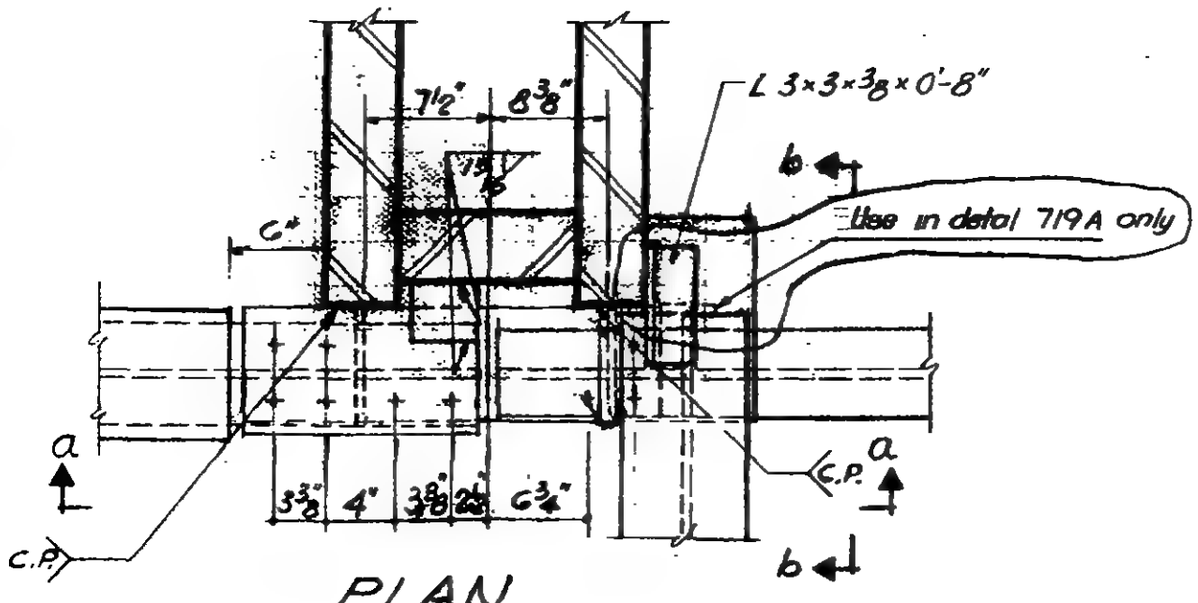

PLAN

LICENSED PROFESSIONAL ENGINEER
LESLIE E. ROBERTSON
No. 34360
UNIVERSITY OF THE STATE OF NEW YORK

6-ABI-225

WORTHINGTON, SKILLING, HELLE & JACKSON — Civil & Structural Engineers

PROJECT: THE WORLD TRADE CENTER | TITLE: CONNECTION DETAIL 720 | DATE: 6-12-67

REVISIONS

6-30-67

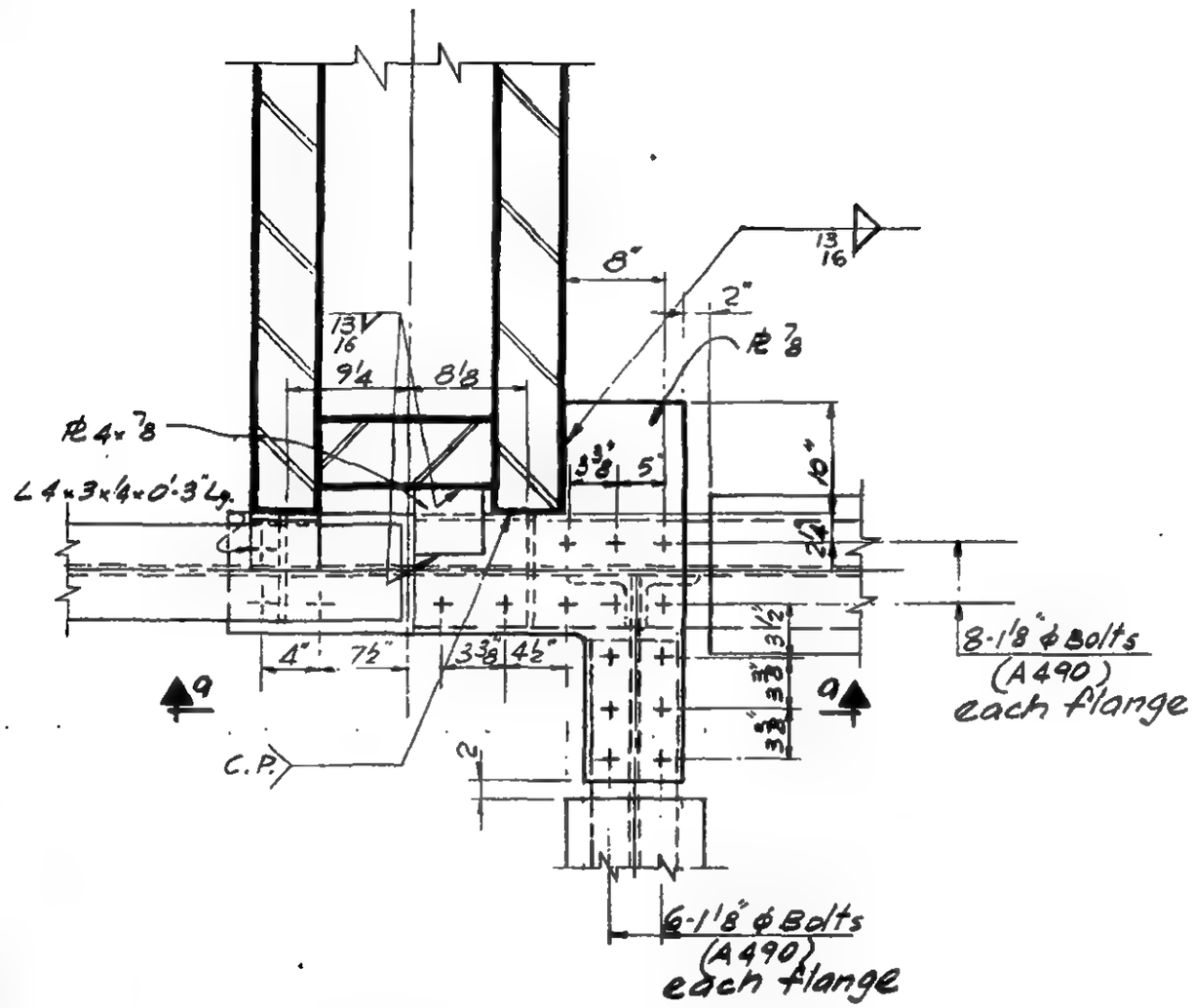

PLAN

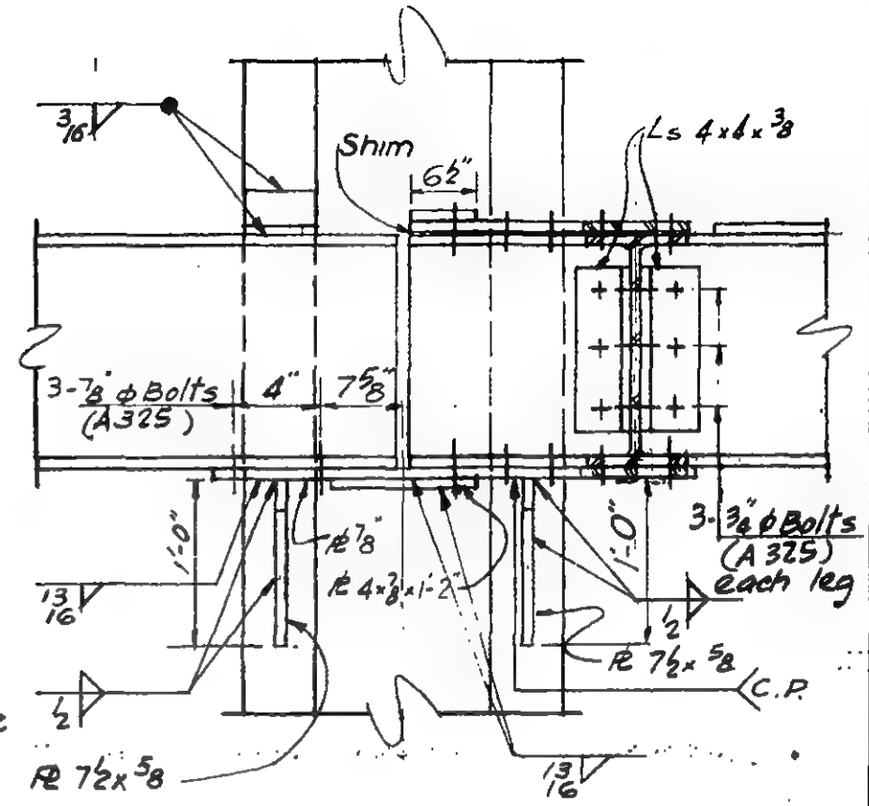

SECTION a-a

LESLIE E. ROBERTSON — LICENSED PROFESSIONAL ENGINEER — No. 34098 — STATE OF NEW YORK

G-AB1-226

WORTHINGTON, SKILLING, HELLE & JACKSON — Civil & Structural Engineers

PROJECT: THE WORLD TRADE CENTER | TITLE: CONNECTION DETAIL 721 | DATE: 6-12-67

REVISIONS

6-30-67

For SECTIONS Z-Z & Y-Y
See Dwg. 6-AB1-234

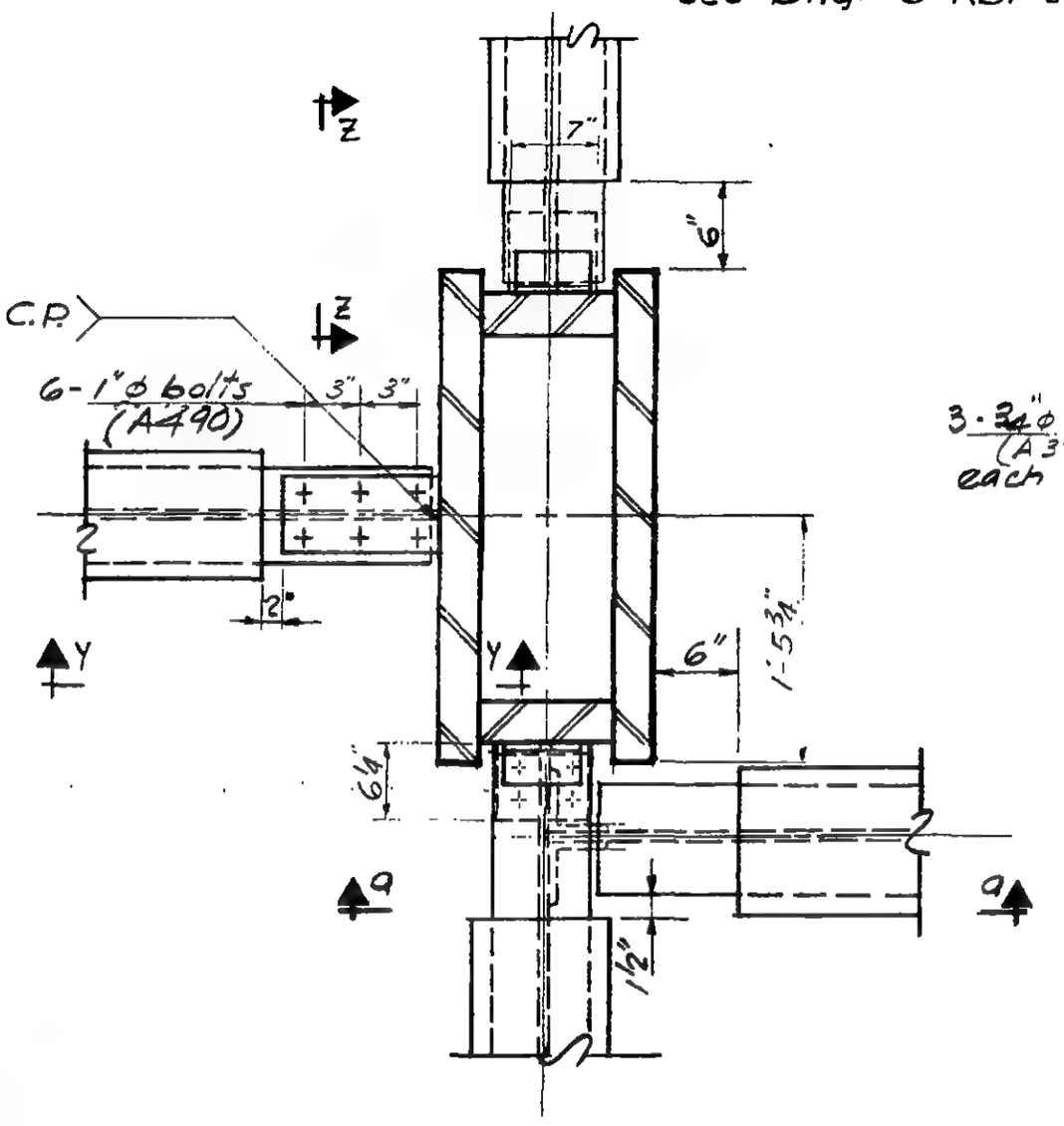

PLAN

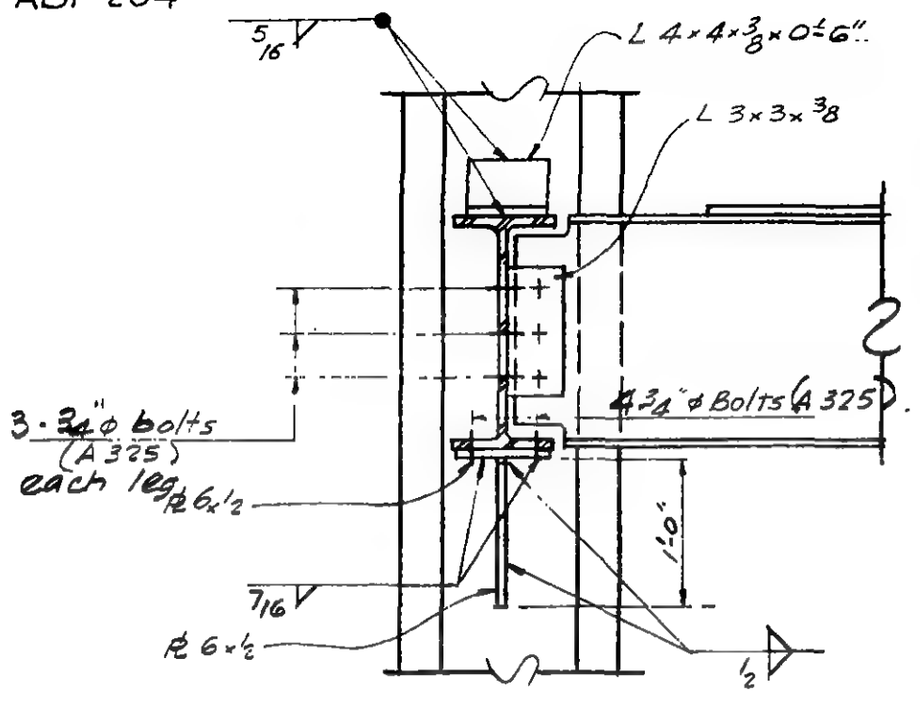

SECTION a-a

	SECTION Y-Y	SECTION Z-Z
PLATES		
PL P	6" × ¾"	4" × ½"
PL Q	7" × ⅞"	6¼" × ½
PL R	7" × ⅞"	—
DIMENSIONS		
A	0'-10¼"	1'-5¾"
B	1'-2"	0'-4"
BOLTS		
K	6-1"ϕ (A490)	—
L	6-1"ϕ (A490)	4-¾"ϕ (A325)
WELDS		
①	⅝	⅜
②	⅝	⅜
③	C.P.	—
④	—	7/16

LICENSED PROFESSIONAL ENGINEER
LESLIE E. ROBERTSON
No. 34360
UNIVERSITY OF THE STATE OF NEW YORK

6-AB1-221

WORTHINGTON, SKILLING, HELLE & JACKSON — Civil & Structural Engineers

PROJECT: THE WORLD TRADE CENTER | TITLE: CONNECTION DETAIL 722 | DATE: 6-12-67

REVISIONS

6-30-67

For SECTIONS Z-Z, Z1-Z1 & Z2-Z2
See Dwg. G-AB1-234

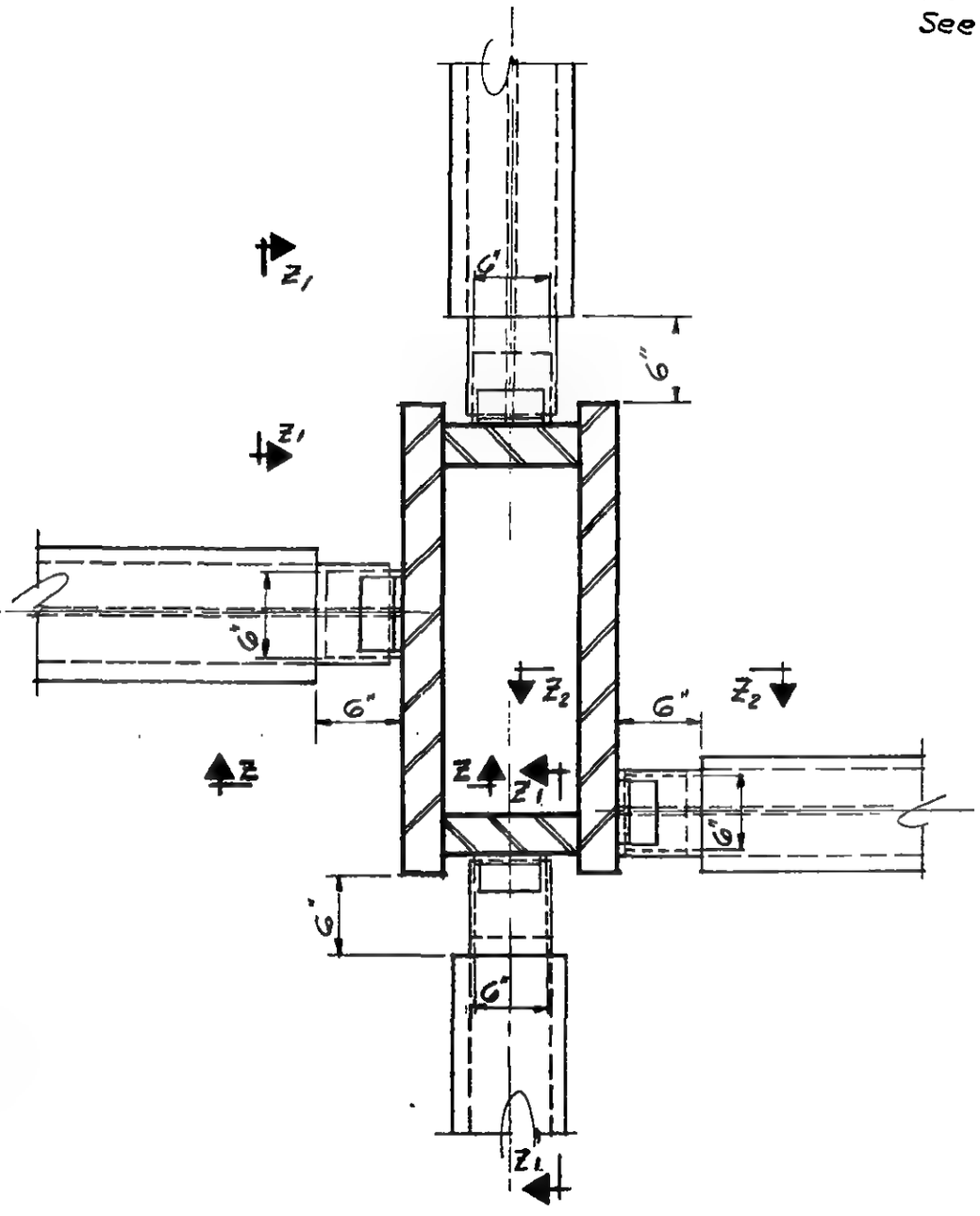

PLAN

	SECTION Z-Z	SECTION Z1-Z1	SECTION Z2-Z2
PLATES			
PL P	6" x 5/8"	5" x 1/2"	4" x 1/2"
PL Q	6 1/4" x 5/8"	6 1/4" x 1/2"	6 1/4" x 1/2"
DIMENSIONS			
A	0'-10 1/4"	1'-5 3/4"	0'-10 1/4"
B	0'-10"	0'-9"	0'-6"
BOLTS			
L	4-3/4" ϕ (A325)	4-3/4" ϕ (A325)	4-3/4" (A-325)
WELDS			
(1)	1/2	3/8	3/8
(2)	1/2	3/8	3/8
(4)	7/16	7/16	7/16

LICENSED PROFESSIONAL ENGINEER
LESLIE E. ROBERTSON
No. 34360
UNIVERSITY OF THE STATE OF NEW YORK

G-AB1-228

WORTHINGTON, SKILLING, HELLE & JACKSON — Civil & Structural Engineers

PROJECT THE WORLD TRADE CENTER | TITLE CONNECTION DETAIL 723, 723A | DATE 6-12-67

REVISIONS

6-30-67
2-9-68

For Sections Z-Z, Z1-Z1, Z2-Z2 & Z3-Z3
See Dwg. G-AB1-234

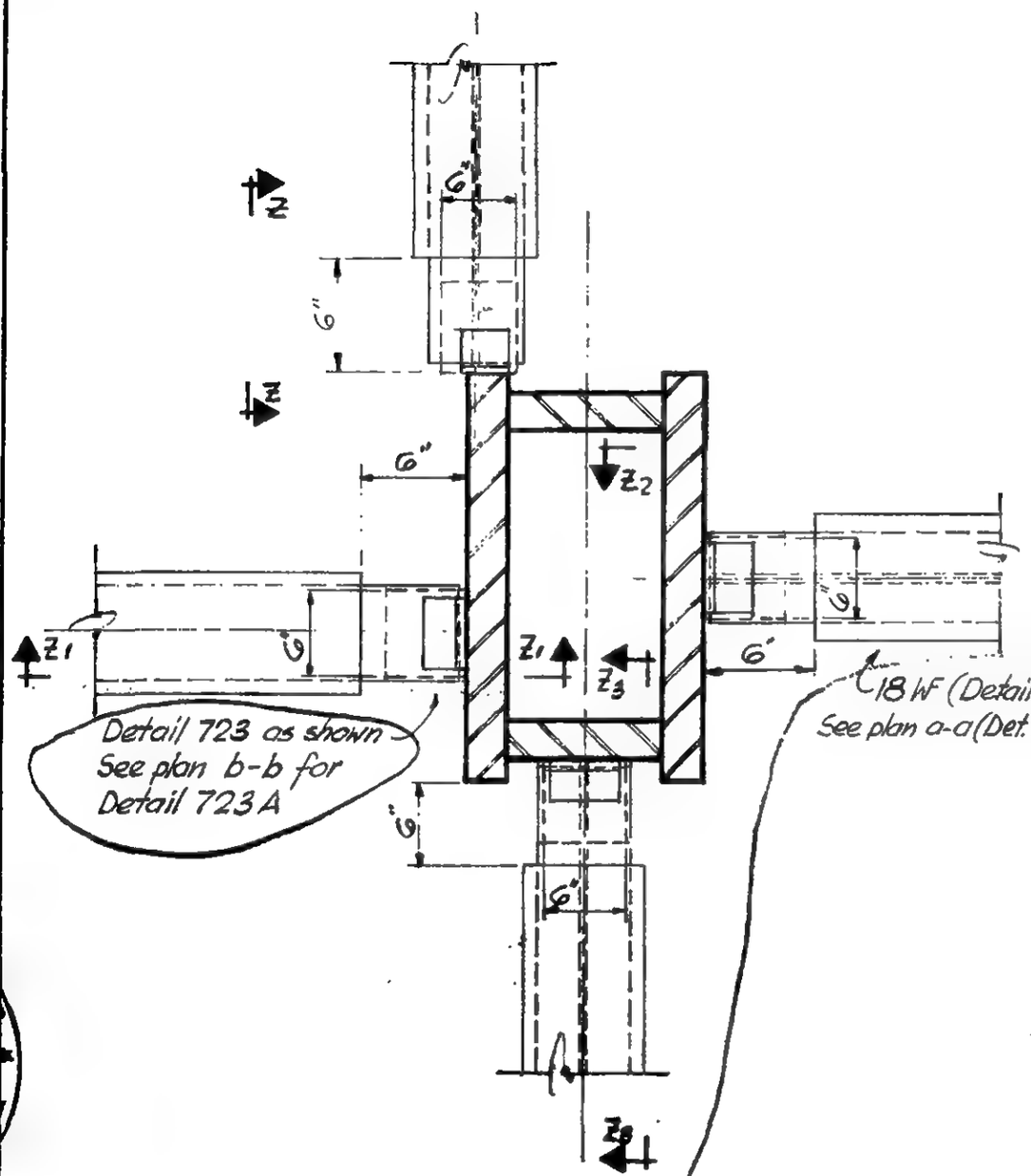

PLAN 723, 723A

	SECTION Z-Z	SECTION Z1-Z1	SECTION Z2-Z2	SECTION Z3-Z3
PLATES				
PL P	6" x 5/8"	4" x 1/2"	6" x 5/8"	4" x 1/2"
PL Q	6 1/4" x 5/8"	6 1/4" x 1/2"	6 1/4" x 5/8"	6 1/4" x 1/2"
DIMENSIONS				
A	1'-5 1/4"	0'-10 3/4"	0'-10 3/4"	1'-3 1/4"
B	0'-11"	0'-8"	1'-2"	0'-8"
BOLTS				
L	4-3/4" ϕ (A325)	4-3/4" ϕ (A325)	4-3/4" ϕ (A325)	4-3/4" ϕ (A325)
WELDS				
(1)	1/2	5/16	1/2	5/16
(2)	1/2	5/16	1/2	5/16
(3)	C.P.	–	–	–
(4)	–	7/16	7/16	7/16

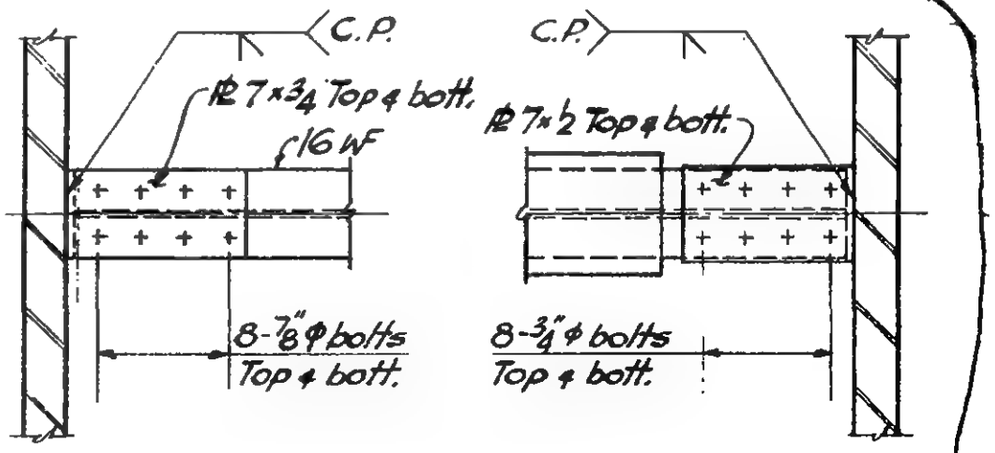

Plan a-a (Brackets same as scheduled for detail 723)

Plan b-b

LICENSED PROFESSIONAL ENGINEER
LESLIE E. ROBERTSON
No. 34960
UNIVERSITY OF THE STATE OF NEW YORK

G-AB1-229

WORTHINGTON, SKILLING, HELLE & JACKSON — Civil & Structural Engineers

PROJECT: THE WORLD TRADE CENTER | TITLE: CONNECTION DETAIL 724, 724 A | DATE: 6-12-67

REVISIONS

6-30-67
2-9-68

For section z-z see Dwg. 6-AB1-234

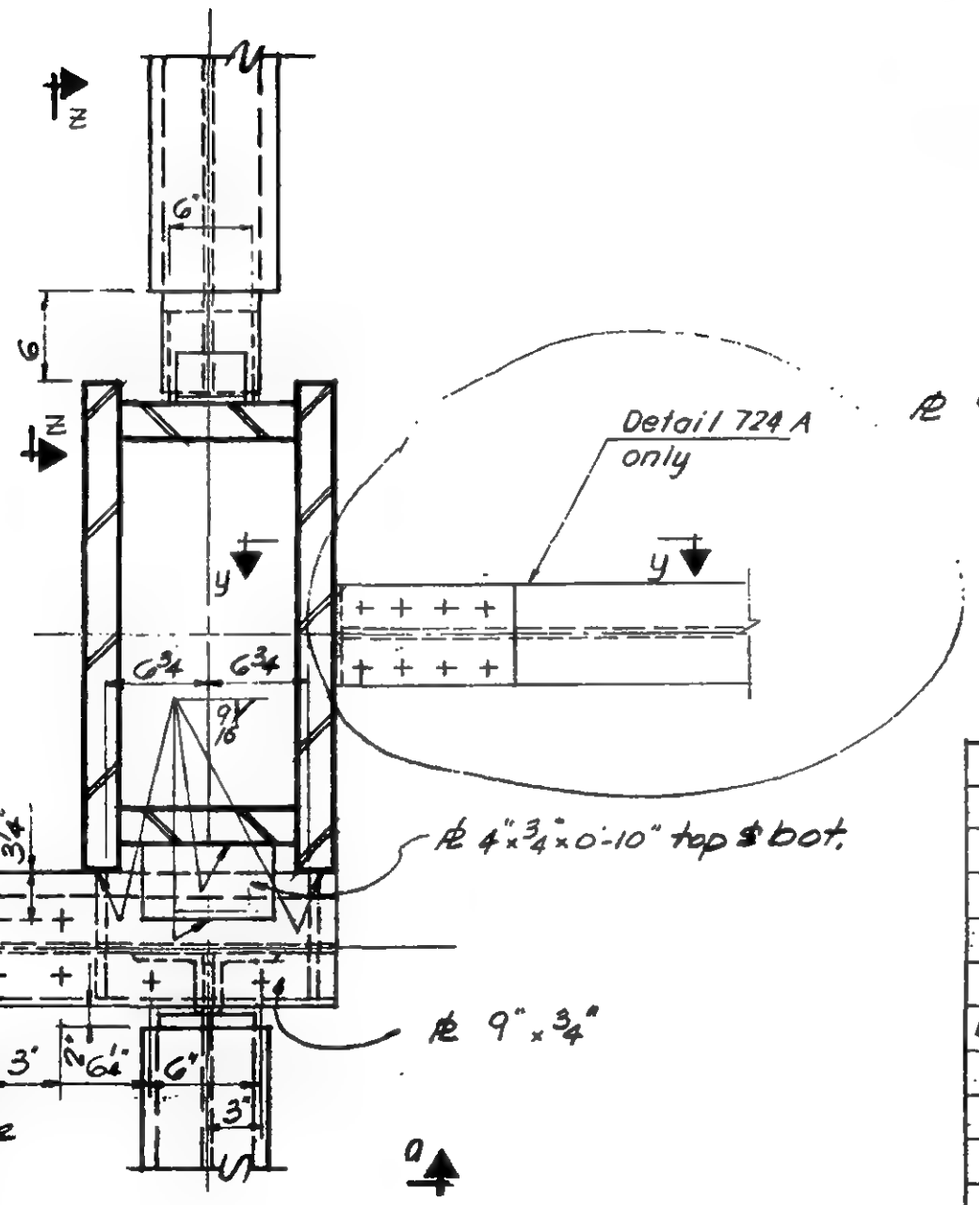

Plan 724, 724 A

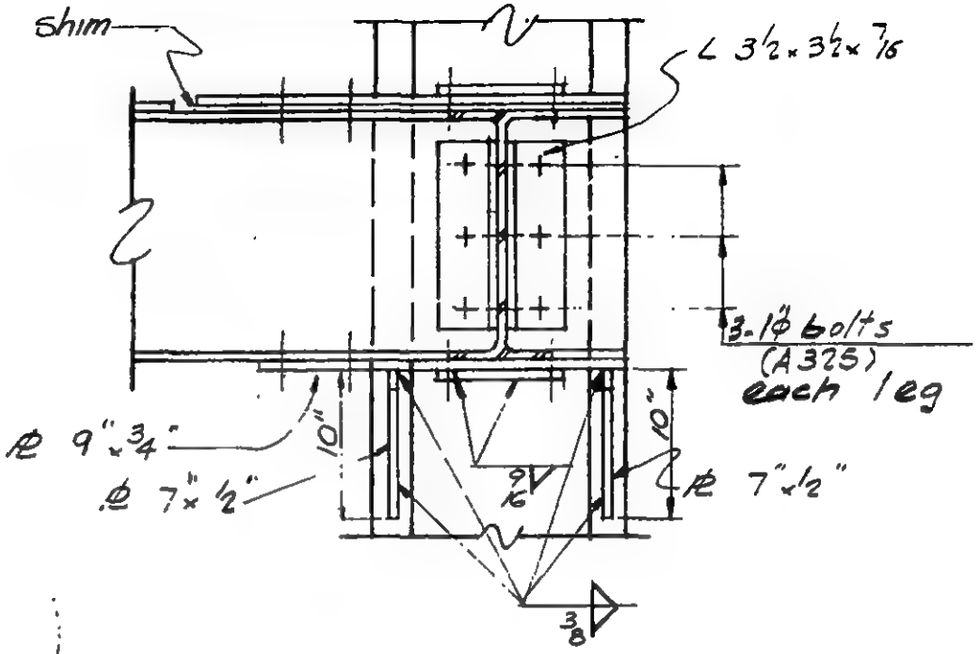

Section a-a

	SECTION Z-Z	SECTION y-y
PLATES		
℄ P	4½"x½"	6"x⅝"
℄ Q	6¼"x½"	7"x¾"
℄ R		7"x¾"
DIMENSIONS		
A	1'-5¾"	—
B	0'-8"	1'-2"
BOLTS		
(K)	—	8-⅞"ϕ
L	4-¾"ϕ (A325)	8-⅞"ϕ
WELDS		
(1)	3/8	½
(2)	3/8	½
(4)	7/16	C.P.

6-AB1-230

LICENSED PROFESSIONAL ENGINEER — LESLIE E. ROBERTSON — No. 34360 — UNIVERSITY OF THE STATE OF NEW YORK

WORTHINGTON, SKILLING, HELLE & JACKSON — Civil & Structural Engineers

PROJECT: THE WORLD TRADE CENTER | TITLE: CONNECTION DETAIL 725 | DATE: 6-12-67

REVISIONS

6-30-67

For section z-z see Dwg. 6-ABI-234.

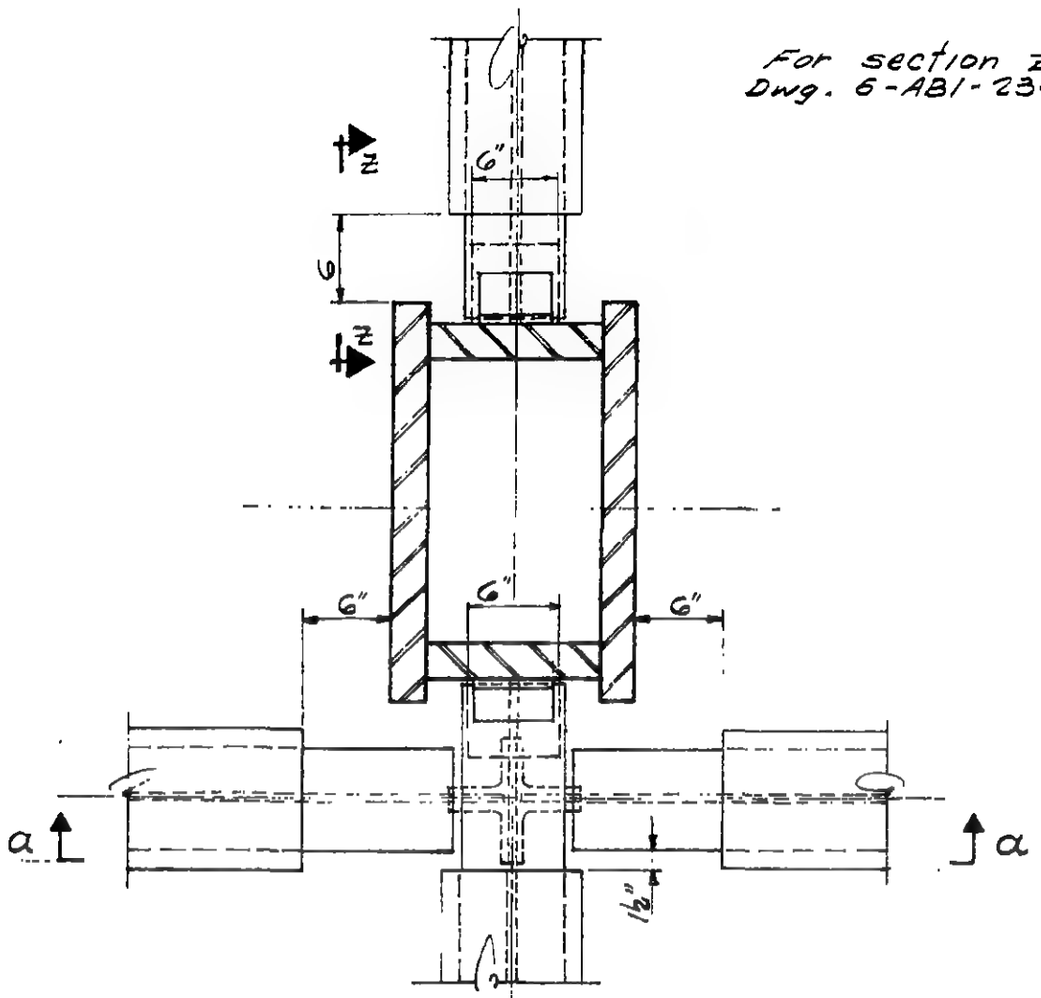

PLAN

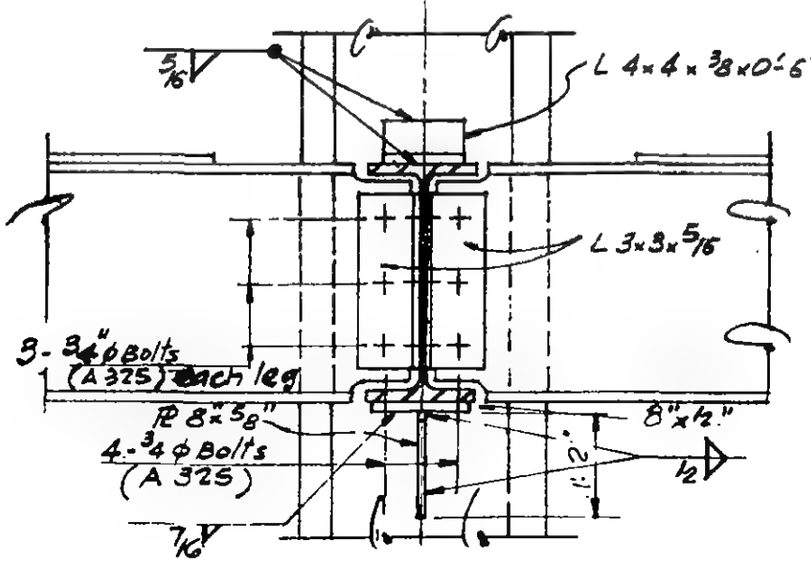

SECTION a-a

	SECTION Z-Z
PLATES	
PL P	5"×½"
PL Q	6¼"×½"
DIMENSIONS	
A	1'-2¼"
B	0'-10"
BOLTS	
L	4-¾ ϕ (A325)
WELDS	
①	5/16
②	5/16
④	7/16

LICENSED PROFESSIONAL ENGINEER — LESLIE E. ROBERTSON — No. 34360 — UNIVERSITY OF THE STATE OF NEW YORK

6-ABI-231

WORTHINGTON, SKILLING, HELLE & JACKSON — Civil & Structural Engineers

PROJECT THE WORLD TRADE CENTER | TITLE CONNECTION DETAIL 726 | DATE 6-12-67

REVISIONS

6-30-67

For section x-x, z-z, z,-z,
See Dwg. 6-AB1-234

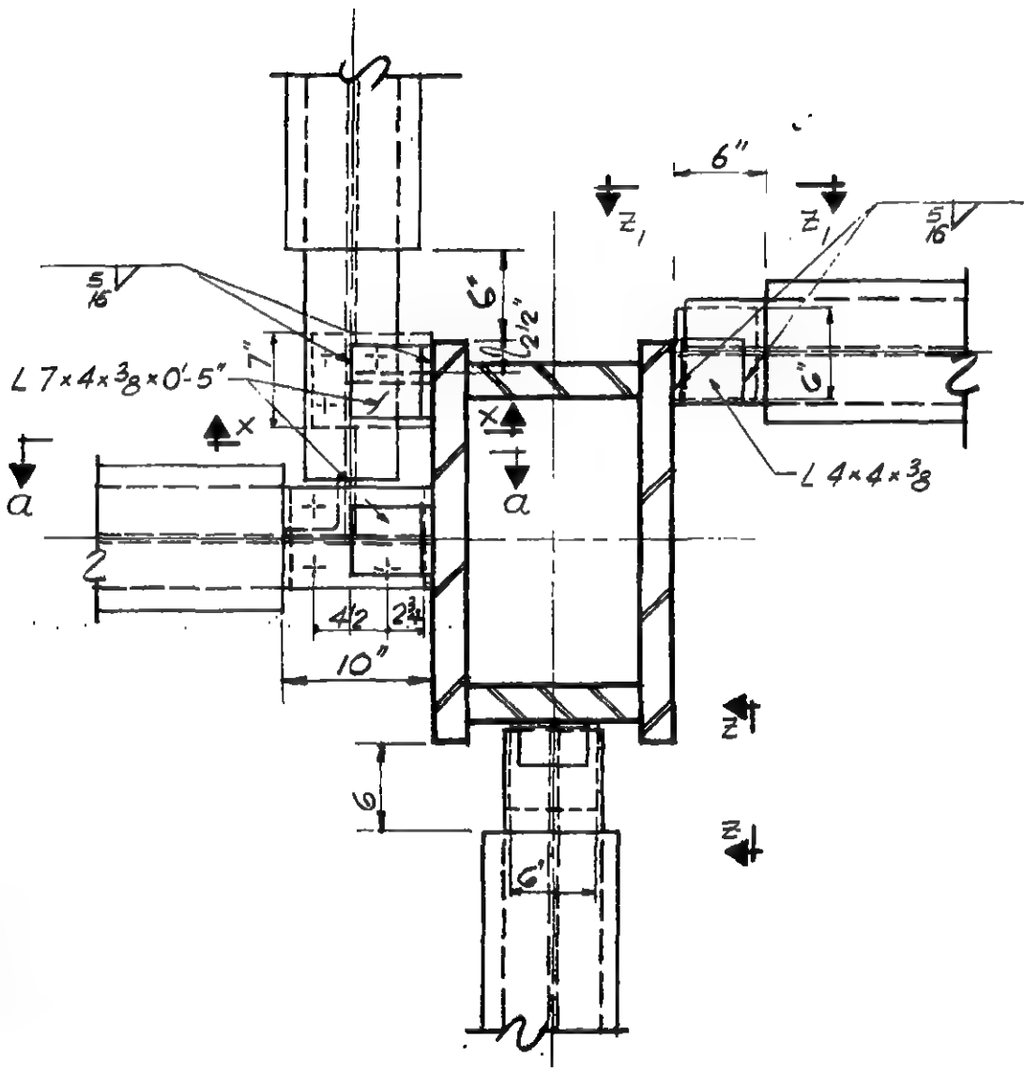

PLAN

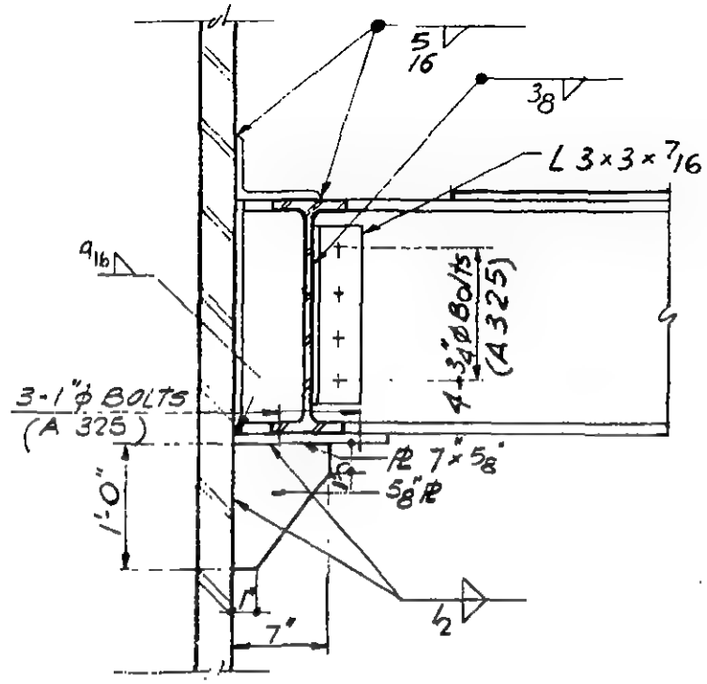

SECTION a-a

	SECTION X-X	SECTION Z-Z	SECTION Z,-Z,
PLATES			
PL P	7 1/2" x 1/2"	5" x 1/2"	5" x 1/2"
PL Q	1/2"	6 1/4" x 1/2" x 0'-6"	6 1/4" x 1/2"
DIMENSIONS			
A	1'-0 3/4"	1'-2 1/4"	0'-10 3/4"
B	0'-11"	0'-8"	0'-8"
BOLTS			
L	3-1"ø (A325)	4-3/4"ø (A325)	4-3/4 (A325)
WELDS			
①	3/8	5/16	5/16
②	3/8	5/16	5/16
③	—	—	C.P.
④	7/16	7/16	—

LICENSED PROFESSIONAL ENGINEER
LESLIE E. ROBERTSON
No. 34360
UNIVERSITY OF THE STATE OF NEW YORK

6-AB1-232

WORTHINGTON, SKILLING, HELLE & JACKSON — Civil & Structural Engineers

PROJECT THE WORLD TRADE CENTER | TITLE CONNECTION DETAIL 727 | DATE 6-12-67

REVISIONS

6-30-67

For section Y-Y, Y_1-Y_1 See Dwg. G-AB1-234

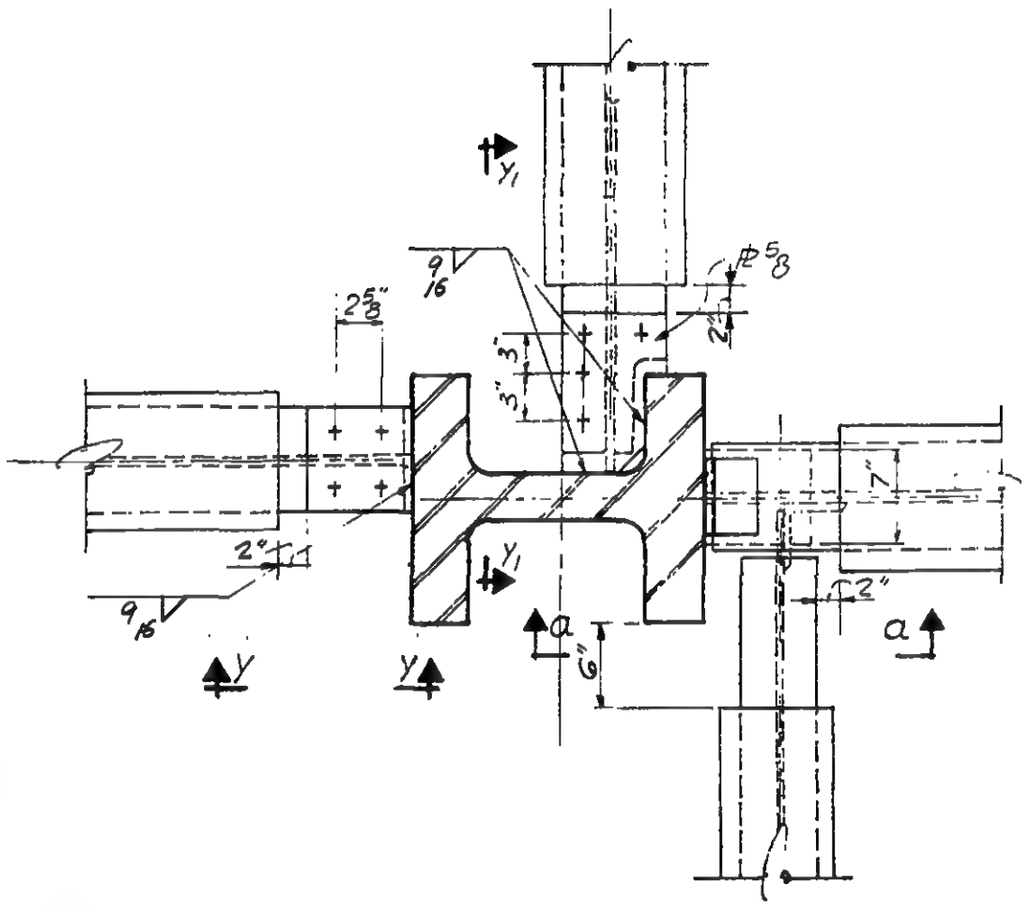

PLAN

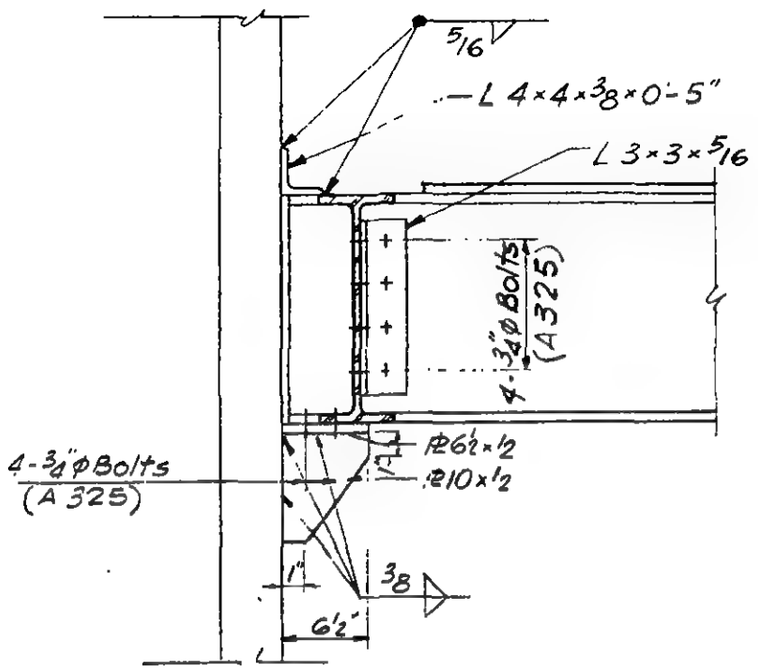

SECTION a-a

	SECTION Y-Y	SECTION Y_1-Y_1
PLATES		
PL P	7" × 1/2"	7" × 5/8"
PL Q	6 1/2" × 5/8"	Same as PL R
PL R	6 1/2" × 5/8"	See plan.
DIMENSIONS		
A	1'-0 5/8"	0'-4"
B	0'-8"	0'-11"
BOLTS		
K	4-7/8"Ø (A325)	4-1"Ø (A325)
L	4-7/8"Ø (A325)	4-1"Ø (A325)
WELDS		
①	3/8	1/2
②	3/8	1/2
④	9/16	9/16

LICENSED PROFESSIONAL ENGINEER LESLIE E. ROBERTSON No. 34960 UNIVERSITY OF THE STATE OF NEW YORK

G-AB1-233

WORTHINGTON, SKILLING, HELLE & JACKSON — Civil & Structural Engineers

PROJECT THE WORLD TRADE CENTER | TITLE SECTIONS X-X, Y-Y and Z-Z | DATE 6-30-67

REVISIONS

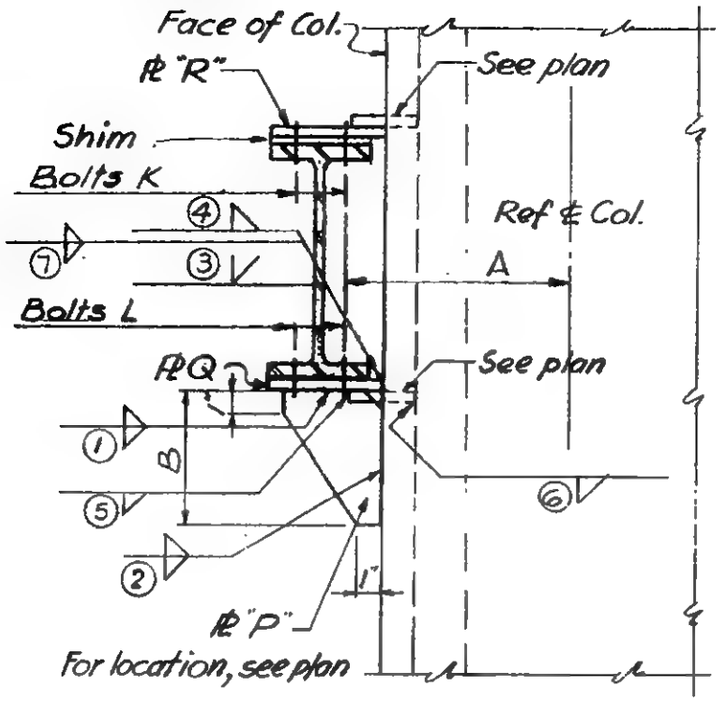

SECTION X-X

SECTION X1-X1, X2-X2 Similar except as noted in schedule and plan.

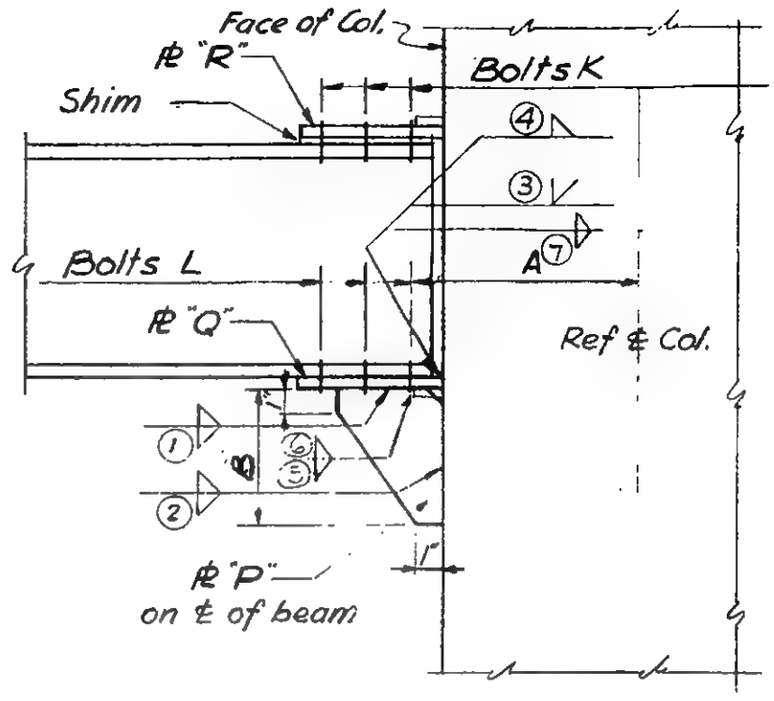

SECTION Y-Y

SECTION Y1-Y1, Y2-Y2 Similar except as noted in schedule and plan.

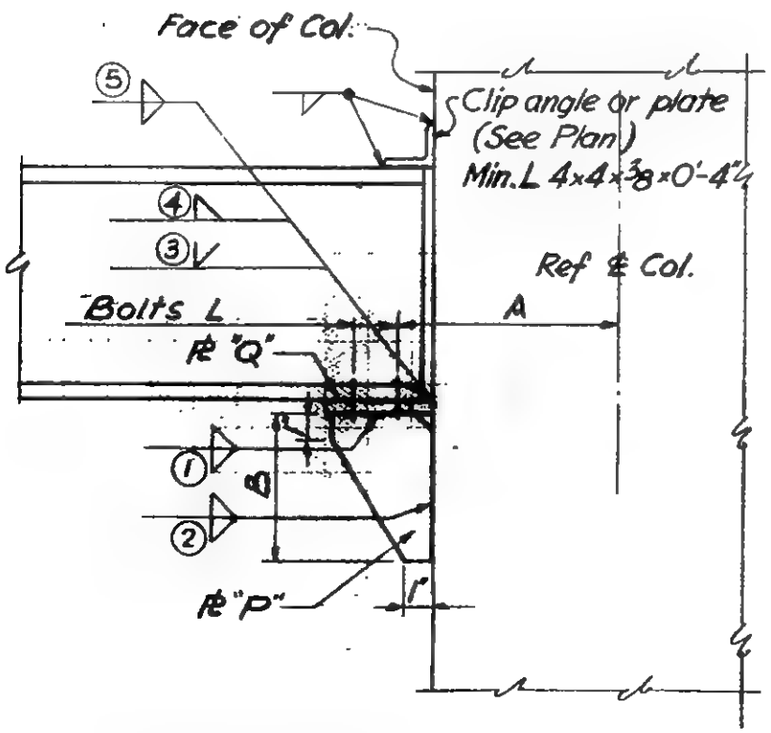

SECTION Z-Z

SECTION Z1-Z1, Z2-Z2, Z3-Z3 similar except as noted in schedule and plan.

NOTE:

Minimum distances between center lines of bolt holes shall be
¾", ⅞", 1" bolts - 3"
1⅛" bolts 3 ⅜"
unless otherwise noted

LICENSED PROFESSIONAL ENGINEER LESLIE E. ROBERTSON No. 34960 UNIVERSITY OF THE STATE OF NEW YORK

6-AB1-234

SKILLING - HELLE - CHRISTIANSEN - ROBERTSON Structural & Civil Engineers

PROJECT THE WORLD TRADE CENTER | TITLE CONNECTION DETAIL 728 (728 A) | DATE 8-14-67

REVISIONS

2-9-68

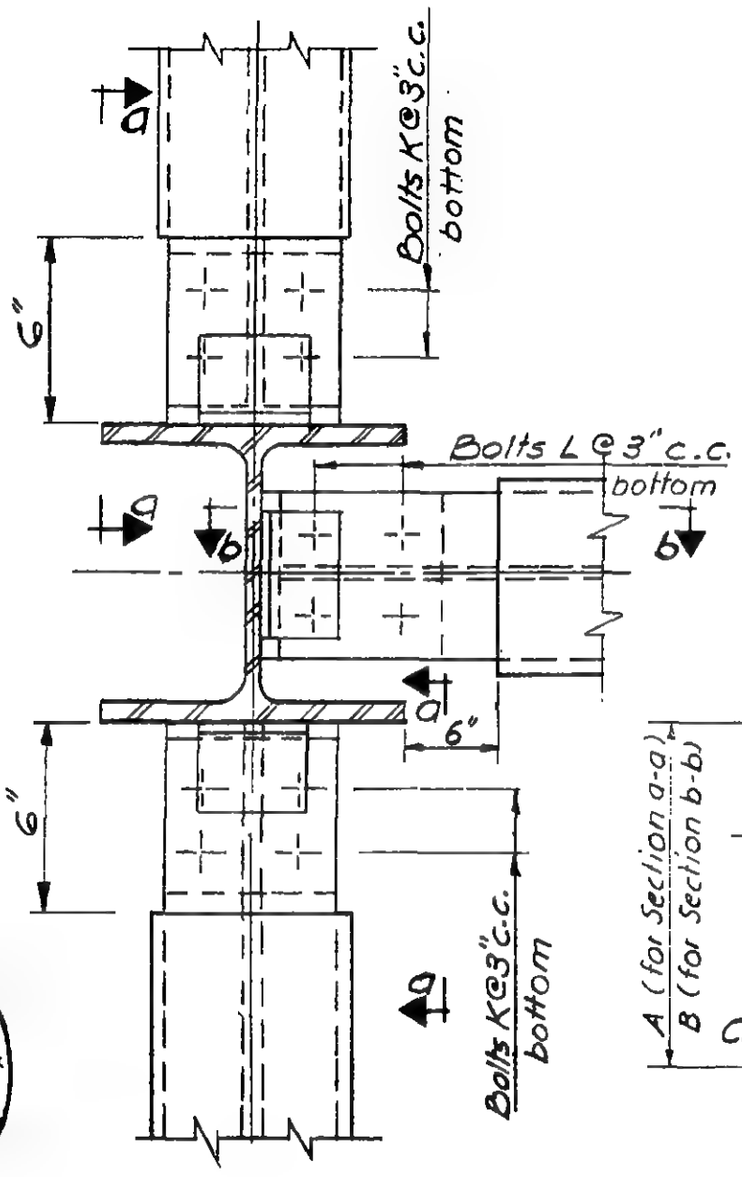

Plan

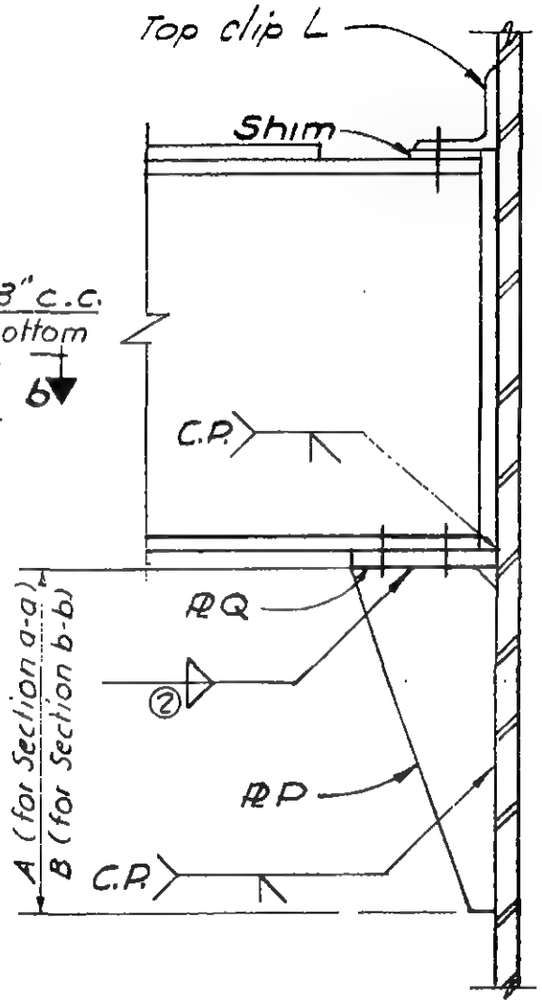

Section a-a
Section b-b

SCHEDULE 728		
	Section a-a	Section b-b
PLATES		
P	3/4"	3/4"
Q	3/4"	3/4"
DIMENSIONS		
A	1'-3"	—
B	—	1'-2"
BOLTS		
K	4 - 7/8" ϕ	
L		4 - 3/4" ϕ
WELDS		
②	5/16	5/16

SCHEDULE 728 A						
	Section a-a & Section b-b					
BEAM SIZE	PL P	PL Q	DIM. A	BOLTS K	BOLTS L	WELD ②
12 WF	1/2"	1/2"	1'-0"	4 - 7/8" ϕ	4 - 3/4" ϕ	5/16
14 WF	5/8"	5/8"	1'-2"	4 - 7/8" ϕ	4 - 3/4" ϕ	5/16
16 WF 36	3/4"	3/4"	1'-2"	4 - 7/8" ϕ	4 - 3/4" ϕ	5/16
16 WF 40	3/4"	3/4"	1'-2"	4 - 7/8" ϕ	4 - 3/4" ϕ	5/16
16 WF 45	3/4"	3/4"	1'-2"	4 - 7/8" ϕ	4 - 3/4" ϕ	5/16
18 WF 50	3/4"	3/4"	1'-6"	4 - 7/8" ϕ	4 - 3/4" ϕ	5/16
18 WF 55,60	3/4"	3/4"	1'-2"	4 - 7/8" ϕ	4 - 3/4" ϕ	5/16
18 WF 77	1"	1"	1'-4"	4 - 7/8" ϕ	4 - 3/4" ϕ	5/16
21 WF 55	3/4"	3/4"	1'-3"	4 - 7/8" ϕ	4 - 3/4" ϕ	5/16

LICENSED PROFESSIONAL ENGINEER
LESLIE E. ROBERTSON
No. 34360
UNIVERSITY OF THE STATE OF NEW YORK

6-ABI-295

SKILLING - HELLE - CHRISTIANSEN - ROBERTSON Structural & Civil Engineers

PROJECT THE WORLD TRADE CENTER | TITLE CONNECTION DETAIL 728B | DATE 2-9-68

REVISIONS

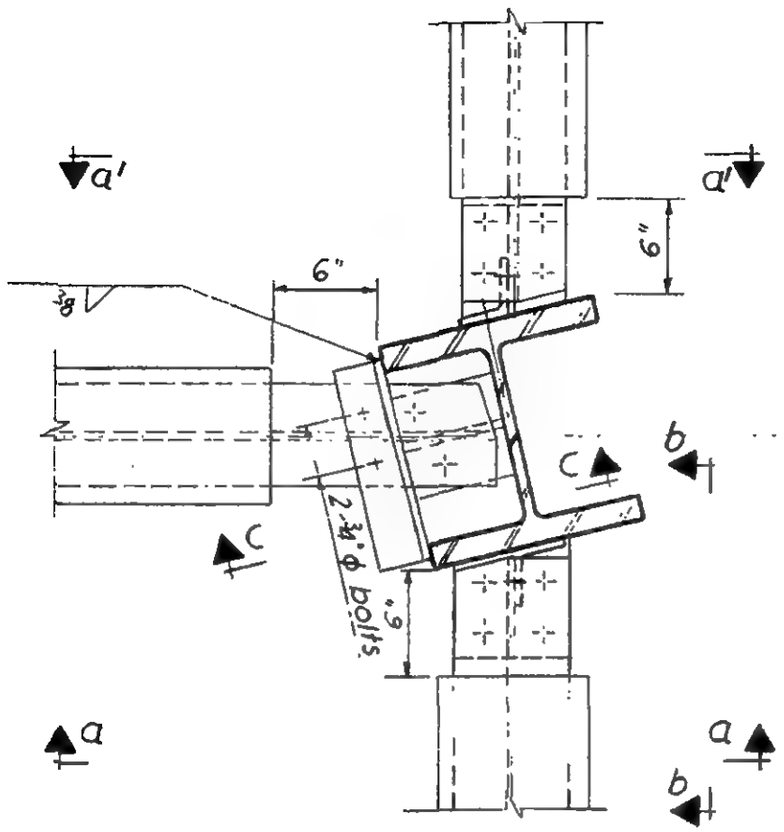

Plan

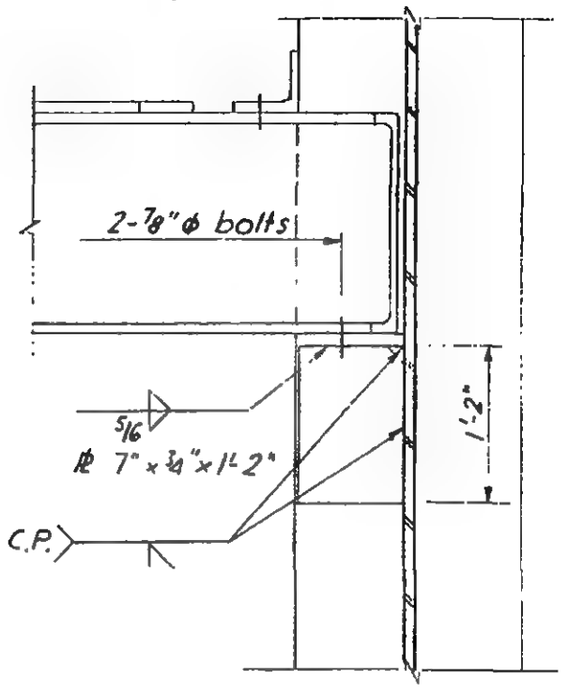

Section c-c

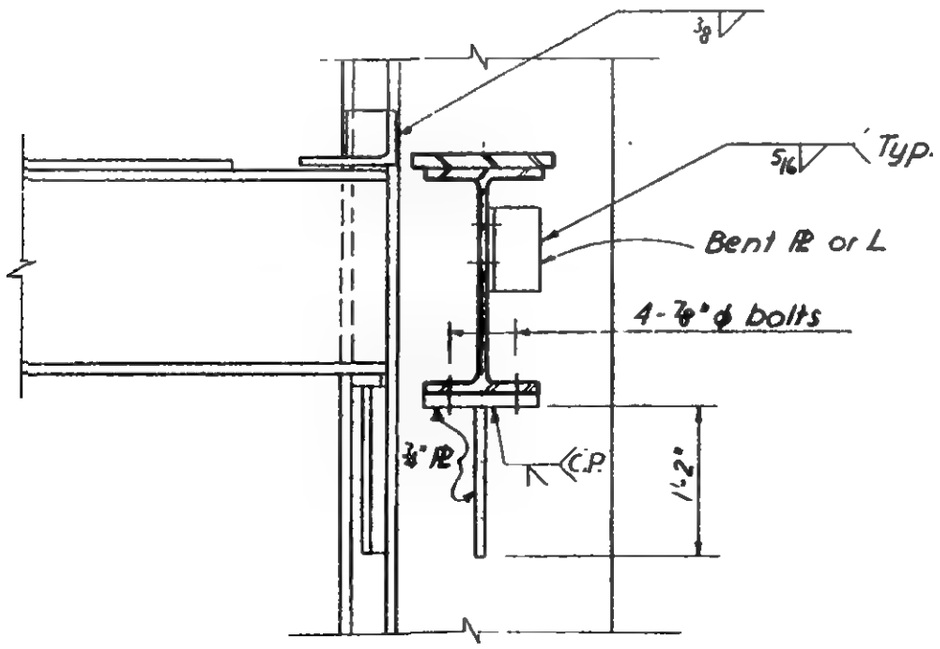

Section a-a
(a'-a' simular)

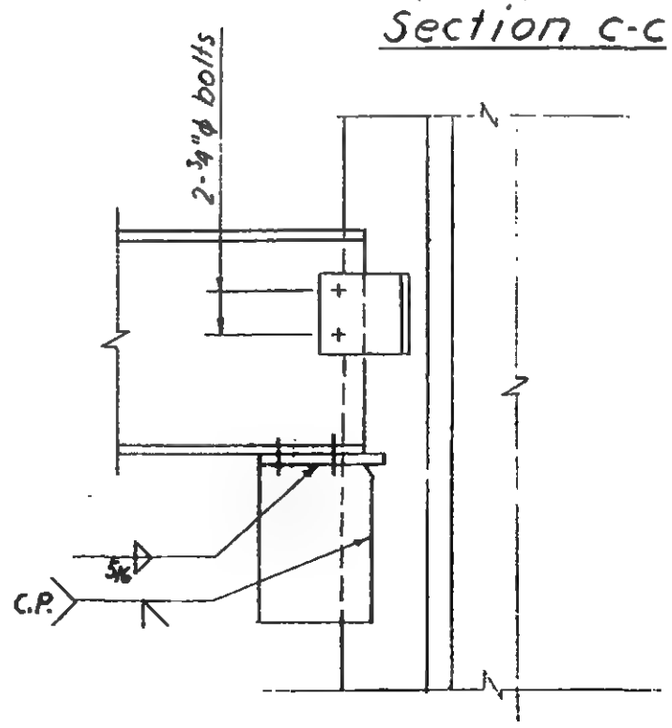

Section b-b

LICENSED PROFESSIONAL ENGINEER
LESLIE E. ROBERTSON
No. 34360
UNIVERSITY OF THE STATE OF NEW YORK

6-AB1-235.1

SKILLING - HELLE - CHRISTIANSEN - ROBERTSON Structural & Civil Engineers

PROJECT THE WORLD TRADE CENTER | TITLE CONNECTION DETAIL 729, 729 A | DATE 8-14-67

REVISIONS

2-9-68

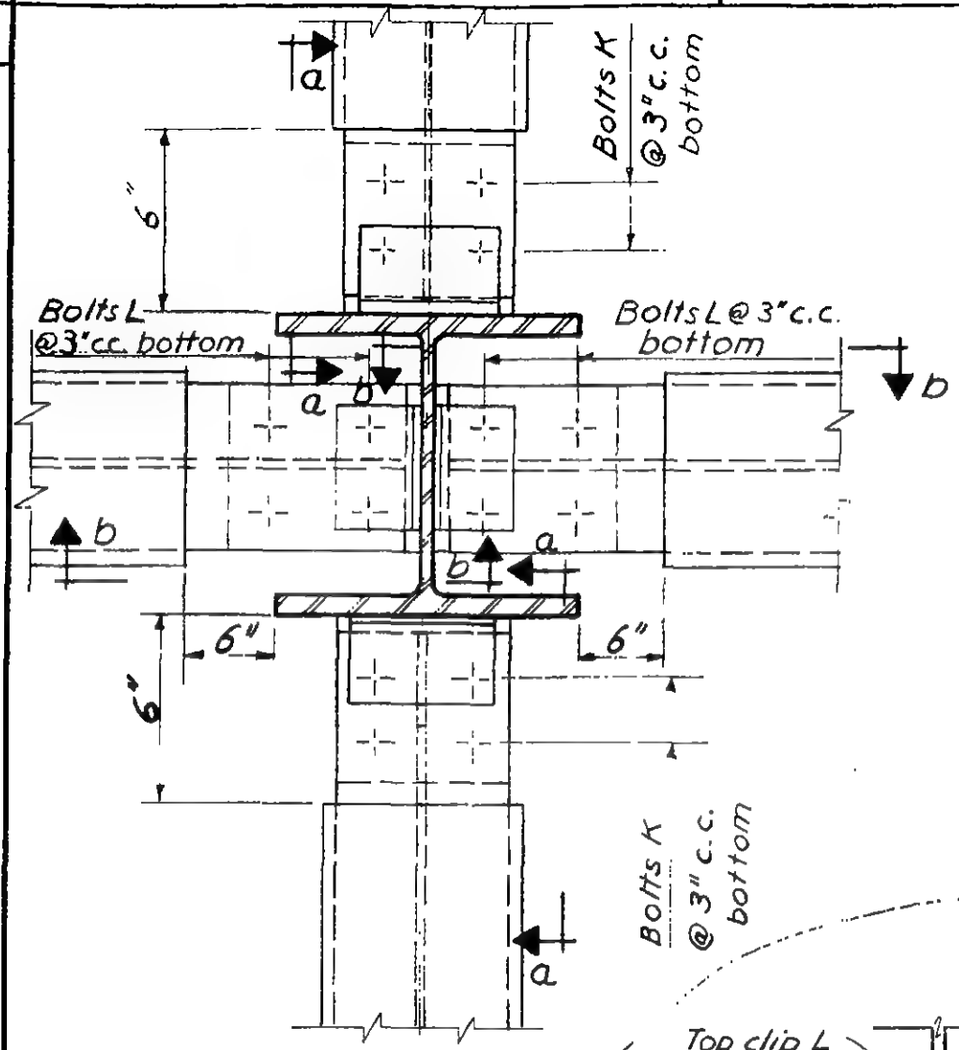

Plan

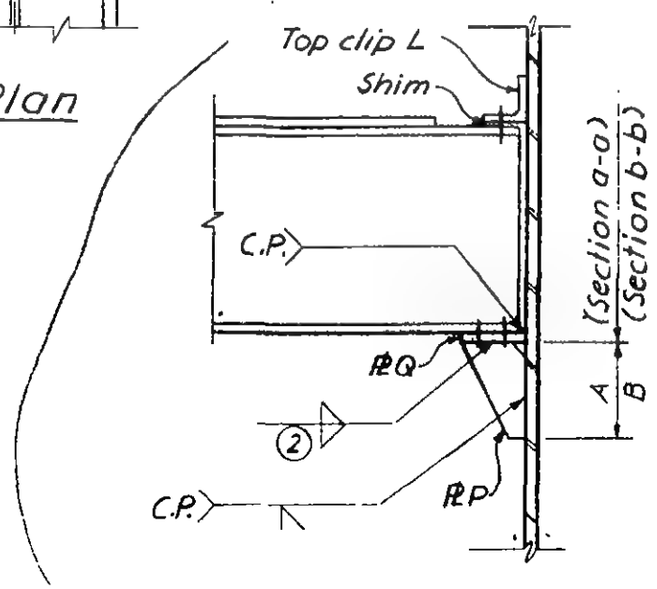

Section a-a
Section b-b

SCHEDULE 729 A

BEAM SIZE	Section a-a & Section b-b ℄ P	℄ Q	DIM. A	BOLTS K	BOLTS L	WELD ②
12 WF	1/2"	1/2"	1'-0"	4 - 7/8" ϕ	4 - 3/4" ϕ	5/16
14 WF	5/8"	5/8"	1'-2"	4 - 7/8" ϕ	4 - 3/4" ϕ	5/16
16 WF	3/4"	3/4"	1'-2"	4 - 7/8" ϕ	4 - 3/4" ϕ	5/16
18 WF 45	3/4"	3/4"	1'-2"	4 - 7/8" ϕ	4 - 3/4" ϕ	5/16
18 WF 50 to 18 WF 85	3/4"	3/4"	1'-6"	4 - 7/8" ϕ	4 - 3/4" ϕ	5/16

SCHEDULE 729

	Section a-a	Section b-b
PLATES		
P	3/4"	3/4"
Q	3/4"	3/4"
DIMENSIONS		
A	1'-2"	—
B	—	1'-2"
BOLTS		
K	4 - 1 1/8" ϕ	—
L	—	4 - 3/4" ϕ
WELDS		
②	5/16	5/16

REGISTERED PROFESSIONAL ENGINEER
LESLIE E. ROBERTSON
No. 34360
UNIVERSITY OF THE STATE OF NEW YORK

6-AB1-236

SKILLING - HELLE - CHRISTIANSEN - ROBERTSON Structural & Civil Engineers

PROJECT THE WORLD TRADE CENTER | TITLE CONNECTION DETAIL 730 | DATE 8-14-67

REVISIONS

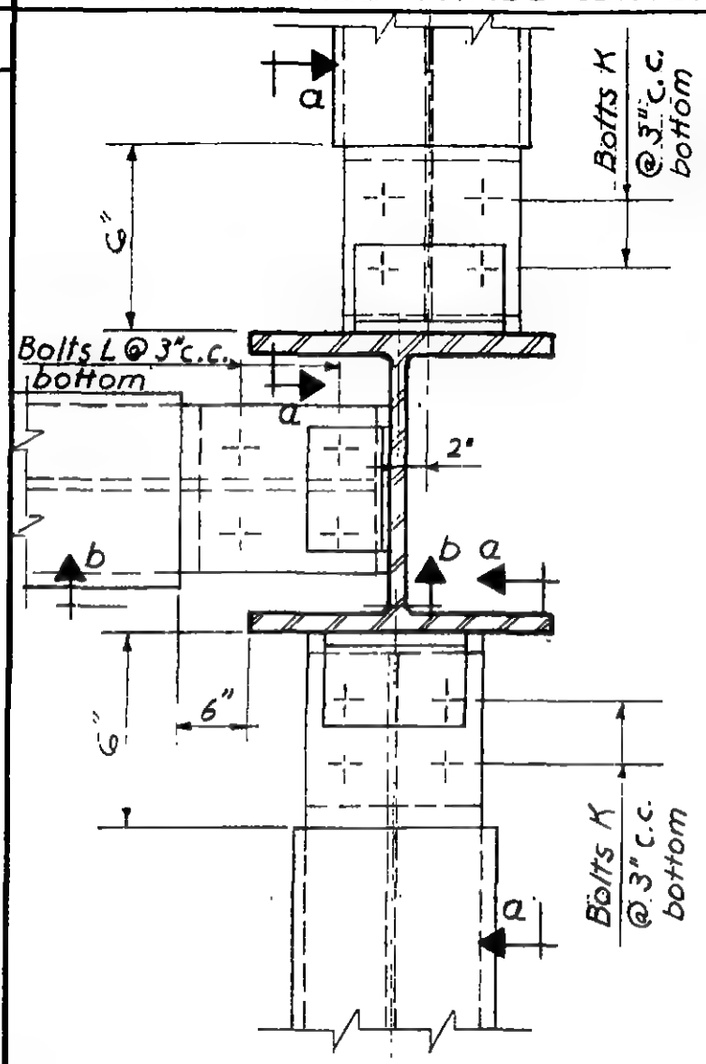

Plan

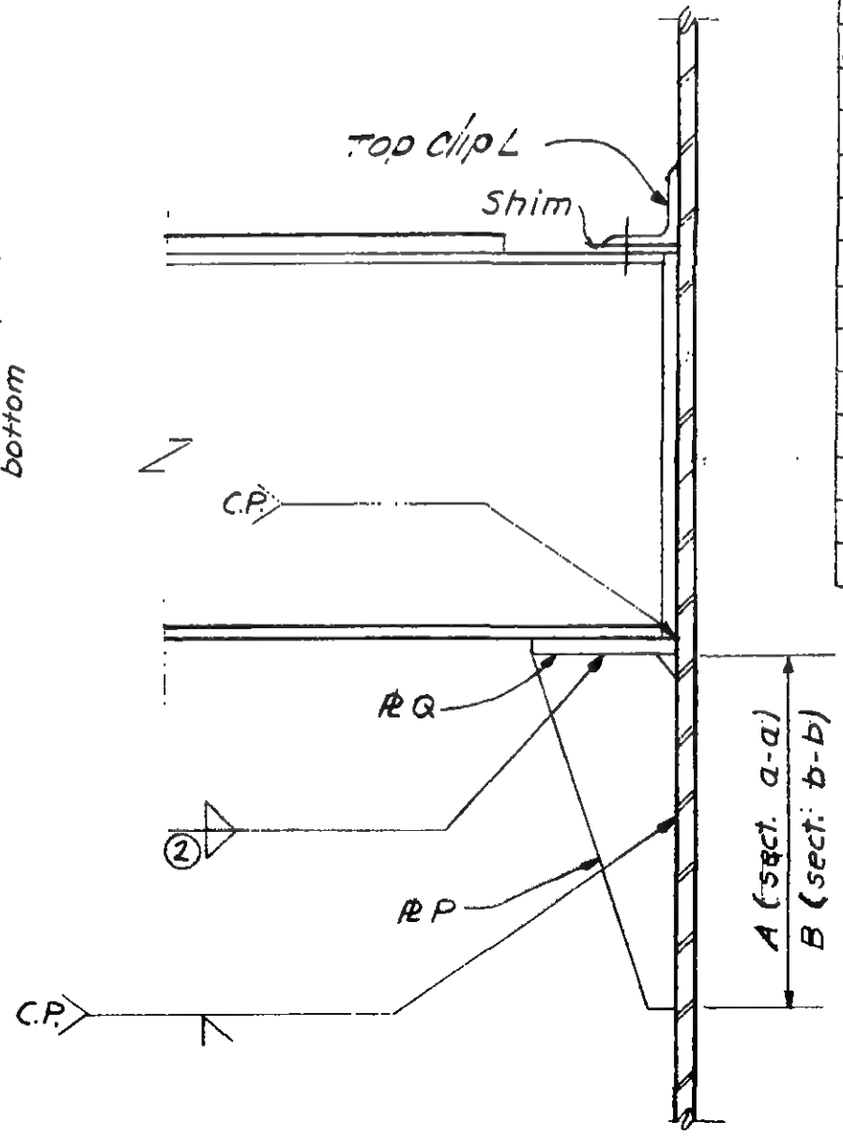

Section a-a
Section b-b

SCHEDULE		
	Sect. a-a	Sect. b-b
PLATES		
P	3/4"	3/4"
Q	3/4"	3/4"
DIMENSIONS		
A	1'-3"	—
B	—	1'-2"
BOLTS		
K	4 - 7/8" ϕ	—
L	—	4 - 3/4" ϕ
WELDS		
②	5/16	5/16

REGISTERED PROFESSIONAL ENGINEER LESLIE E. ROBERTSON No. 34360 STATE OF NEW YORK

6-AB1-237

SKILLING - HELLE - CHRISTIANSEN - ROBERTSON Structural & Civil Engineers

PROJECT THE WORLD TRADE CENTER | TITLE CONNECTION DETAIL 731, 731A | DATE 8-14-67

REVISIONS

2-9-68

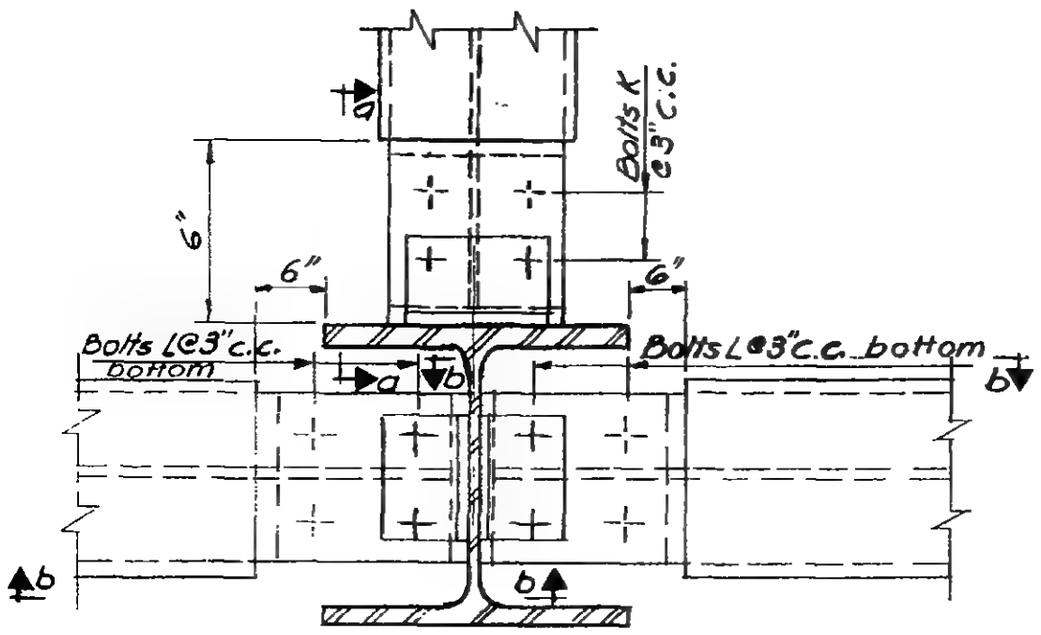

Plan

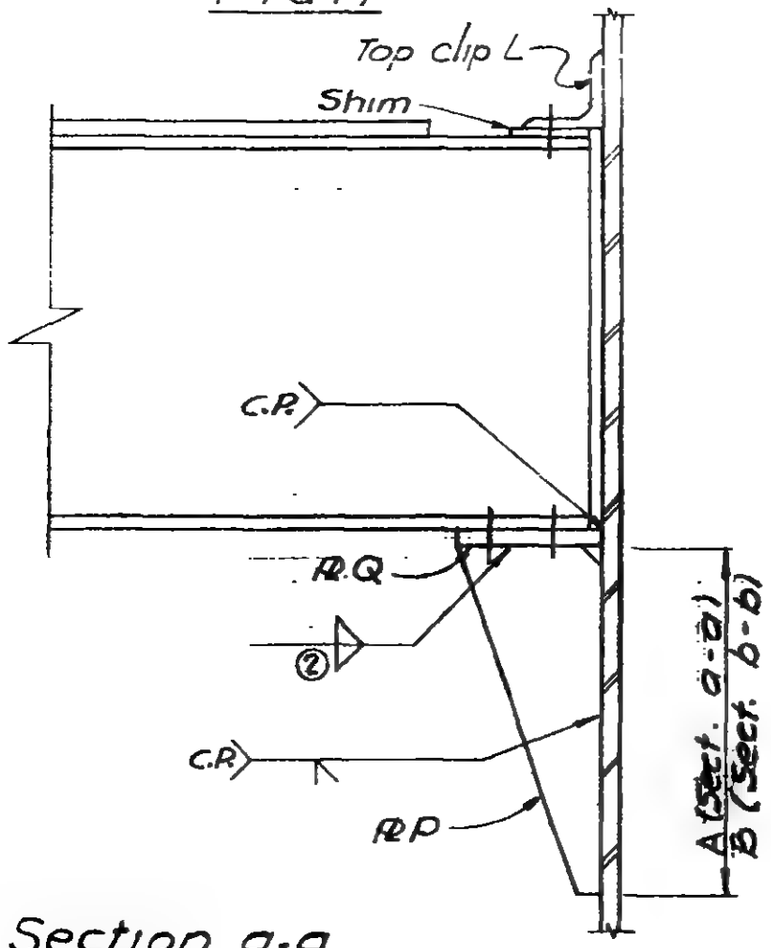

Section a-a
Section b-b

SCHEDULE 731		
	Section a-a	Section b-b
PLATES		
P	7/8"	3/4"
Q	7/8"	3/4"
DIMENSIONS		
A	1'-5"	—
B	—	1'-2"
BOLTS		
K	4 - 7/8" ϕ	—
L	—	4 - 3/4" ϕ
WELDS		
②	5/16	5/16

SCHEDULE 731A						
	Section a-a & Section b-b					
BEAM SIZE	PL P	PL Q	DIM. A	BOLTS K	BOLTS L	WELD ②
14 WF	5/8"	5/8"	1'-2"	4-7/8" ϕ	4-3/4" ϕ	5/16
16 WF	3/4"	3/4"	1'-2"	4-7/8" ϕ	4-3/4" ϕ	5/16
18 WF 55	3/4"	3/4"	1'-2"	4-7/8" ϕ	4-3/4" ϕ	5/16
18 WF 60 - 18 WF 77	3/4"	3/4"	1'-6"	4-7/8" ϕ	4-3/4" ϕ	5/16

LICENSED PROFESSIONAL ENGINEER LESLIE E. ROBERTS No. 34360 UNIVERSITY OF THE STATE OF N.Y.

6-ABI-238

SKILLING - HELLE - CHRISTIANSEN - ROBERTSON Structural & Civil Engineers

PROJECT THE WORLD TRADE CENTER | TITLE CONNECTION DETAIL 732 | DATE 8-14-67

REVISIONS

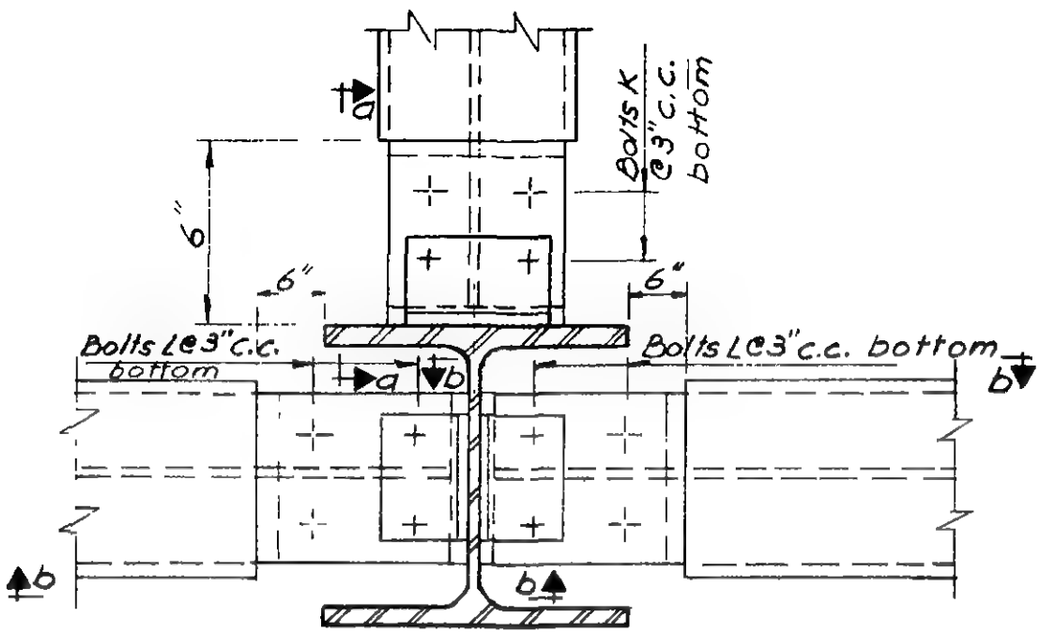

Plan

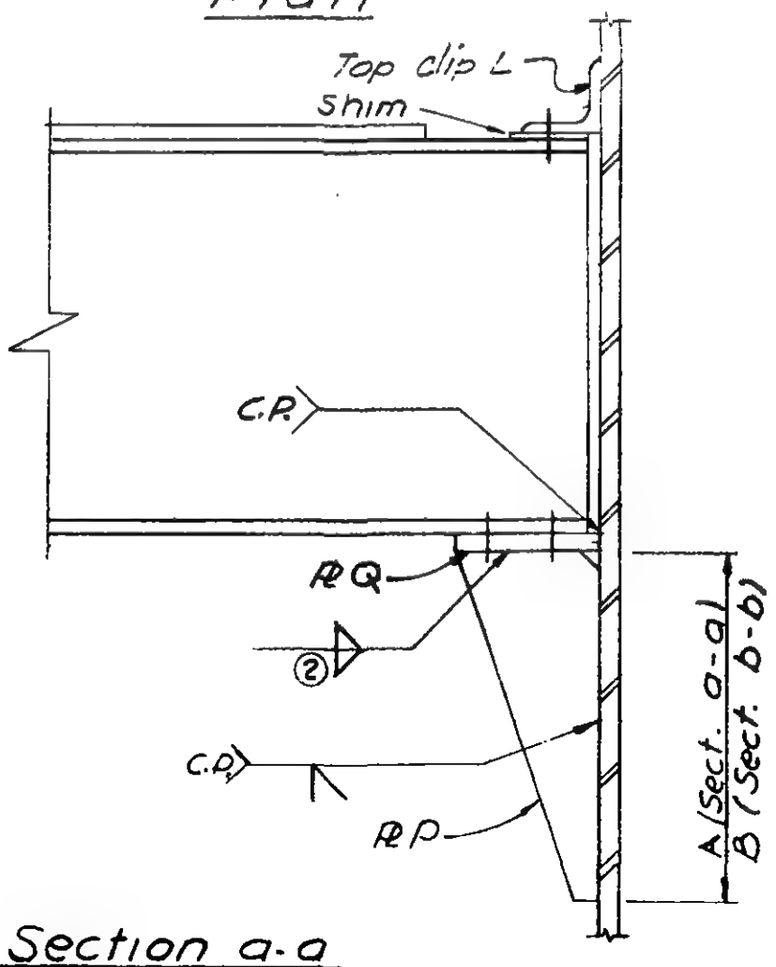

Section a-a
Section b-b

SCHEDULE

	Section a-a	Section b-b
PLATES		
P	3/4"	3/4"
Q	3/4"	3/4"
DIMENSIONS		
A	1'-3"	—
B	—	1'-5"
BOLTS		
K	4-7/8"ϕ	—
L	—	4-3/4"ϕ
WELDS		
②	5/16	5/16

LICENSED PROFESSIONAL ENGINEER LESLIE E. ROBERTS

G-ABI-239

SKILLING - HELLE - CHRISTIANSEN - ROBERTSON Structural & Civil Engineers

PROJECT THE WORLD TRADE CENTER | TITLE CONNECTION DETAIL 733 A, B & C | DATE 8-14-67

REVISIONS
2-9-68
7-17-68

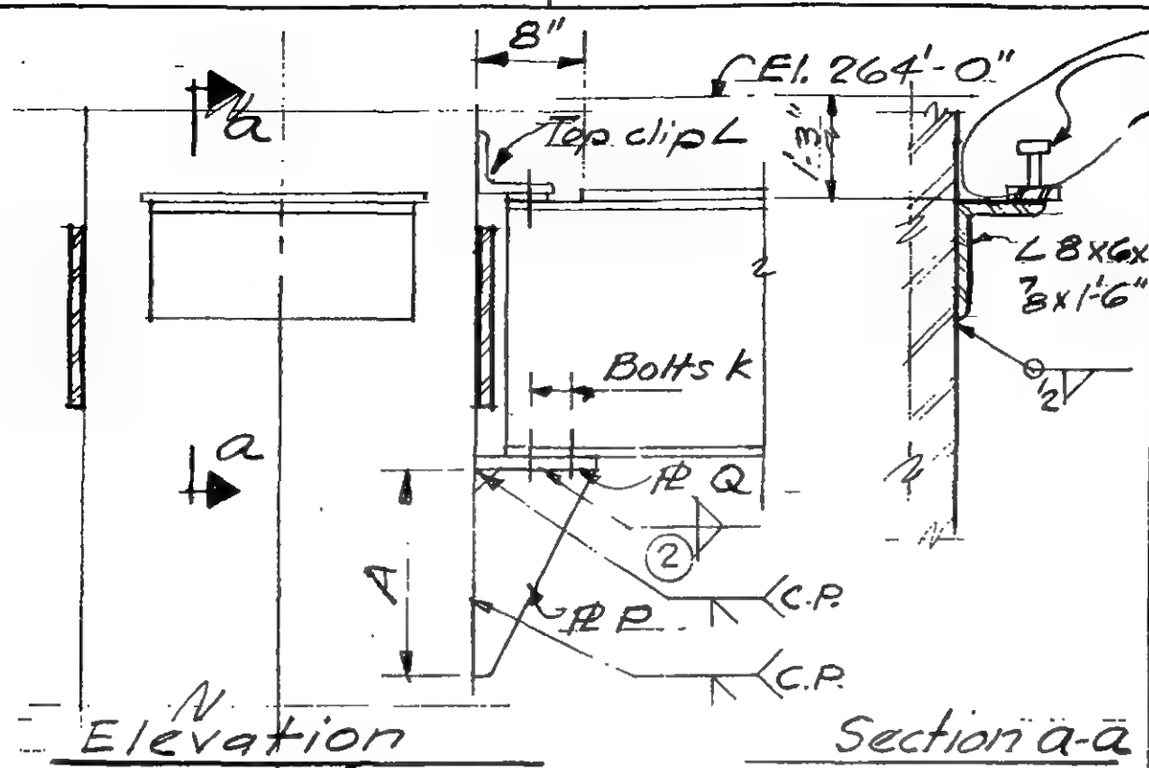

Elevation

Section a-a

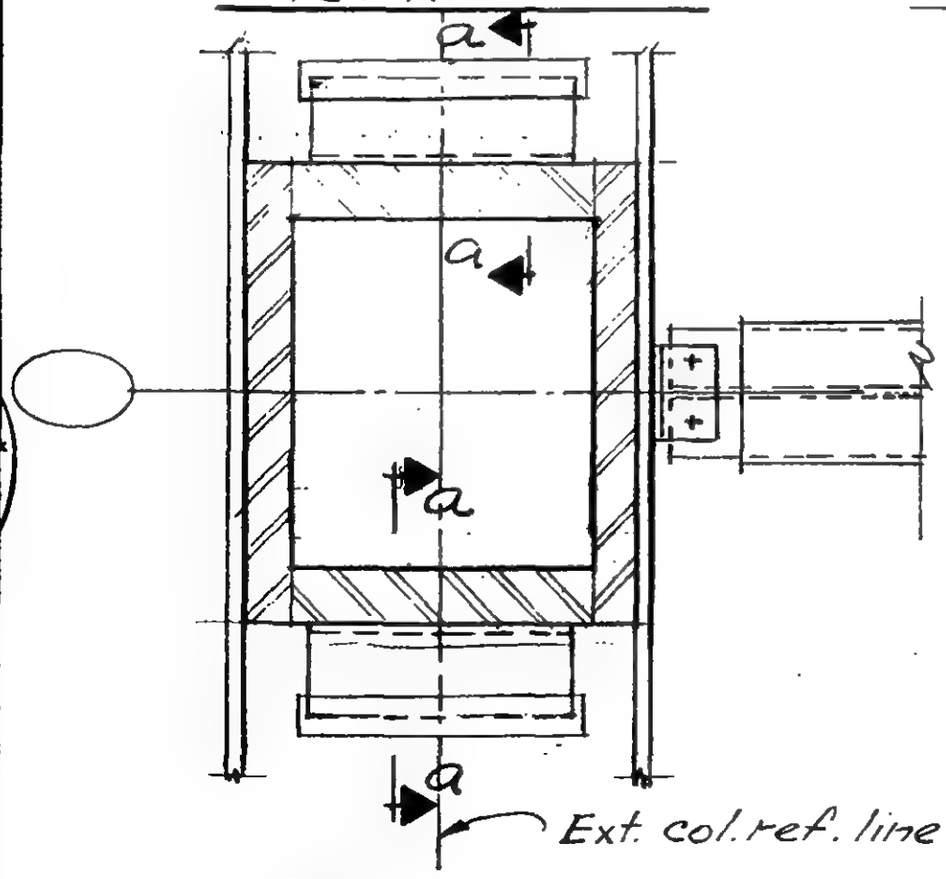

Plan

SCHEDULE

	733 A	733 B	733 C
PLATES			
P	5/8"	3/4"	3/4"
Q	5/8"	3/4"	3/4"
DIMENSIONS			
A	1'-4"	1'-4"	1'-6"
BOLTS			
K	4 - 1 1/8" ϕ	4 - 7/8" ϕ	4 - 1 1/8" ϕ
WELDS			
②	5/16	5/16	5/16

SLIDE PLATE SCHEDULE	
TOWER	COLS. WHERE USED
A	159, 201
B	148 thru 159 201 thru 259 301 thru 312 401 thru 445

LICENSED PROFESSIONAL ENGINEER
LESLIE E. ROBERTSON
No. 34360
UNIVERSITY OF THE STATE OF NEW YORK

6-AB1-240

SKILLING - HELLE - CHRISTIANSEN - ROBERTSON Structural & Civil Engineers

PROJECT THE WORLD TRADE CENTER | TITLE CONNECTION DETAIL 734 A & B | DATE 8-14-67

REVISIONS

7-17-68

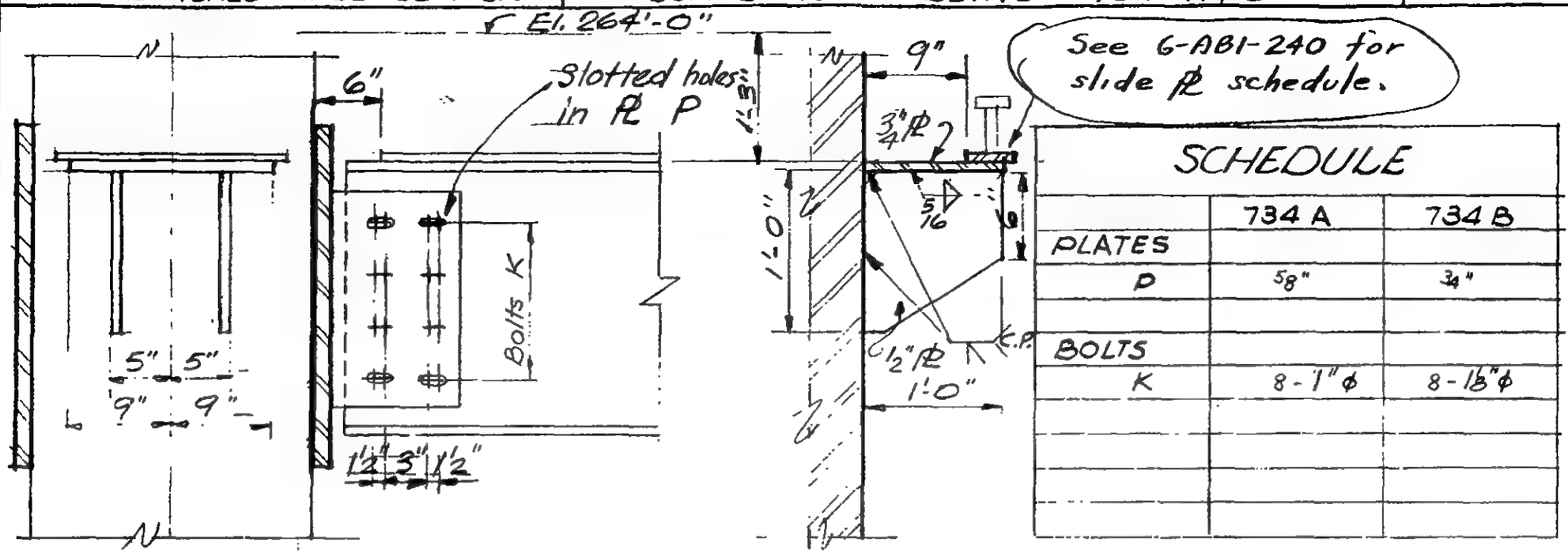

See G-AB1-240 for slide ℄ schedule.

SCHEDULE

	734 A	734 B
PLATES		
P	5/8"	3/4"
BOLTS		
K	8 - 1" ϕ	8 - 1⅛" ϕ

Elevation

Section b-b

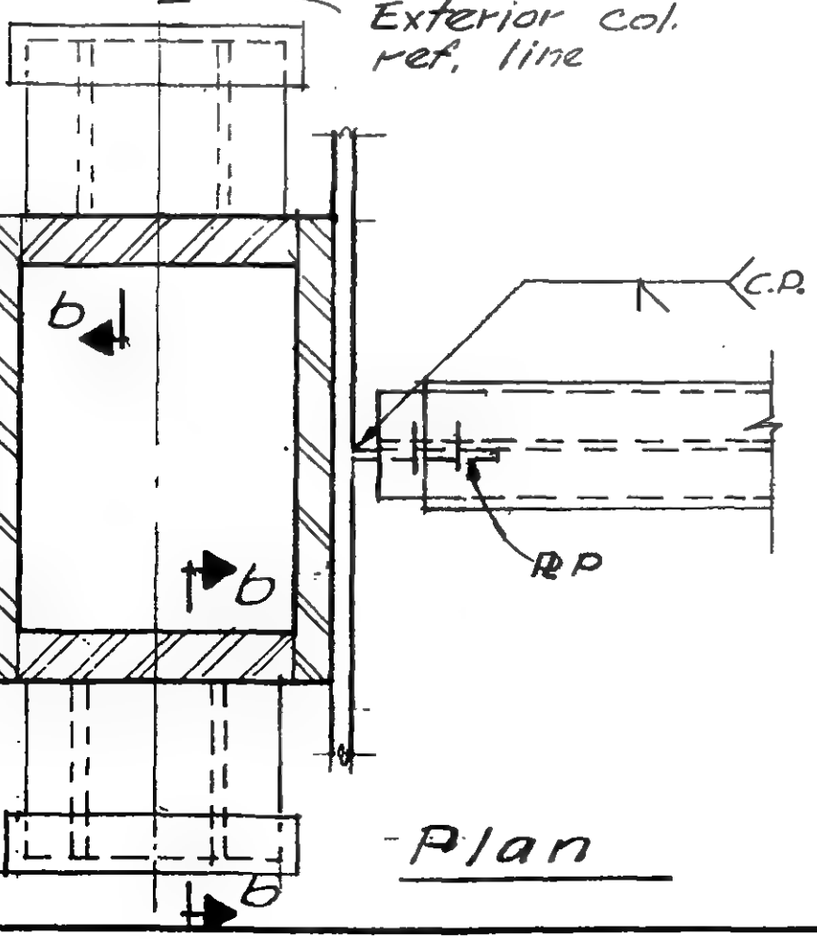

Plan

6-AB1-241

SKILLING - HELLE - CHRISTIANSEN - ROBERTSON Structural & Civil Engineers

PROJECT THE WORLD TRADE CENTER | TITLE CONNECTION DETAIL 735 A, B, C | DATE 8-14-67

REVISIONS

2-9-68

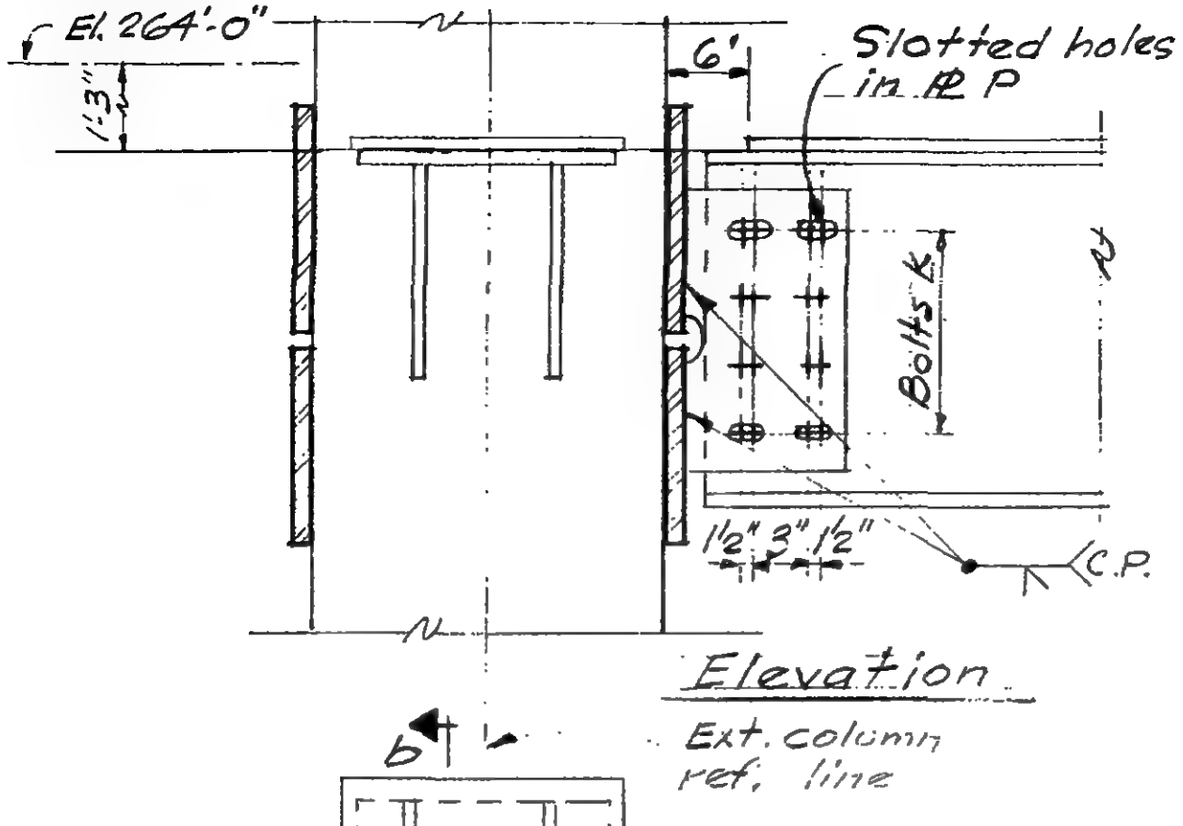

Elevation

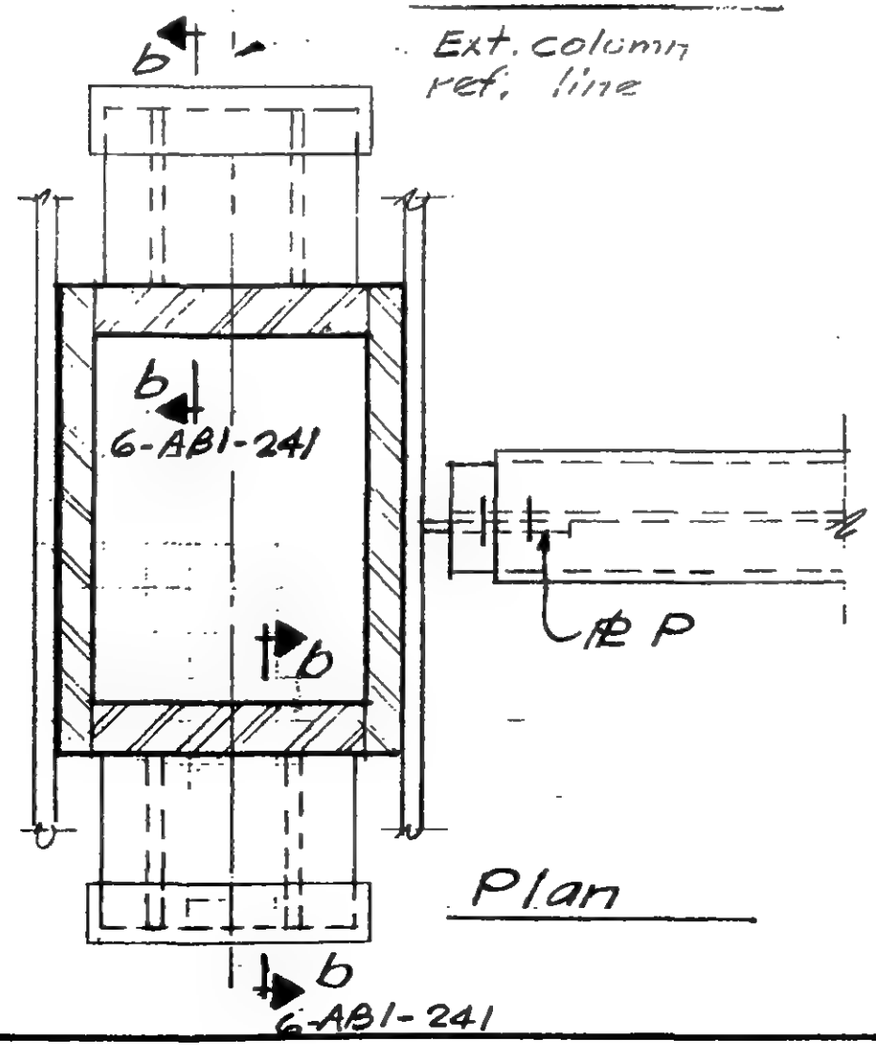

Plan

SCHEDULE			
	735 A	735 B	735 C
PLATES			
P	5/8"	3/4"	7/8"
BOLTS			
K	8-1"ϕ	8-1⅛"ϕ	10-1"ϕ

LICENSED PROFESSIONAL ENGINEER LESLIE E. ROBERTSON No. 34360 UNIVERSITY OF THE STATE OF NEW YORK

6-AB1.242

SKILLING - HELLE - CHRISTIANSEN - ROBERTSON Structural & Civil Engineers

PROJECT THE WORLD TRADE CENTER | TITLE CONNECTION DETAIL 736; 736 B,C,D | DATE 8-14-67

REVISIONS

2-9-68

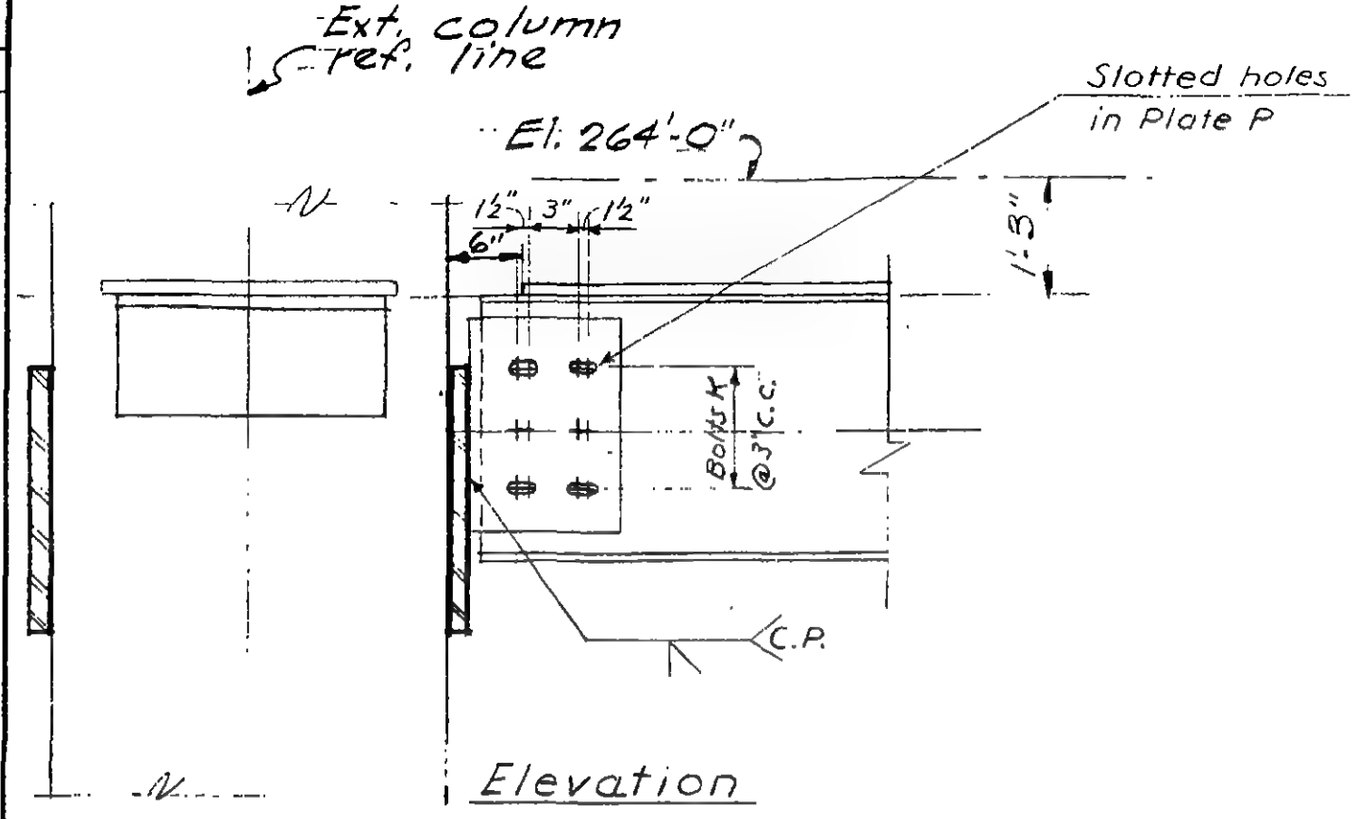

Elevation

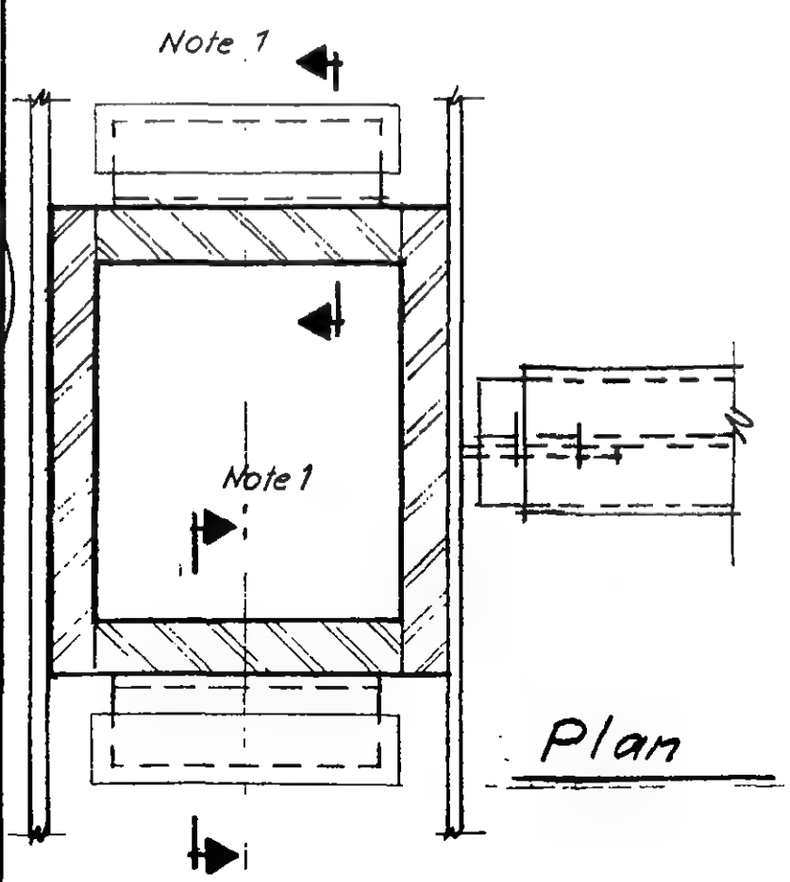

Plan

SCHEDULE			
PLATES	736	736 B&C	736 D
P	¾"	¾"	¾"
BOLTS			
K	6-1"ϕ	10-1⅛"ϕ	8-1"ϕ

Note 1 : Section a-a (1-AB3-1) where no bracing member "6"
Section b-b (1-AB3-2) at bracing members "6".

LICENSED PROFESSIONAL ENGINEER
LESLIE E. ROBERTSON
No. 34360
UNIVERSITY OF THE STATE OF NEW YORK

6-AB1-243

SKILLING - HELLE - CHRISTIANSEN - ROBERTSON Structural & Civil Engineers

PROJECT THE WORLD TRADE CENTER | TITLE CONNECTION DETAIL 737, 737A | DATE 8-14-67

REVISIONS

7-17-68

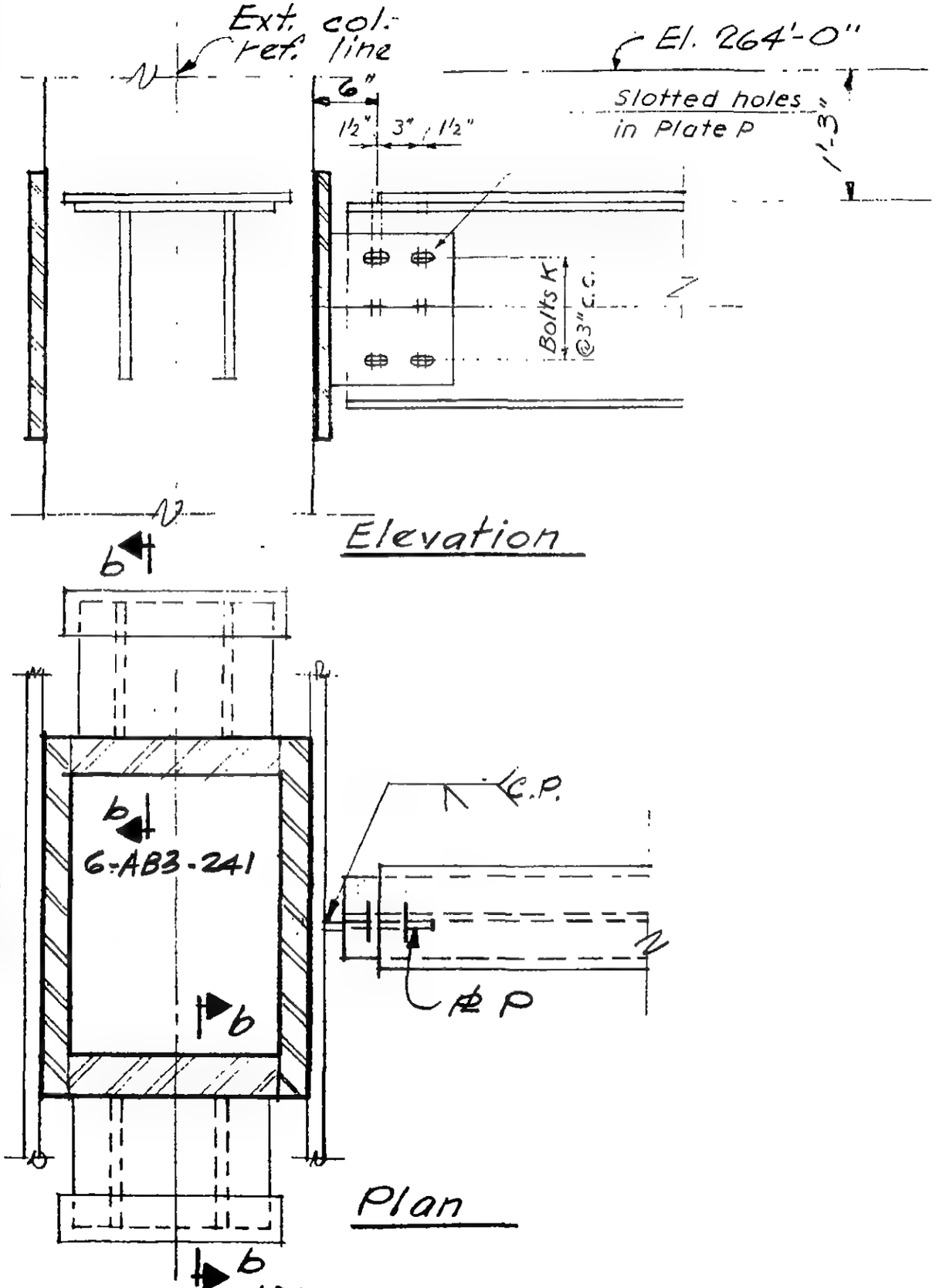

SCHEDULE	737	737A
PLATES		
P	⅝"	⅝"
BOLTS		
K	6-⅞"ø	6-1"ø

LICENSED PROFESSIONAL ENGINEER LESLIE E. ROBERTSON No. 34360 UNIVERSITY OF THE STATE OF NEW YORK

6-AB1-244

SKILLING - HELLE - CHRISTIANSEN - ROBERTSON Structural & Civil Engineers

PROJECT THE WORLD TRADE CENTER | TITLE CONNECTION DETAIL 738 | DATE 8-14-67

REVISIONS

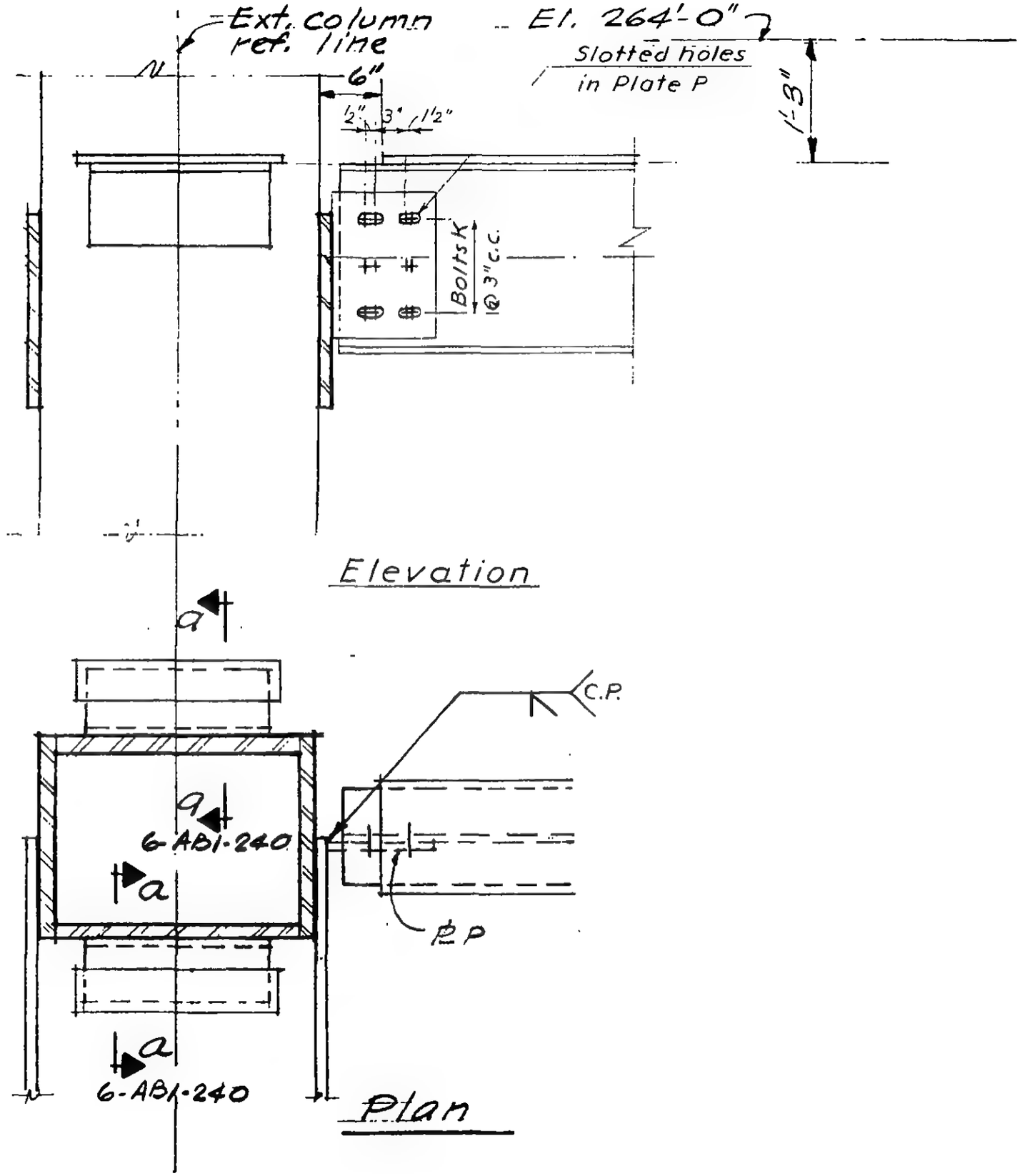

SCHEDULE	
PLATES	
P	¾"
BOLTS	
K	6 - 1"ϕ

LICENSED PROFESSIONAL ENGINEER
LESLIE E. ROBERTSON
No. 34360
UNIVERSITY OF THE STATE OF NEW YORK

6-AB1-245

SKILLING - HELLE - CHRISTIANSEN - ROBERTSON Structural & Civil Engineers

PROJECT THE WORLD TRADE CENTER | TITLE CONNECTION DETAIL 739 | DATE 8-14-67

REVISIONS

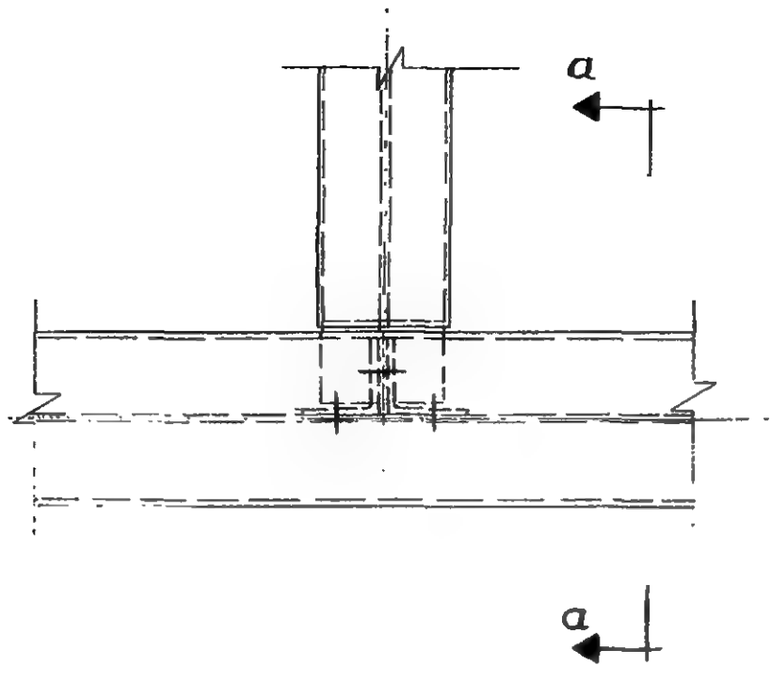

Plan

SCHEDULE	
ANGLES	
R	2-4 x 3½ x 7/16 x 0'-8½"
BOLTS	
K	3-1" ϕ
L	3-1" ϕ

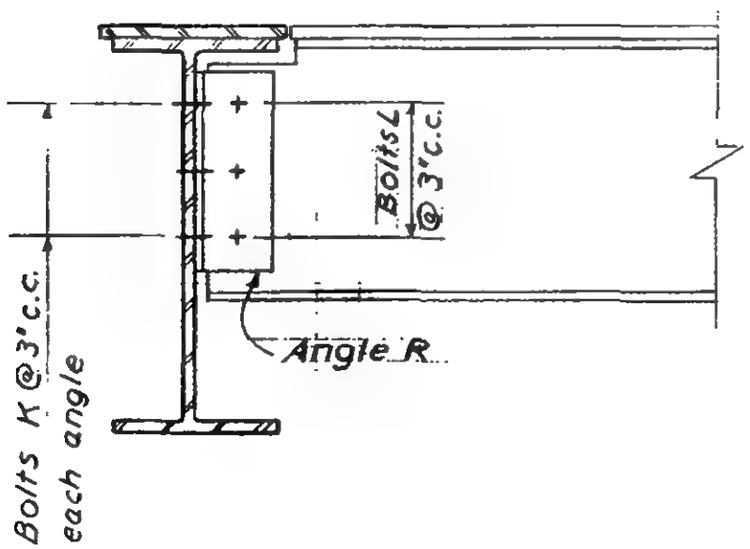

Section a-a

LICENSED PROFESSIONAL ENGINEER
LESLIE E. ROBERTSON
No. 34360
UNIVERSITY OF THE STATE OF NEW YORK

6-ABI-246

SKILLING - HELLE - CHRISTIANSEN - ROBERTSON Structural & Civil Engineers

PROJECT THE WORLD TRADE CENTER | TITLE CONNECTION DETAIL 740 | DATE 8-14-67

REVISIONS

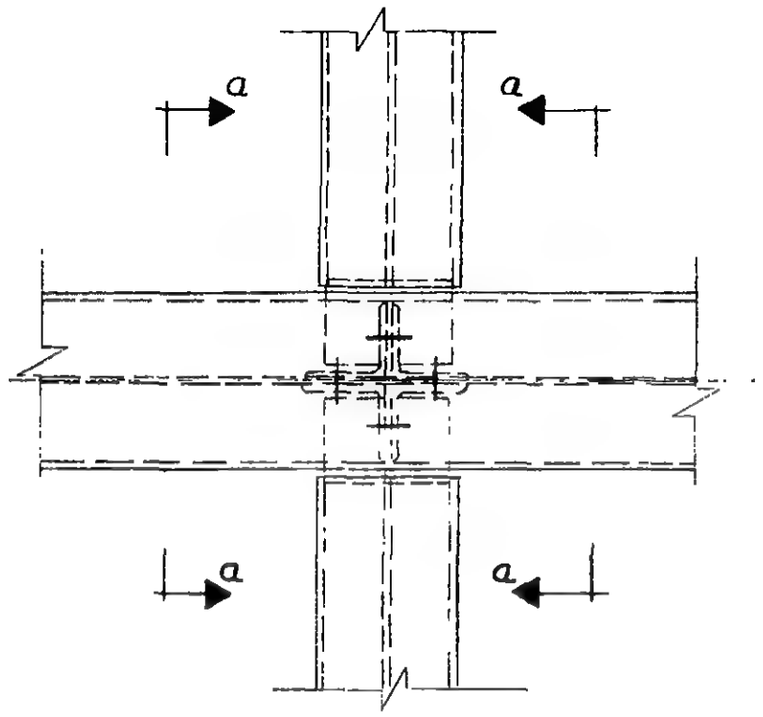

Plan

SCHEDULE	
ANGLES	
R	4-4x3½x⅜x0'-11½"
BOLTS	
K	4 - ⅞" ϕ

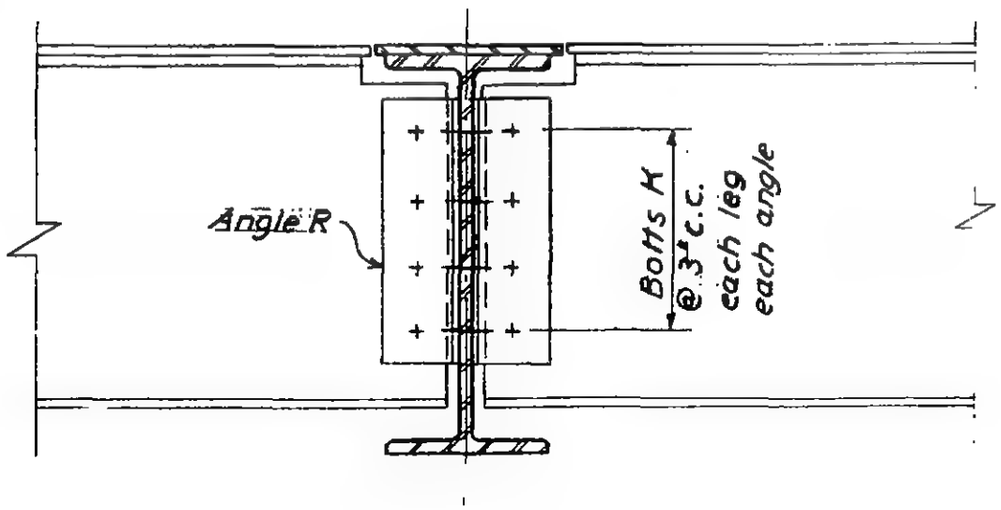

Section a-a

LICENSED PROFESSIONAL ENG'INEER
LESLIE E. ROBERTSON
No. 34360
UNIVERSITY OF THE STATE OF NEW YORK

6-ABI-247

SKILLING - HELLE - CHRISTIANSEN - ROBERTSON Structural & Civil Engineers

PROJECT THE WORLD TRADE CENTER | TITLE CONNECTION DETAIL 750 A,B | DATE 8-14-67

REVISIONS

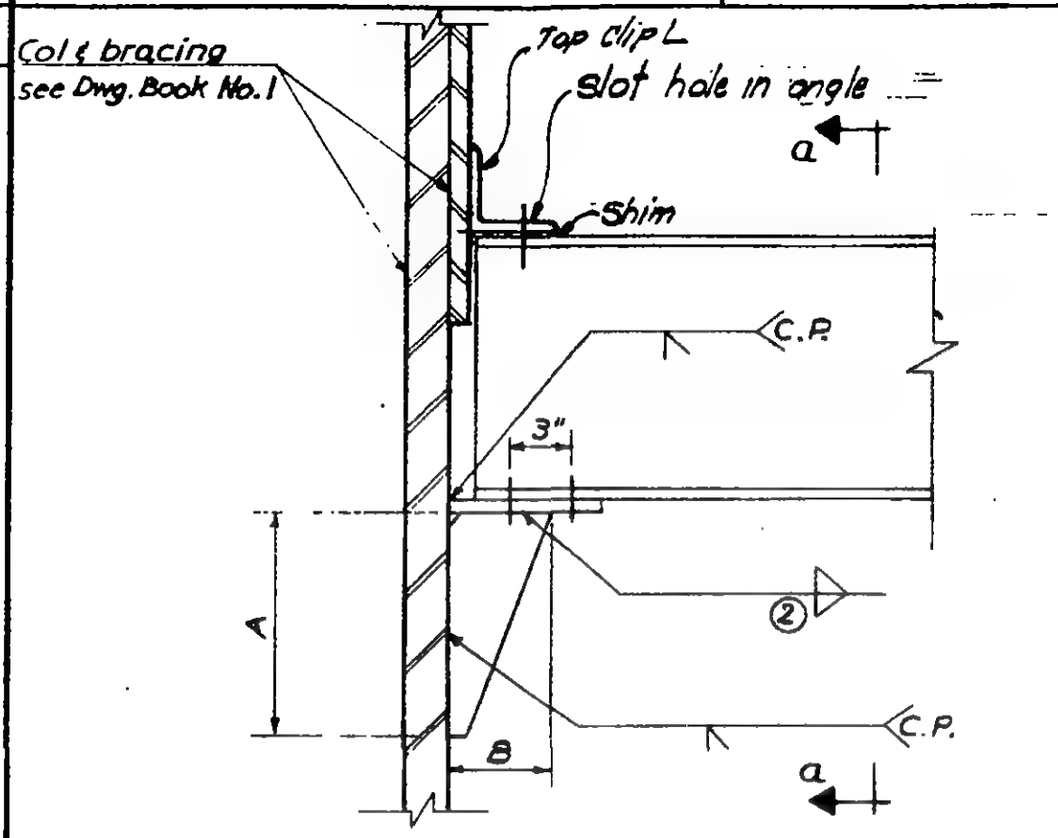

Elevation

SCHEDULE		
	750 A	750 B
PLATES		
P	½"	½"
Q	½"	½"
DIMENSIONS		
A	0'-10"	0'-0"
B	0'-6"	0'-6"
BOLTS		
K	4 - ¾" ϕ	4 - ⅞" ϕ
WELDS		
②	5/16	5/16

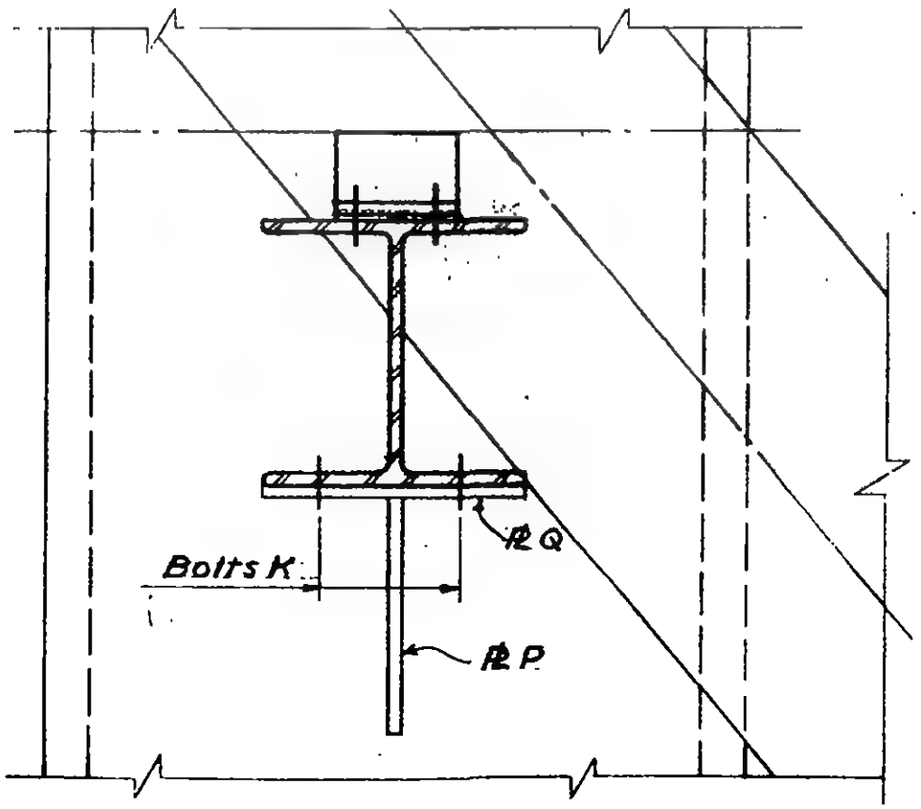

Section a-a

LICENSED PROFESSIONAL ENGINEER
LESLIE E. ROBERTSON
No. 34360
UNIVERSITY OF THE STATE OF NEW YORK

6-ABI-268

SKILLING - HELLE - CHRISTIANSEN - ROBERTSON Structural & Civil Engineers

PROJECT THE WORLD TRADE CENTER | TITLE CONNECTION DETAIL 751 A, B, C, D, E, F | DATE 8-14-67

REVISIONS
2-9-68

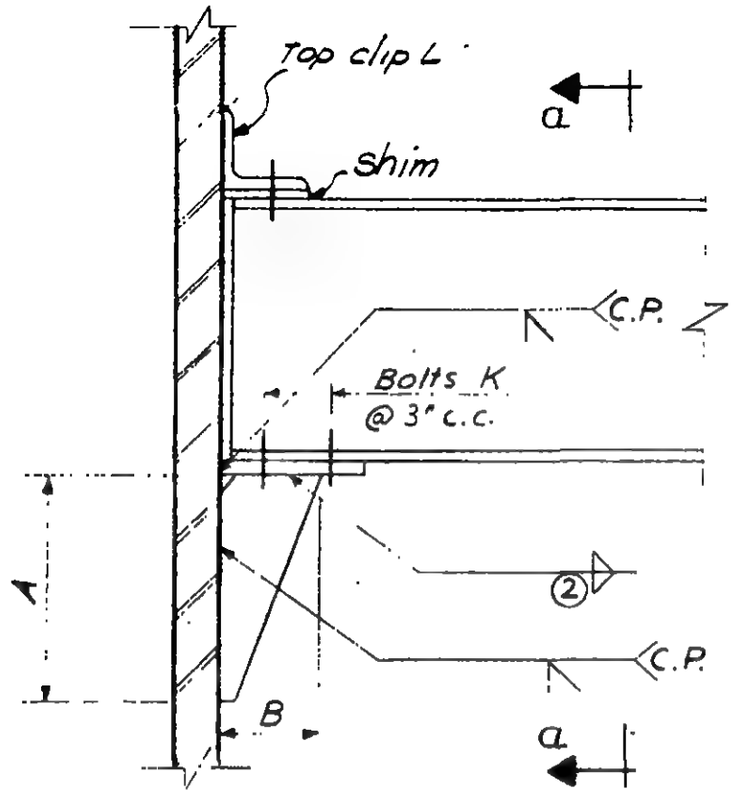

Elevation

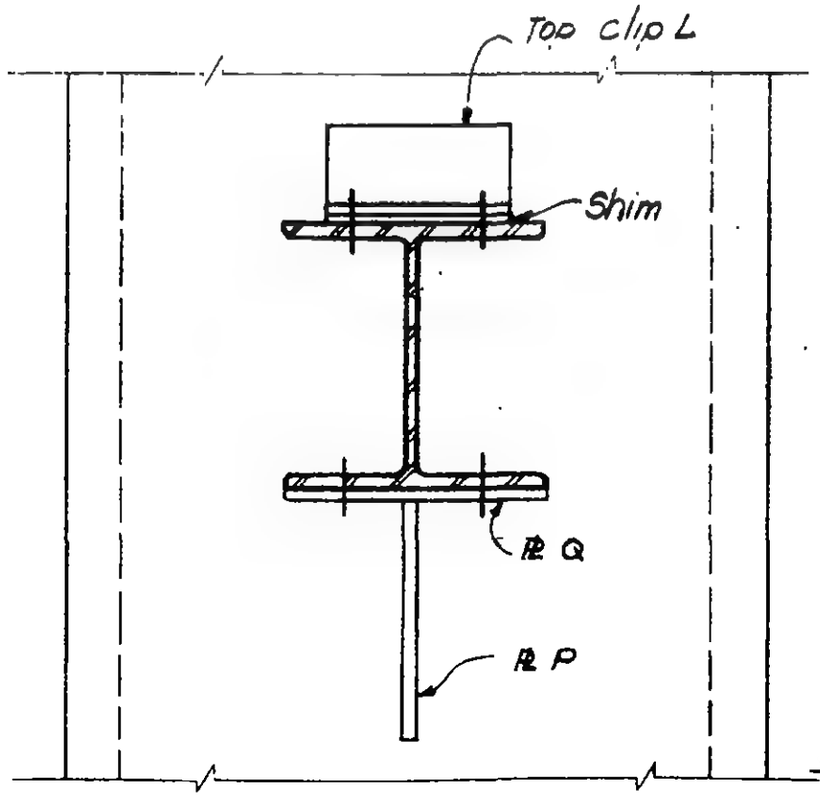

Section a-a

See 1-AB3-249.1 for Plan 751 D

SCHEDULE

	751 A	751 B,D,F	751 C,E
PLATES			
P	½"	½"	1"
Q	½"	½"	1"
DIMENSIONS			
A	0'-10"	1'-0"	1'-2"
B	0'-4½"	0'-4½"	0'-6"
BOLTS			
K	4 - ⅞" ϕ	4 - 1⅛" ϕ	4 - ⅞" ϕ
WELDS			
②	5/16	5/16	- 3/8

LICENSED PROFESSIONAL ENGINEER
LESLIE E. ROBERTSON
No. 34360
UNIVERSITY OF THE STATE OF NEW YORK

6-AB1-249

SKILLING - HELLE - CHRISTIANSEN - ROBERTSON Structural & Civil Engineers

PROJECT THE WORLD TRADE CENTER | TITLE CONNECTION DETAIL 751D | DATE 2-9-68

REVISIONS

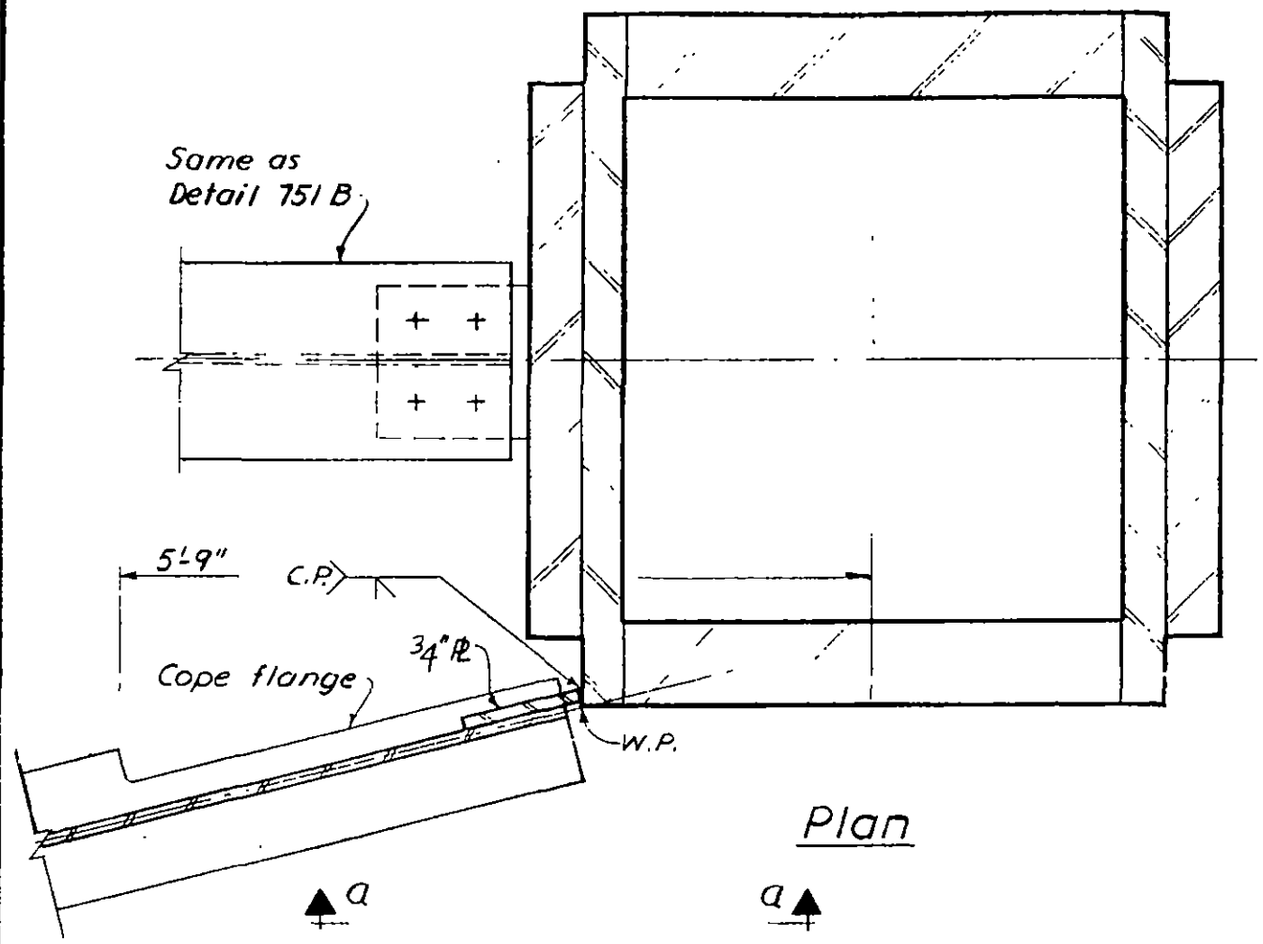

Plan

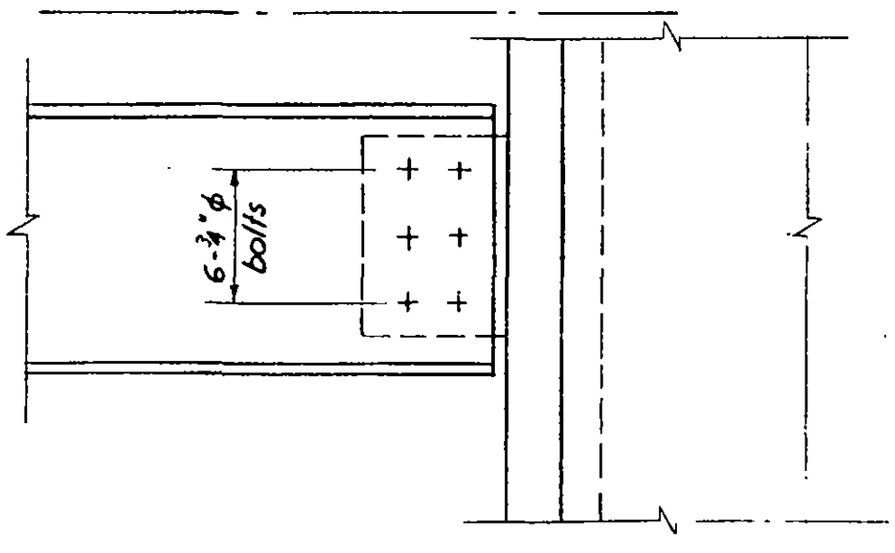

Section a-a

6-ABL-249.1

SKILLING - HELLE - CHRISTIANSEN - ROBERTSON Structural & Civil Engineers

PROJECT THE WORLD TRADE CENTER | TITLE CONNECTION DETAIL 752 A&B, 757A&B, 760A,B,D-G | DATE 8-14-67

REVISIONS

12-21-67

2-9-68

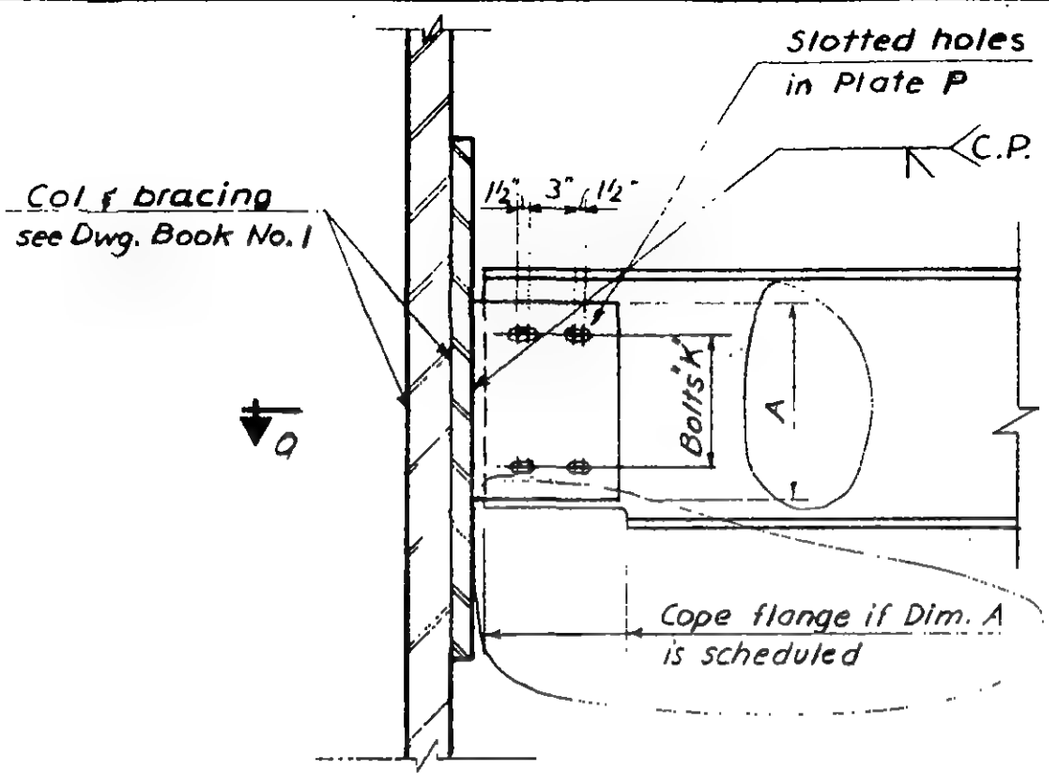

Elevation

SCHEDULE			
	A, E	B, F	D, G
PLATES			
P	¾"	¾"	¾"
DIM. A	—	—	1'-0"
BOLTS			
K	4 - 1" ϕ	6 - 1⅛" ϕ	6 - 1⅛" ϕ

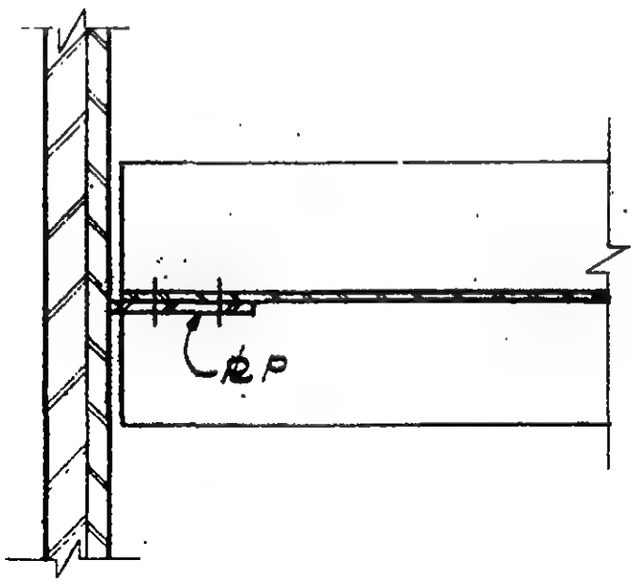

Section a-a

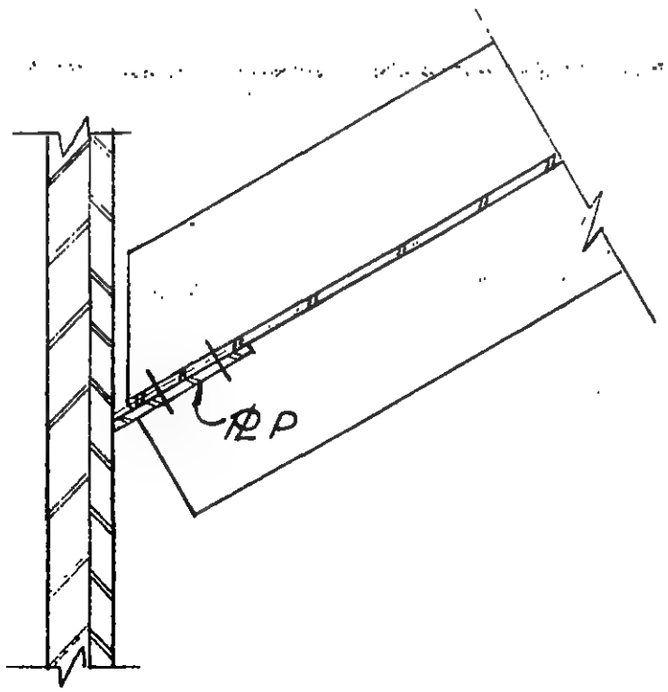

Section a-a
see plan for location

LICENSED PROFESSIONAL ENG'R
LESLIE E. ROBERTSON
No. 34360
UNIVERSITY OF THE STATE OF N.Y.

6-AB1-250

SKILLING - HELLE - CHRISTIANSEN - ROBERTSON Structural & Civil Engineers

PROJECT THE WORLD TRADE CENTER | TITLE CONNECTION DETAIL 753 | DATE 8-14-67

REVISIONS

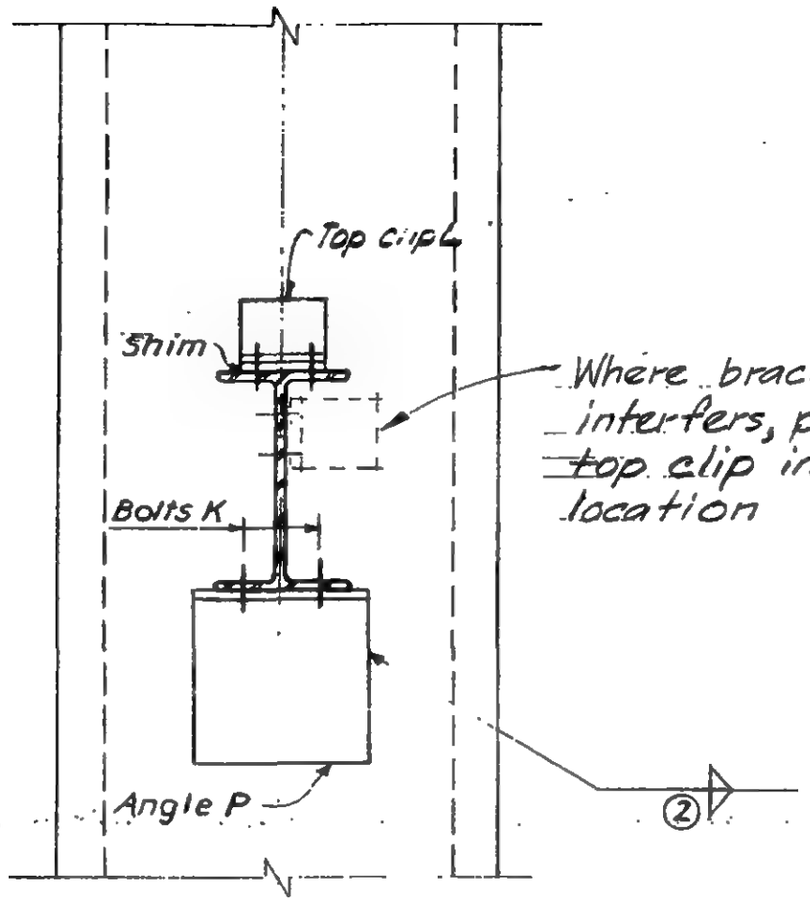

Elevation

SCHEDULE	
ANGLES	
P	8x8x¾ x 0'-8"
BOLTS	
K	4 - ¾" ϕ
WELDS	
②	5/8

LICENSED PROFESSIONAL ENGINEER
LESLIE E. ROBERTSON
No. 34960
STATE OF NEW YORK

6-ABI-251

SKILLING - HELLE - CHRISTIANSEN - ROBERTSON Structural & Civil Engineers

PROJECT THE WORLD TRADE CENTER | TITLE CONNECTION DETAIL T54 | DATE 8-14-6[illegible]

REVISIONS

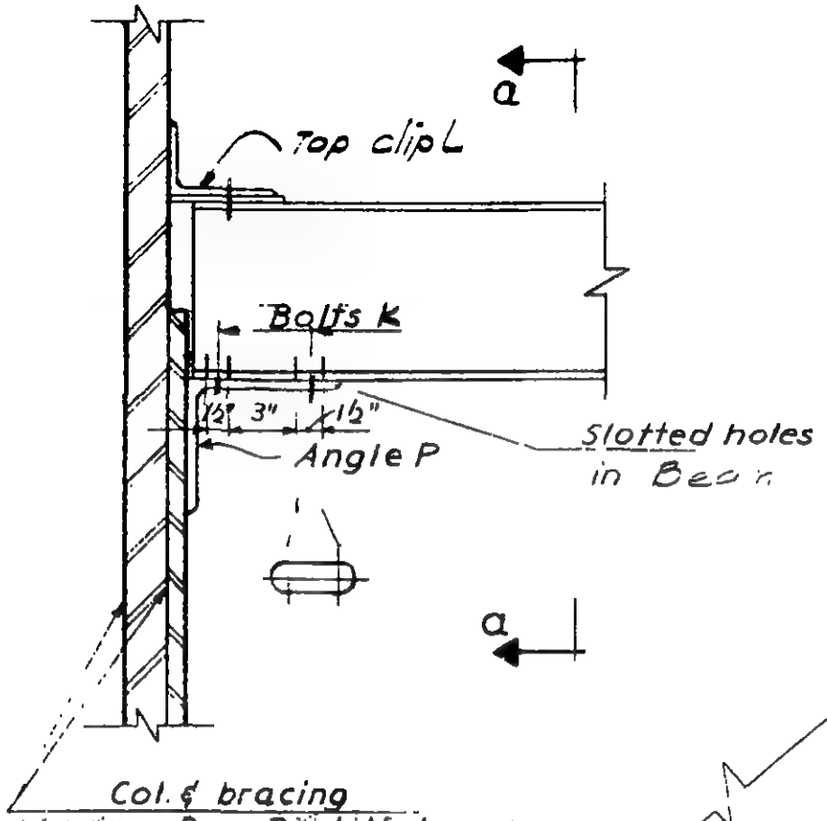

Elevation

SCHEDULE	
ANGLES	
P	8×6 [illegible]
BOLTS	
K	4 - ¾ ϕ
WELDS	
②	5/16

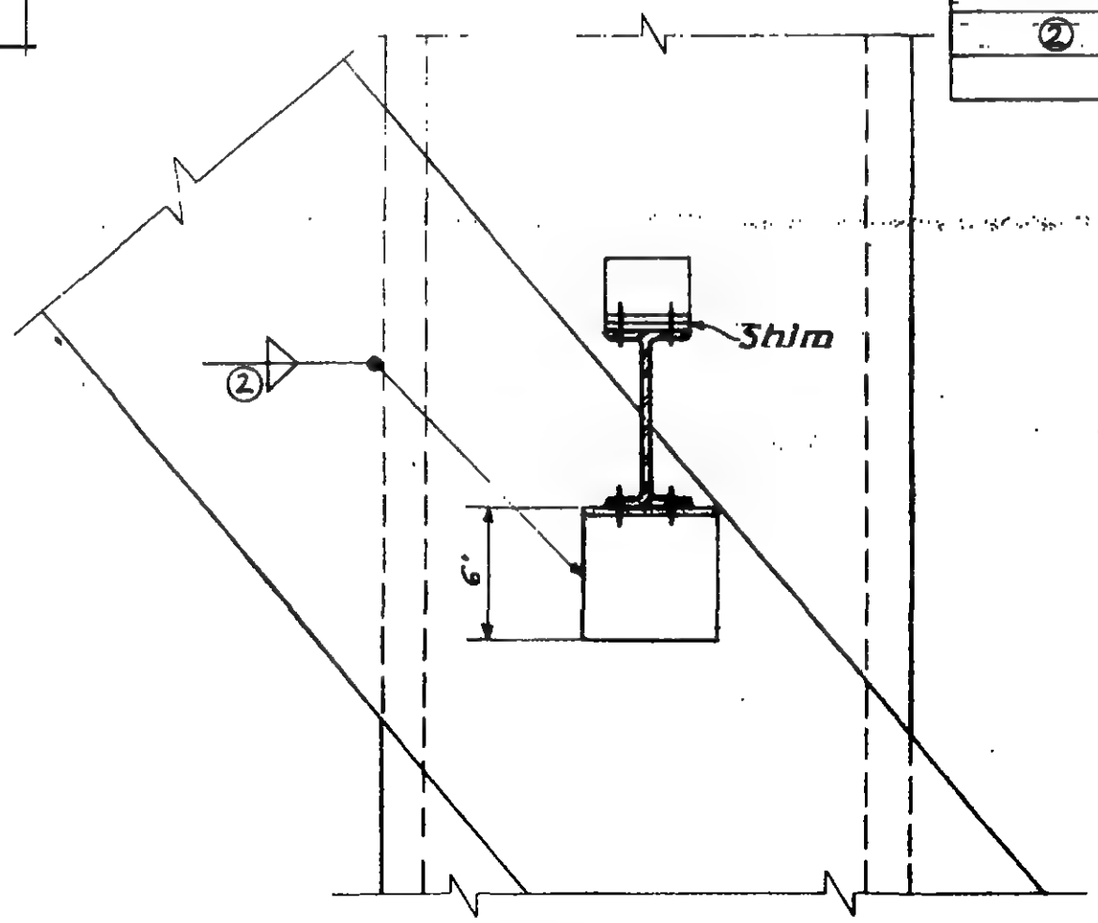

Section a-a

6-ABA-252

LICENSED PROFESSIONAL ENGINEER LESLIE E. ROBERTSON No. 34260 STATE OF NEW YORK

SKILLING - HELLE - CHRISTIANSEN - ROBERTSON Structural & Civil Engineers

PROJECT THE WORLD TRADE CENTER | TITLE CONNECTION DETAIL 755 | DATE 8-14-67

REVISIONS

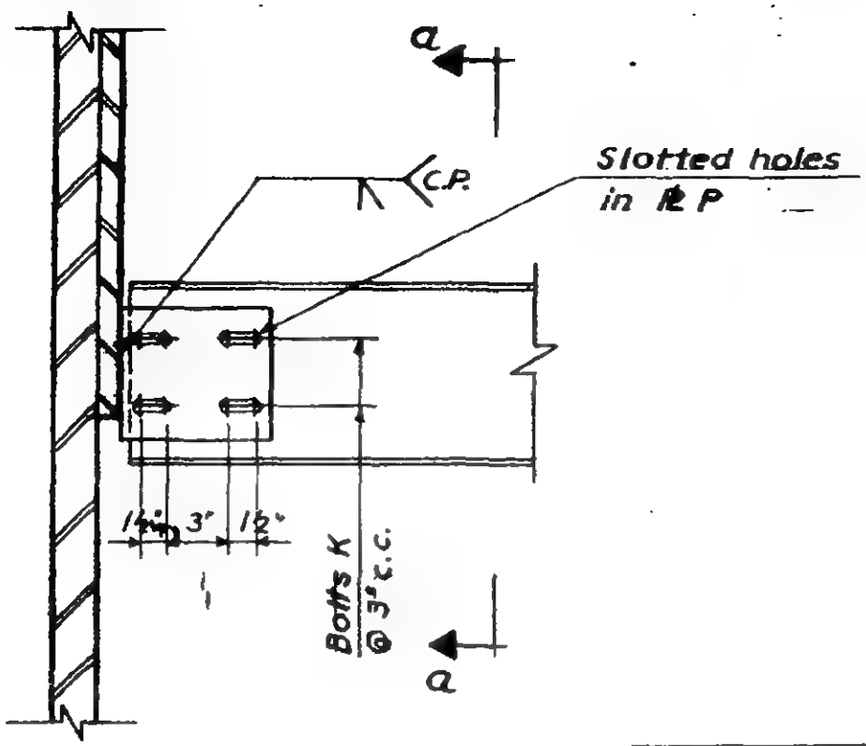

Elevation

SCHEDULE	
PLATES	
P	⅞"
BOLTS	
K	4 - 1" ϕ

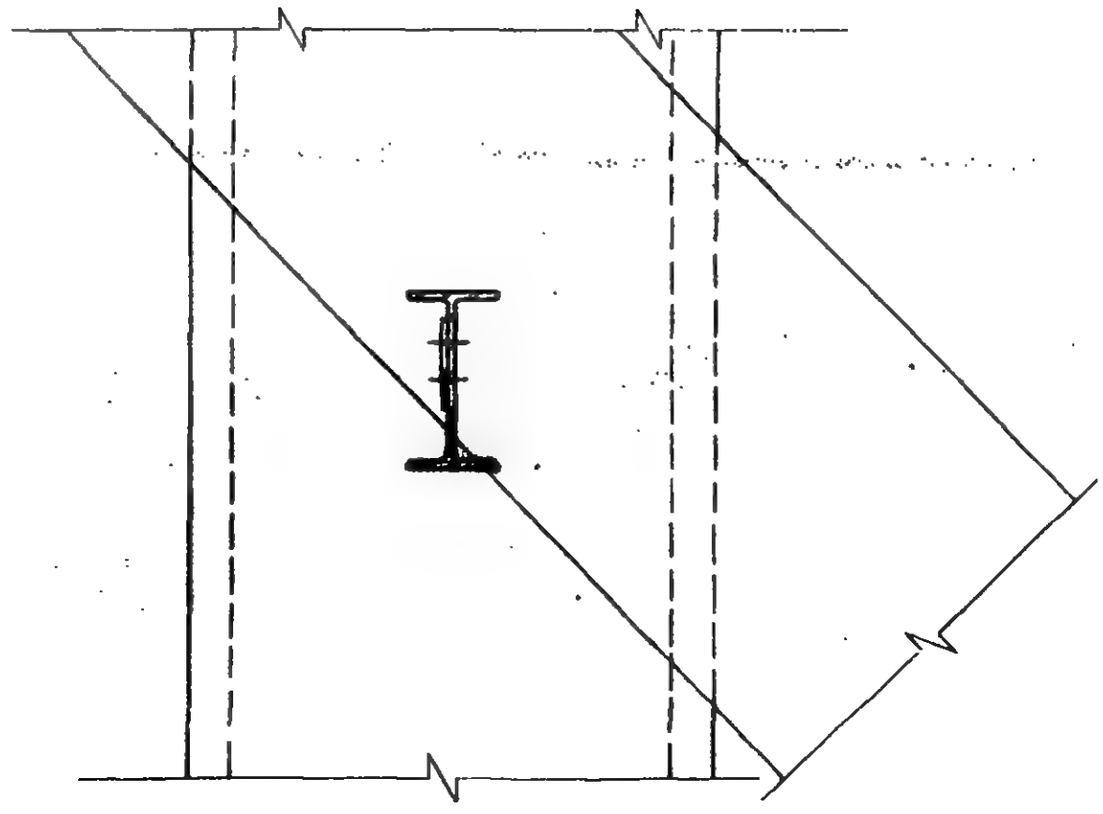

Section a-a

6-ABI-253

SKILLING - HELLE - CHRISTIANSEN - ROBERTSON Structural & Civil Engineers

PROJECT THE WORLD TRADE CENTER | TITLE CONNECTION DETAIL 756 A.B | DATE 8-14-67

REVISIONS

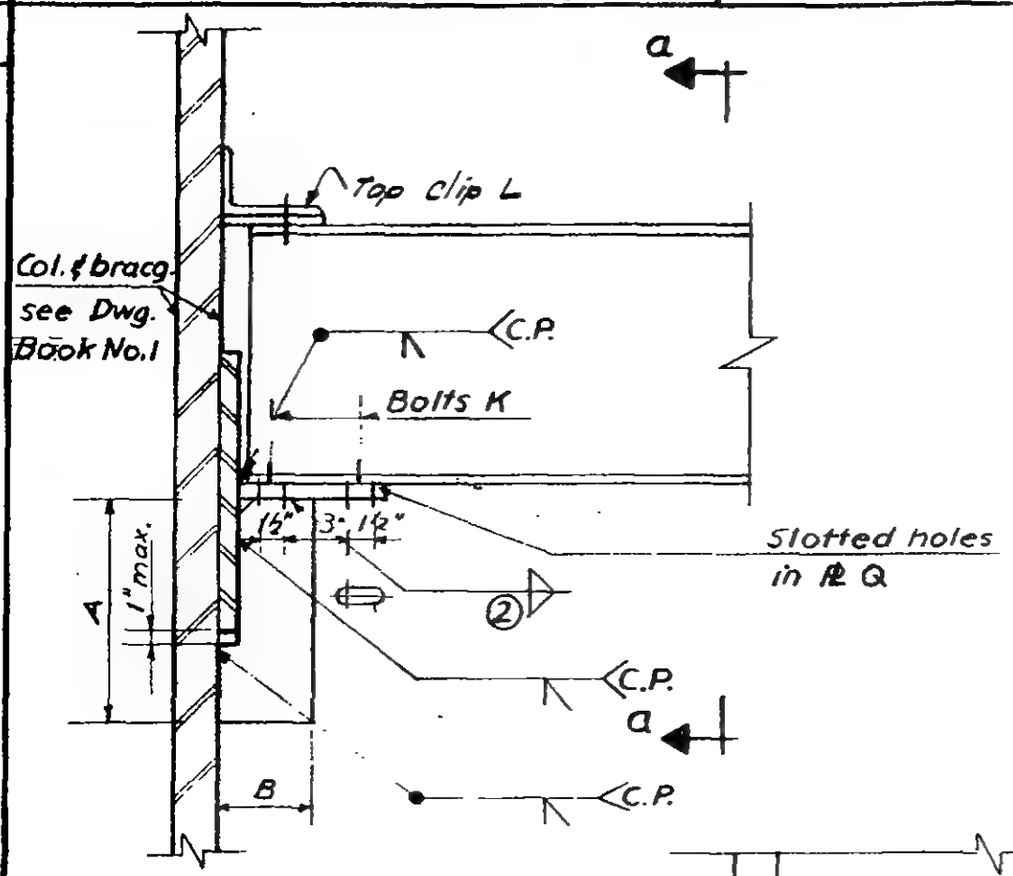

Elevation

SCHEDULE		
	756 A	756 B
PLATES		
P	1/2"	5/8"
Q	1/2"	5/8"
DIMENSIONS		
A	0'-10"	1'-1"
B	0'-5 1/2"	0'-5 1/2"
BOLTS		
K	4 - 3/4" ϕ	4 - 1 1/8" ϕ
WELDS		
②	5/16	5/16

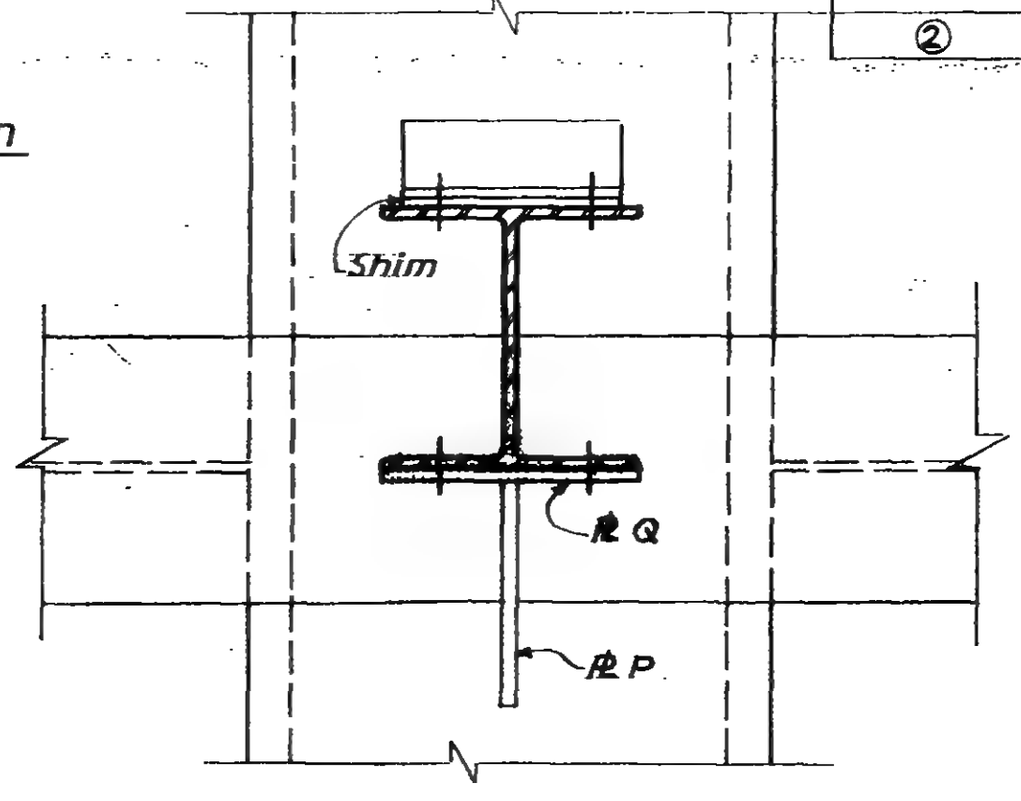

Section a-a

LICENSED PROFESSIONAL ENGINEER LESLIE E. ROBERTSON No. 34360 UNIVERSITY OF THE STATE OF NEW YORK

6-AB1-254

SKILLING - HELLE - CHRISTIANSEN - ROBERTSON Structural & Civil Engineers

PROJECT THE WORLD TRADE CENTER | TITLE CONNECTION DETAIL - 758 | DATE 8-14-67

REVISIONS

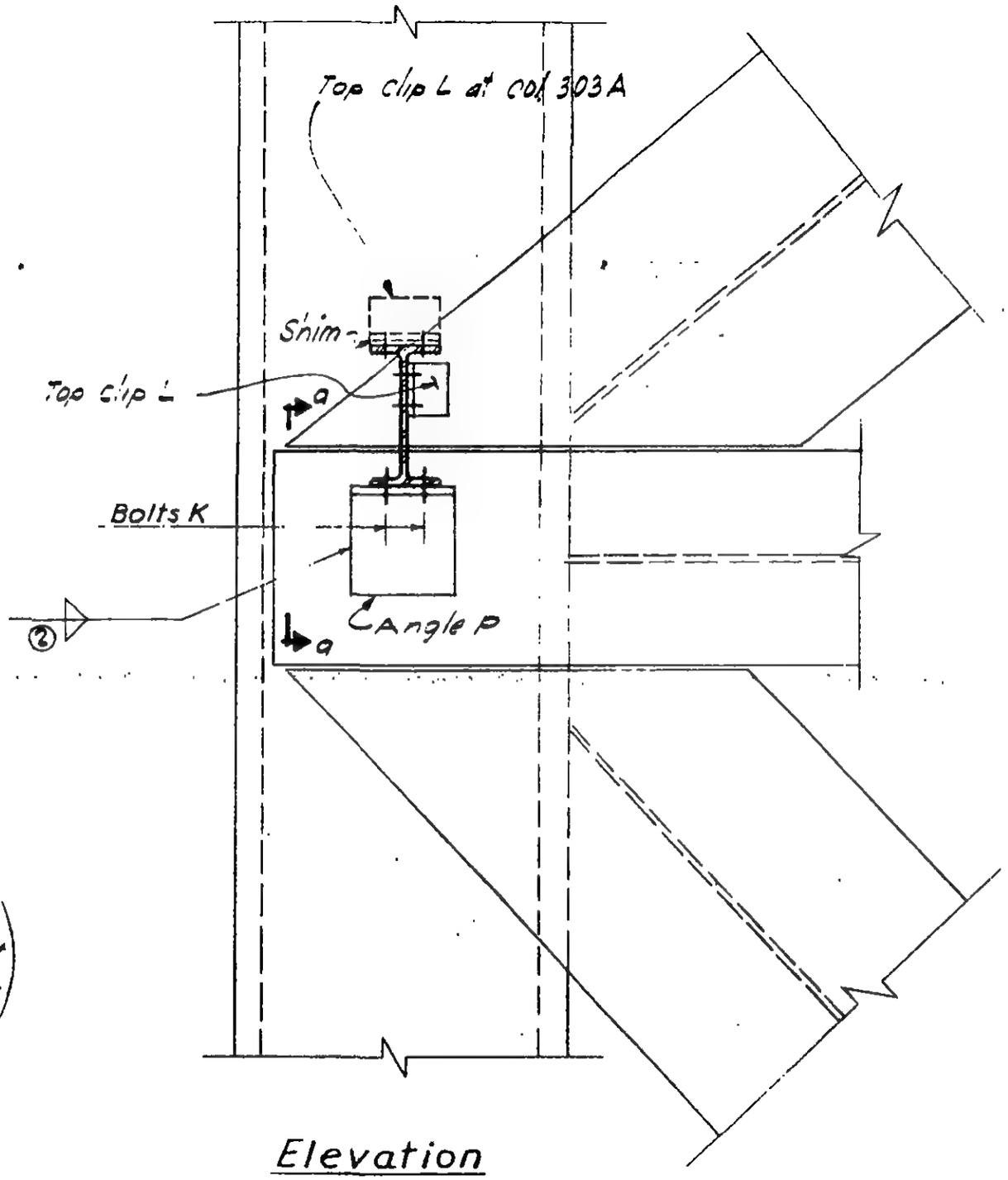

Elevation

SCHEDULE	
ANGLES	
P	6x4 x 3/4 x 0'-6"
BOLTS	
K	2 - 3/4 ϕ
WELDS	
②	5/8

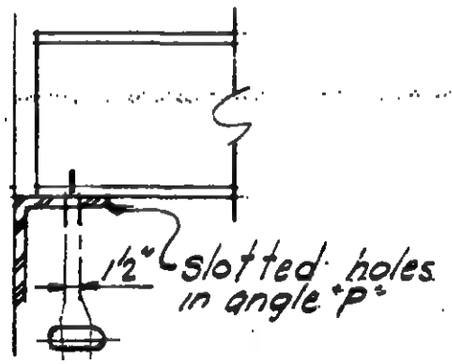

Section a-a

LICENSED PROFESSIONAL ENGINEER
LESLIE E. ROBERTSON
No. 34360
UNIVERSITY OF THE STATE OF NEW YORK

6-ABI-255

SKILLING - HELLE - CHRISTIANSEN - ROBERTSON Structural & Civil Engineers

PROJECT THE WORLD TRADE CENTER | TITLE CONNECTION DETAIL 759, 765 & 769 | DATE 8-14-67

REVISIONS

SCHEDULE	
ANGLE	
R	5 x 3½ x ⅜ x 0'-6"
BOLTS	
K	2 - 1"ϕ
WELDS	
①	5/16

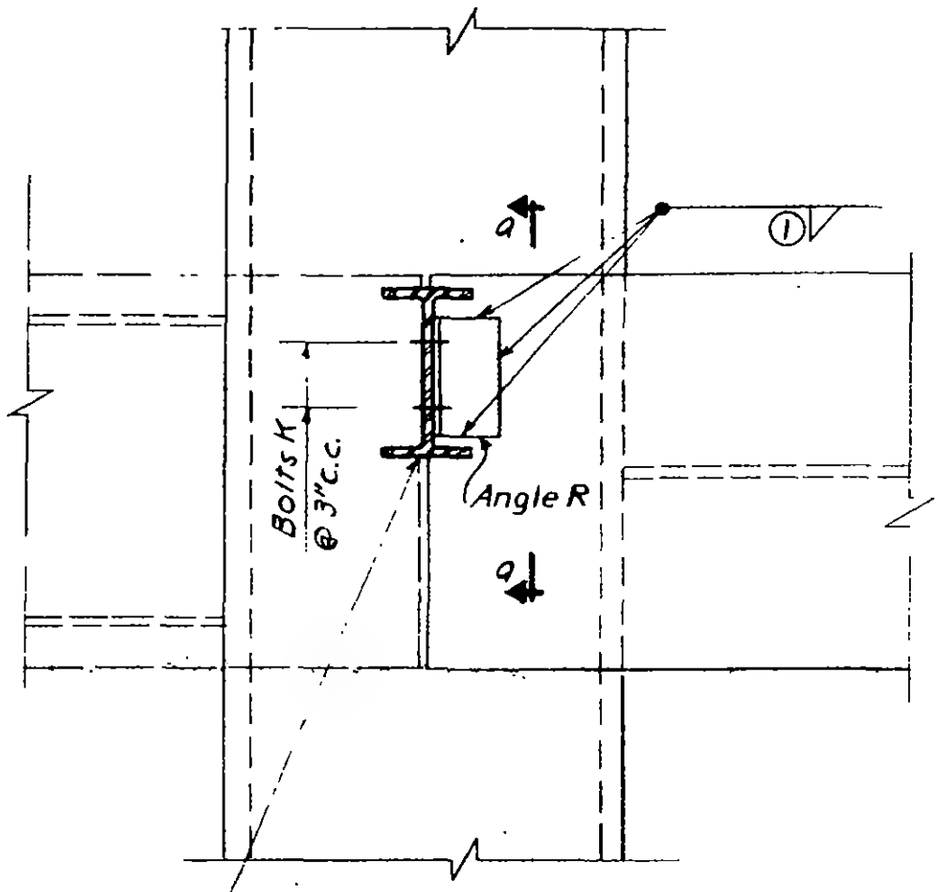

Elevation

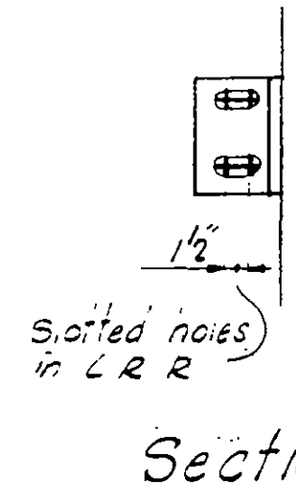

Section a-a

LICENSED PROFESSIONAL ENG'R
LESLIE E. ROBERTSON
No. 34360
UNIVERSITY OF THE STATE OF N.Y.

6-181 = 256

SKILLING - HELLE - CHRISTIANSEN - ROBERTSON Structural & Civil Engineers

PROJECT THE WORLD TRADE CENTER | TITLE CONNECTION DETAIL 761 A & B | DATE 8-14-67

REVISIONS

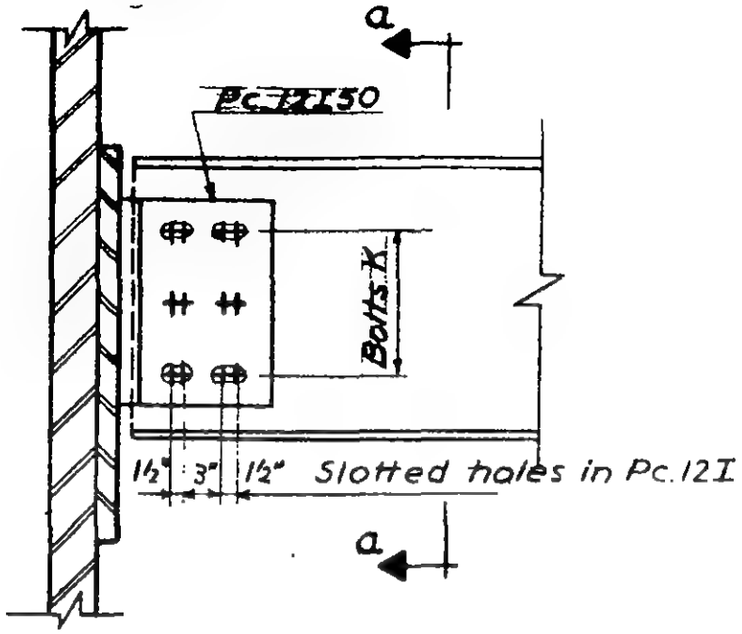

Elevation

SCHEDULE		
	761 A	761 B
BOLTS		
K	4 - 1" ϕ	6 - 1⅛" ϕ
WELDS		
①	5/16	3/8

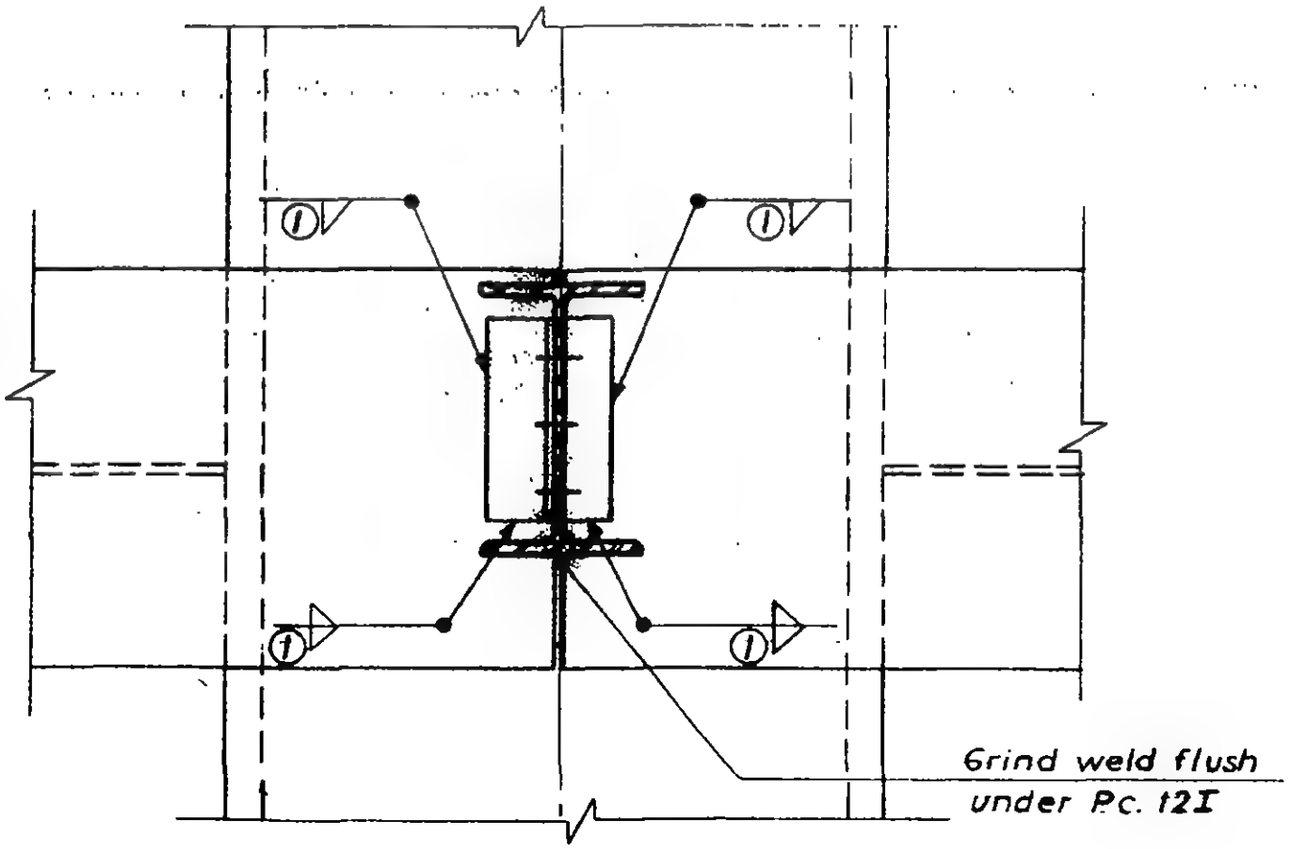

Section a-a

LESLIE E. ROBERTSON No. 34960 LICENSED PROFESSIONAL ENGINEER STATE OF NEW YORK

6-ABL-257

SKILLING - HELLE - CHRISTIANSEN - ROBERTSON Structural & Civil Engineers

PROJECT THE WORLD TRADE CENTER TITLE CONNECTION DETAIL 766 A & B DATE 8-14-67

REVISIONS

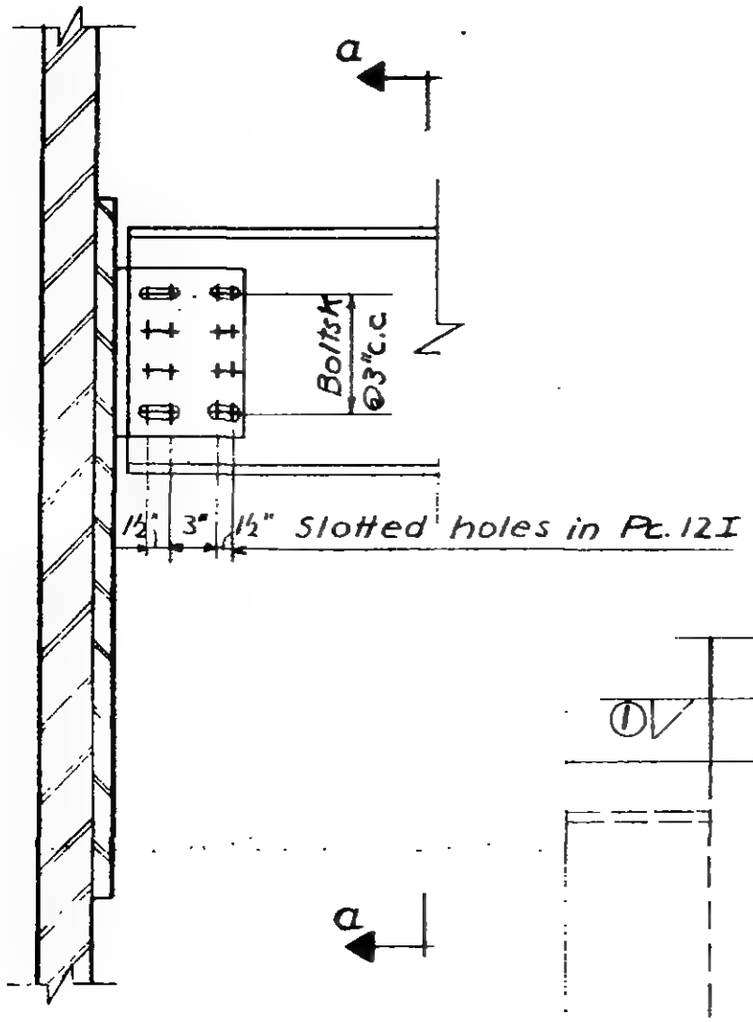

Elevation

SCHEDULE		
	766 A	766 B
BOLTS		
K	8 - ⅞"ϕ	8 - 1"ϕ
WELDS		
①	5/16	5/16

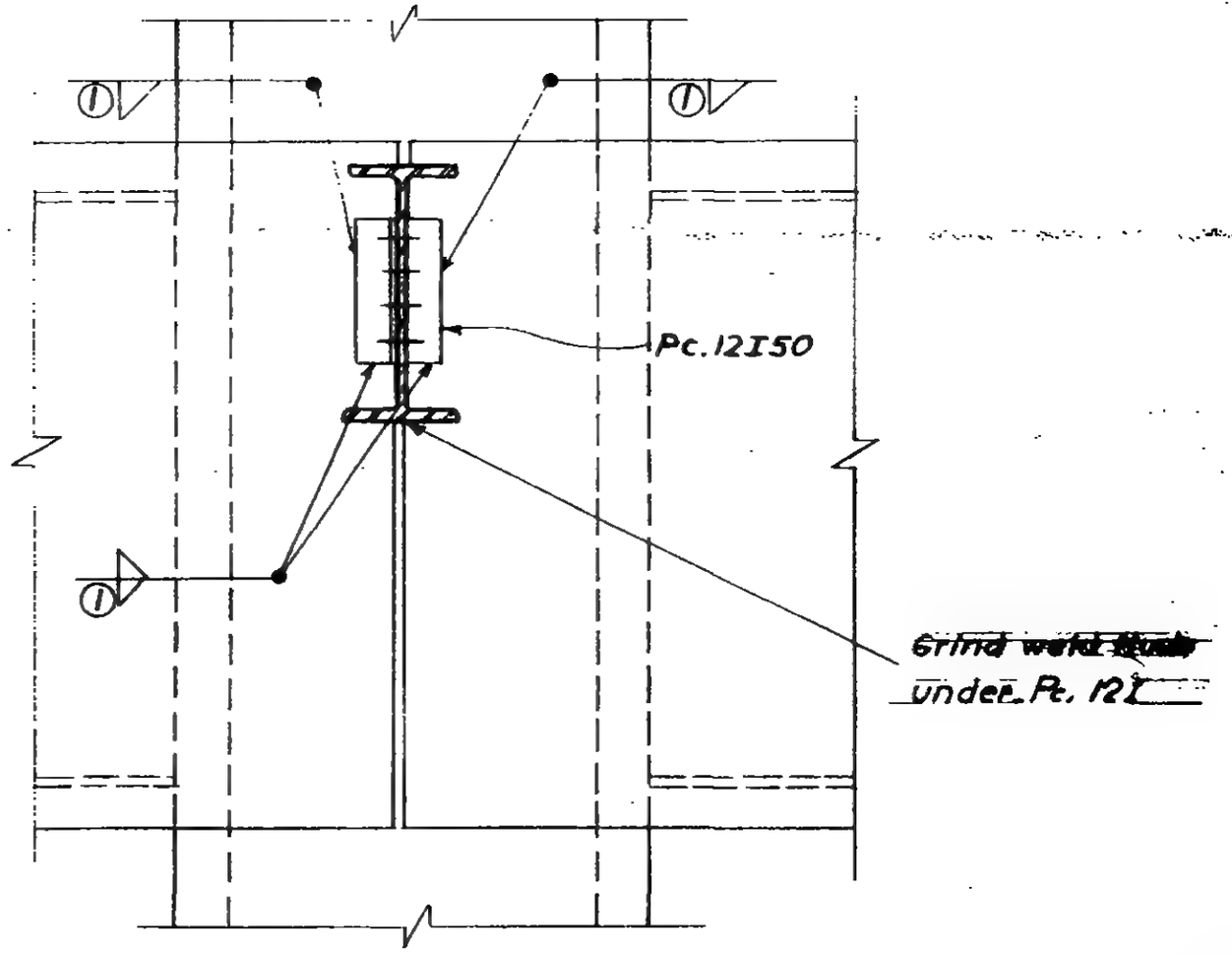

Section a-a

LICENSED PROFESSIONAL ENGINEER
LESLIE E. ROBERTSON
No. 34360
UNIVERSITY OF THE STATE OF NEW YORK

6-AB1-2[redacted]

SKILLING - HELLE - CHRISTIANSEN - ROBERTSON Structural & Civil Engineers

PROJECT THE WORLD TRADE CENTER | TITLE CONNECTION DETAIL 767A-E 768A,C,D, 770A | DATE 8-14-67

REVISIONS

2-9-68

3-11-68

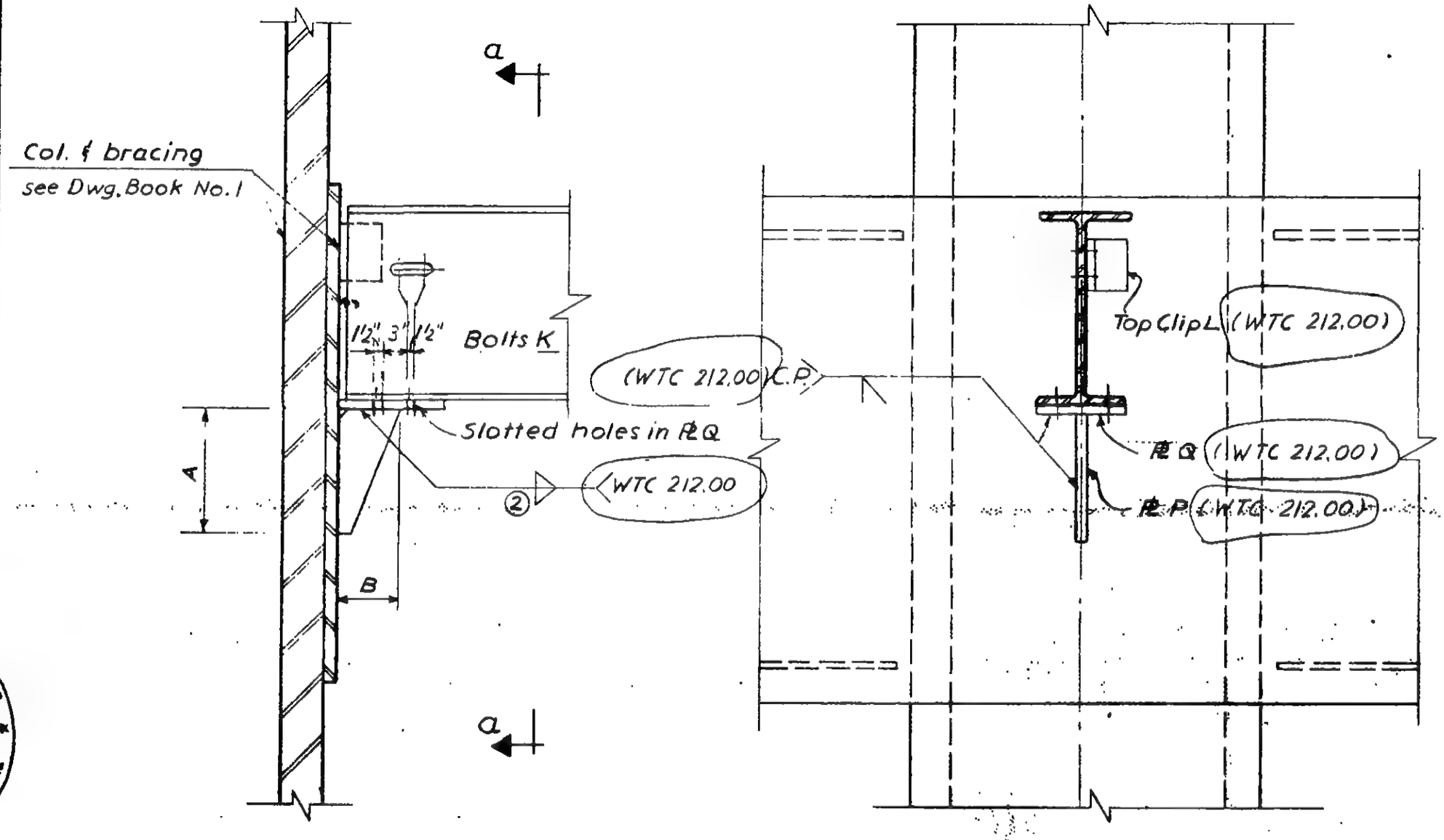

Elevation

Section a-a

LICENSED PROFESSIONAL ENGINEER
LESLIE E. ROBERTSON
No. 34360
UNIVERSITY OF THE STATE OF NEW YORK

6-ABI-259

SKILLING - HELLE - CHRISTIANSEN - ROBERTSON — Structural & Civil Engineers

PROJECT: THE WORLD TRADE CENTER | TITLE: SCHEDULE FOR DETAIL 767 A-E; 768 A,C,D, 770 A | DATE: 8-14-67

REVISIONS
2-9-68
3-11-68

	767 A,C	767 B	768 A,C,D	770 A	767 D	767 E
PLATES						
P	5/8"	5/8"	1/2"	1/2"	3/4"	1"
Q	5/8"	5/8"	1/2"	1/2'	3/4"	1"
DIMENSIONS						
A	0'-10"	0'-11"	0'-11"	0'-10"	1'-0"	1'-2"
B	0'-4½"	0'-4½"	0'-4½"	0'-4½"	0'-4½"	0'-6"
BOLTS						
K	4 - 1⅛" ϕ	4 - ⅞" ϕ	4 - ¾" ϕ	4 - ⅞" ϕ	4-1⅛" ϕ	4-⅞" ϕ
WELDS						
(2)	5/16	5/16	5/16	5/16	5/16	3/8

LICENSED PROFESSIONAL ENGINEER — LESLIE E. ROBERTSON — No. 34360 — UNIVERSITY OF THE STATE OF NEW YORK

6 - ABI - 259.1

SKILLING - HELLE - CHRISTIANSEN - ROBERTSON Structural & Civil Engineers

PROJECT THE WORLD TRADE CENTER | TITLE CONNECTION DETAIL 771A 771B, 771C | DATE 12-21-67

REVISIONS

2-9-68

SCHEDULE	
	PL P
771A	3/8"
771B	3/8"
771C	1/2"

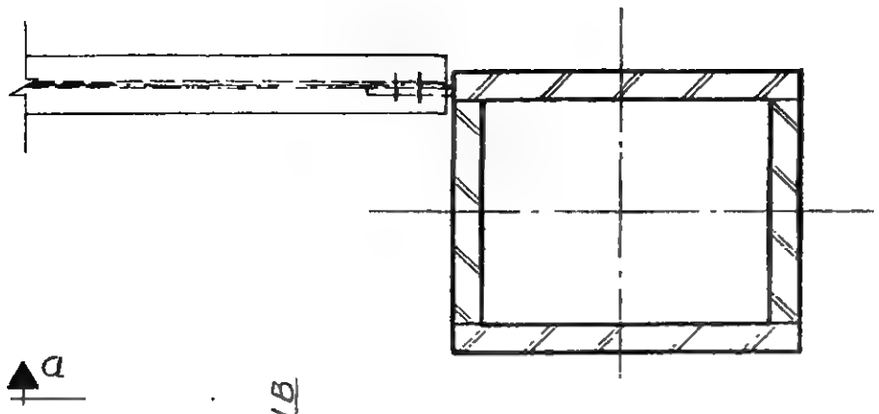

Plan

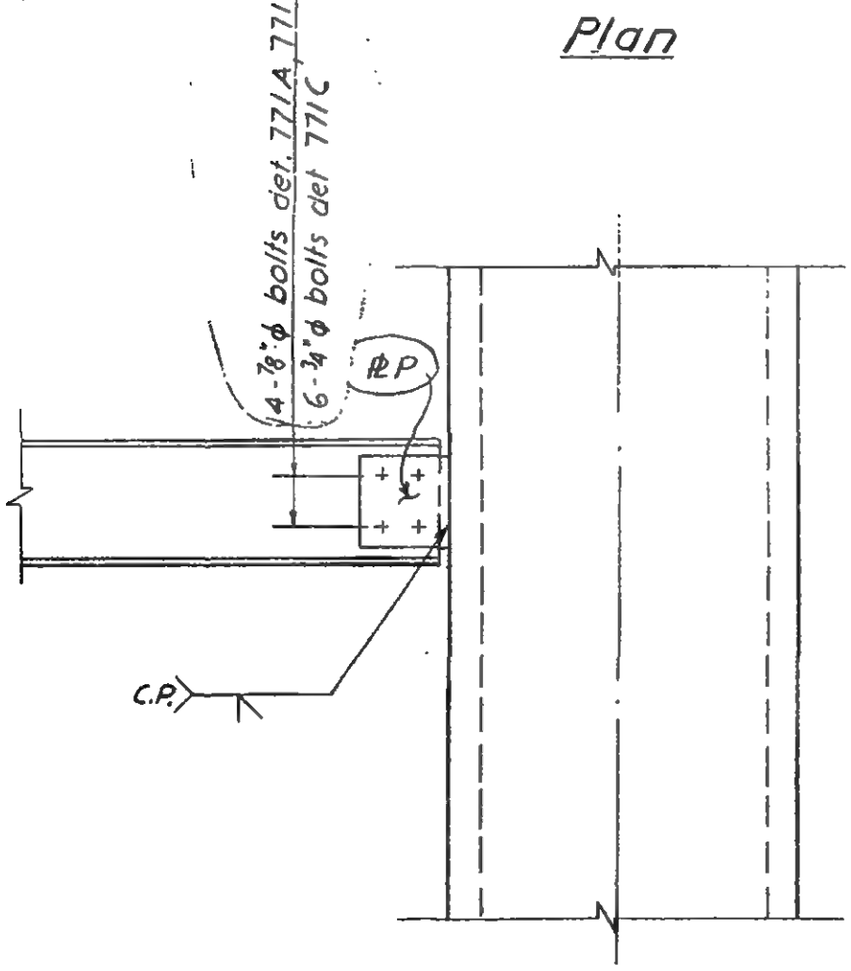

Section a-a

LICENSED PROFESSIONAL ENGINEER
LESLIE E. ROBERTSON
No. 34300
UNIVERSITY OF THE STATE OF NEW YORK

6-AB1-260

SKILLING - HELLE - CHRISTIANSEN - ROBERTSON Structural & Civil Engineers

PROJECT THE WORLD TRADE CENTER | TITLE CONNECTION DETAIL 772 A, B, C | DATE 2-9-68

REVISIONS

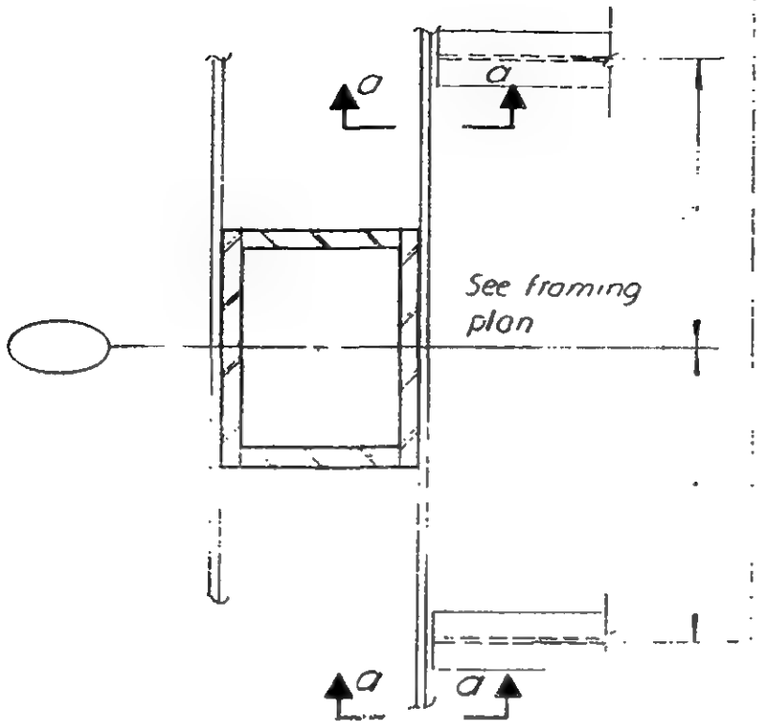

Plan
772 A

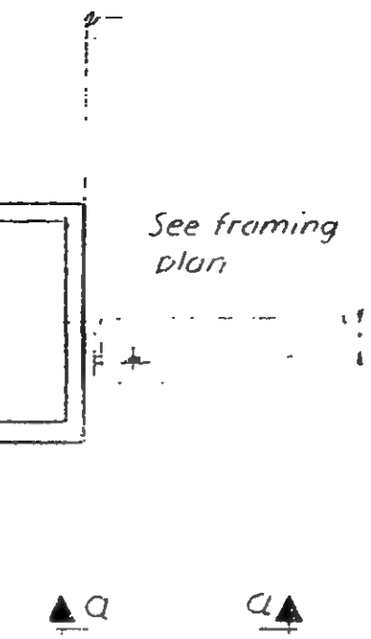

Plan
772 B & C

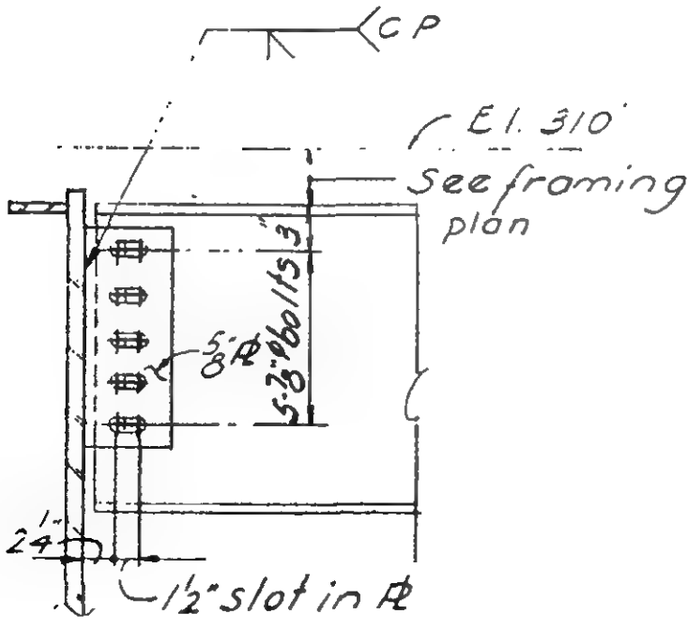

Section a-a
Detail 772 A

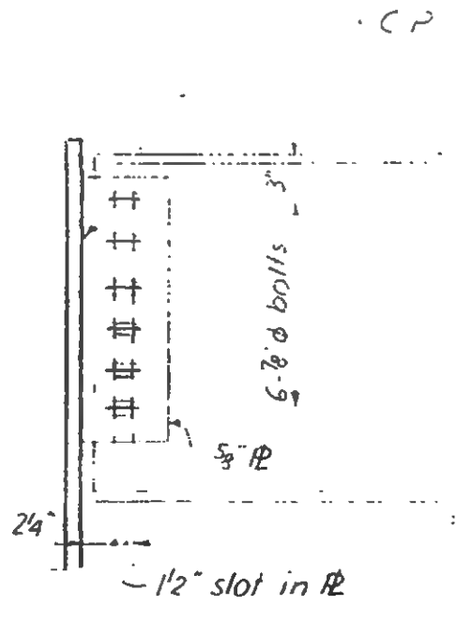

Section a-a
Detail 772 B

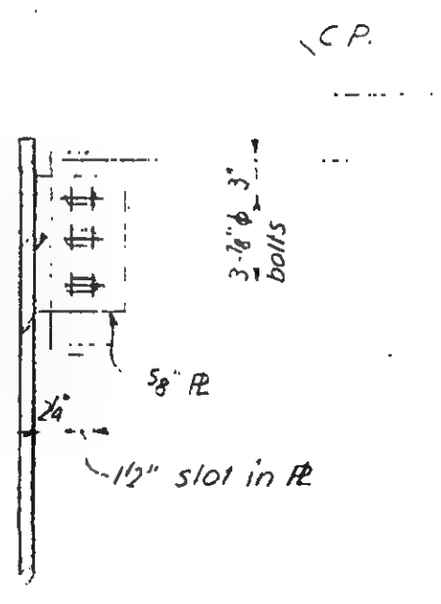

Section a-a
Detail 772 C

LICENSED PROFESSIONAL ENGINEER
LESLIE E. ROBERTSON
No. 34360
UNIVERSITY OF THE STATE OF NEW YORK

6-ABI-261

SKILLING - HELLE - CHRISTIANSEN - ROBERTSON Structural & Civil Engineers

PROJECT THE WORLD TRADE CENTER | TITLE CONNECTION DETAIL 773 A & B | DATE 2-9-68

REVISIONS

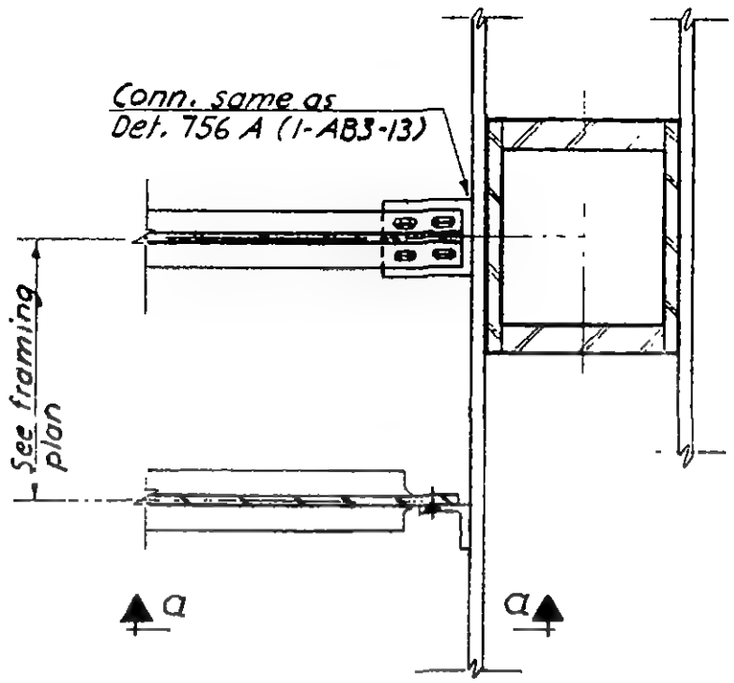

Plan
Detail 773 A

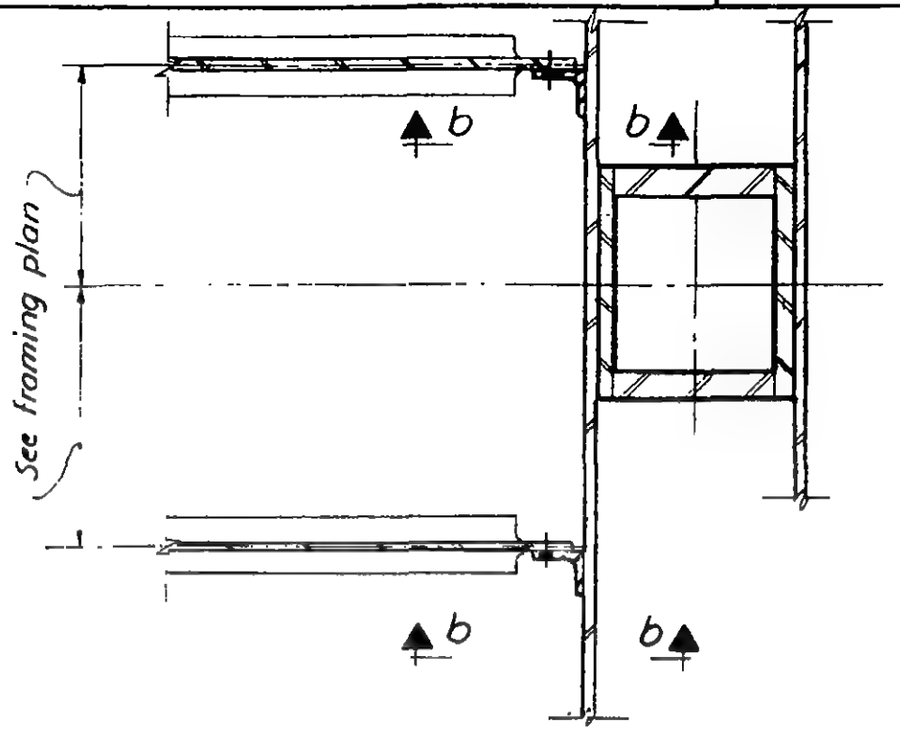

Plan
Detail 773 B

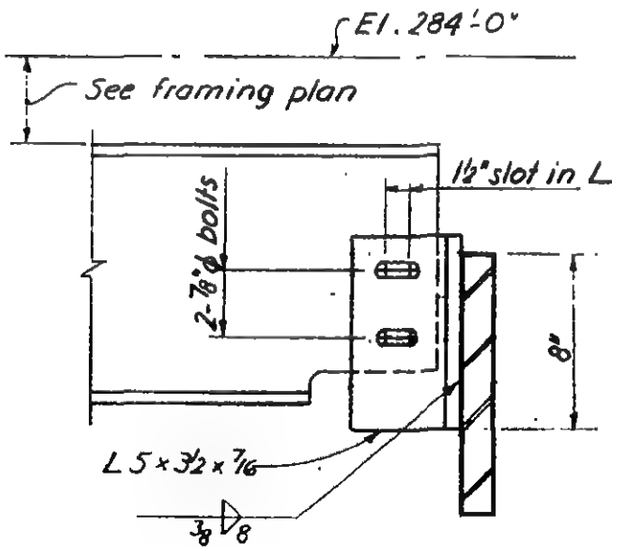

Section a-a

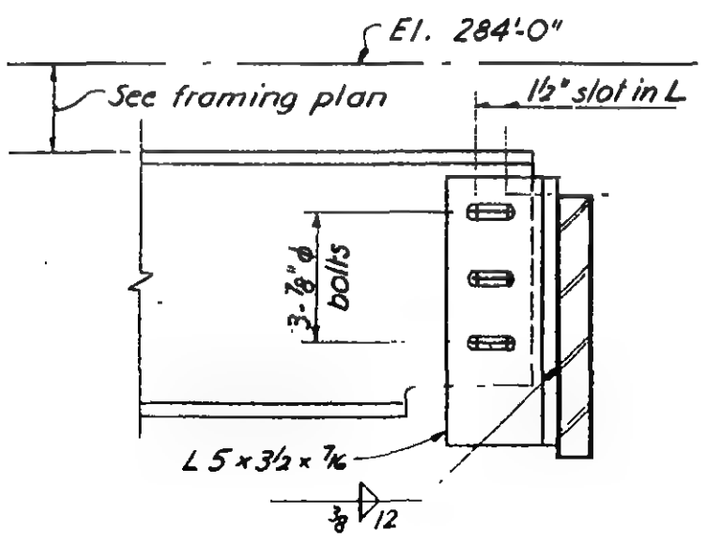

Section b-b

6-AB1-262

SKILLING - HELLE - CHRISTIANSEN - ROBERTSON Structural & Civil Engineers

PROJECT THE WORLD TRADE CENTER | TITLE CONNECTION DETAIL 774 A-E | DATE 2-9-68

REVISIONS

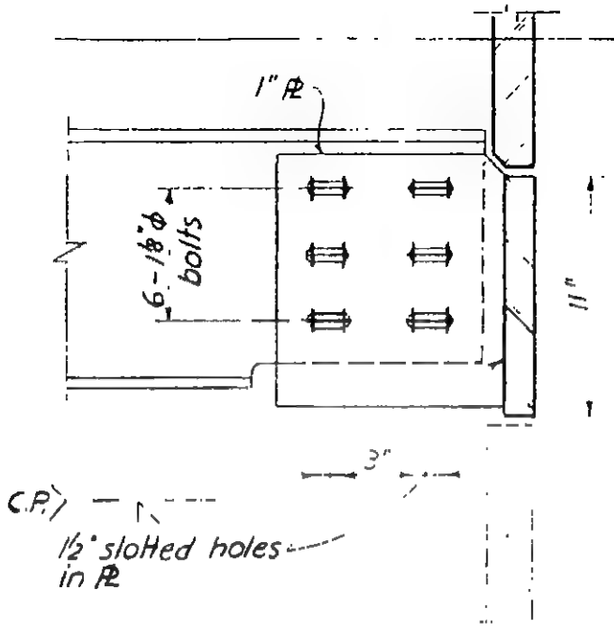

Section
Detail 774 A

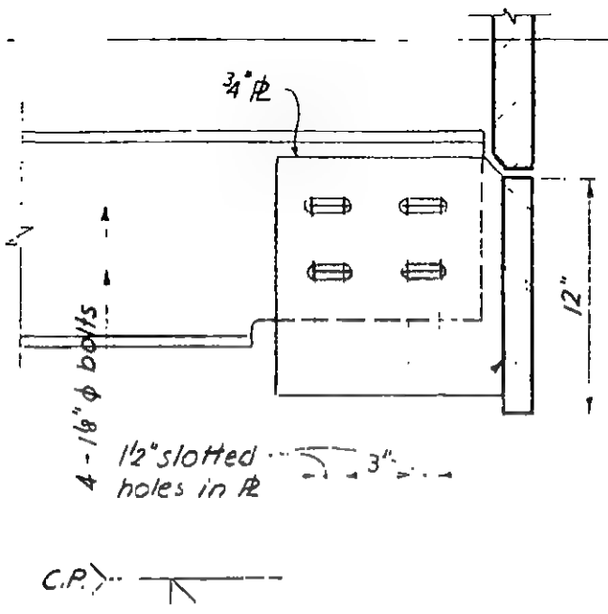

Section
Detail 774 B & E

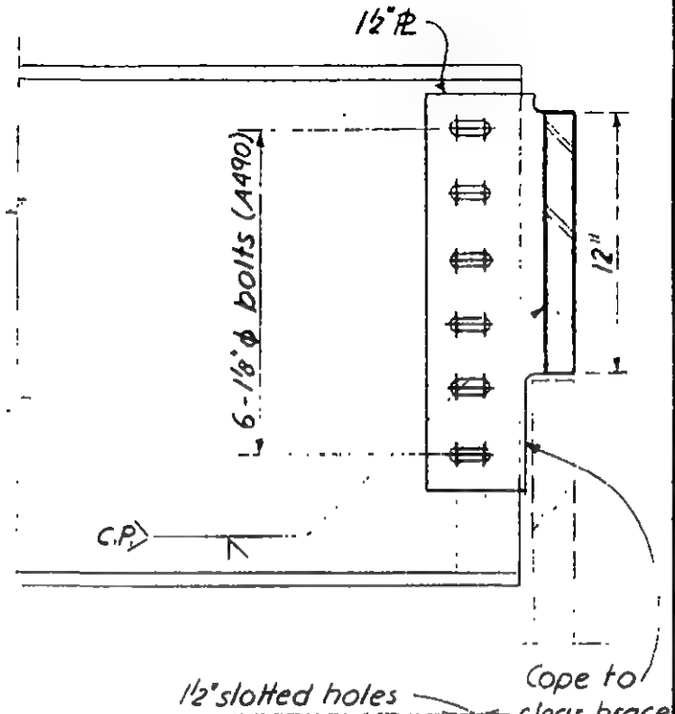

Section a-a
Detail 774 C & D

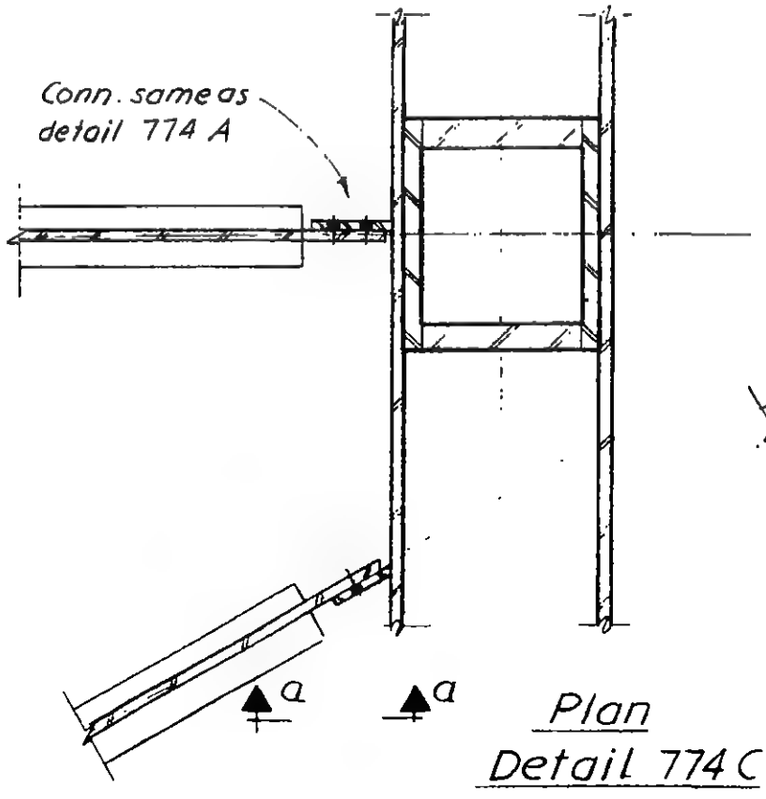

Plan
Detail 774 C

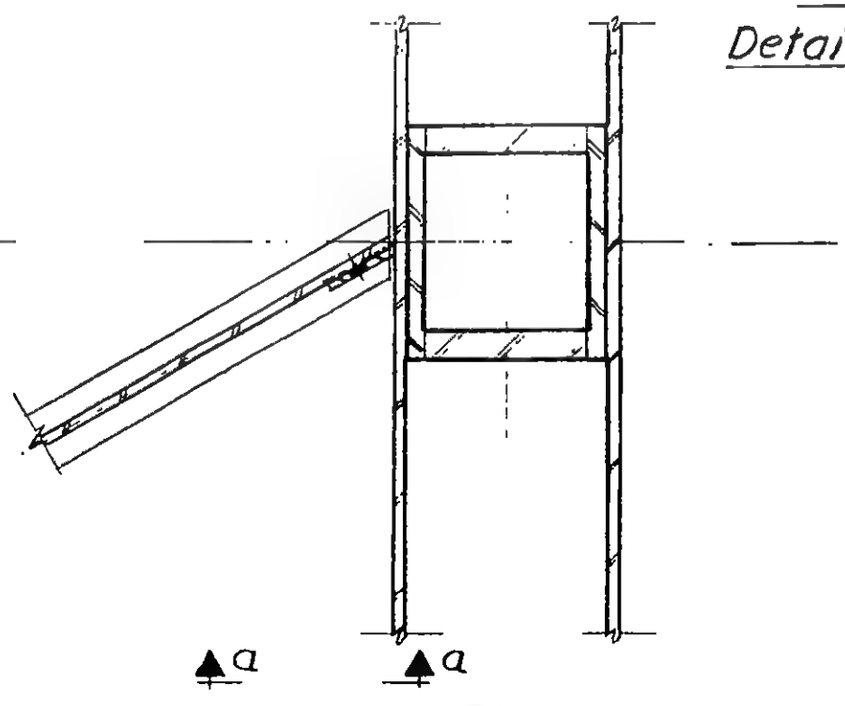

Plan
Detail 774 D

6-ABI-263

SKILLING - HELLE - CHRISTIANSEN - ROBERTSON Structural & Civil Engineers

PROJECT THE WORLD TRADE CENTER | TITLE CONNECTION DETAIL 775 A-C | DATE 2-9-68

REVISIONS

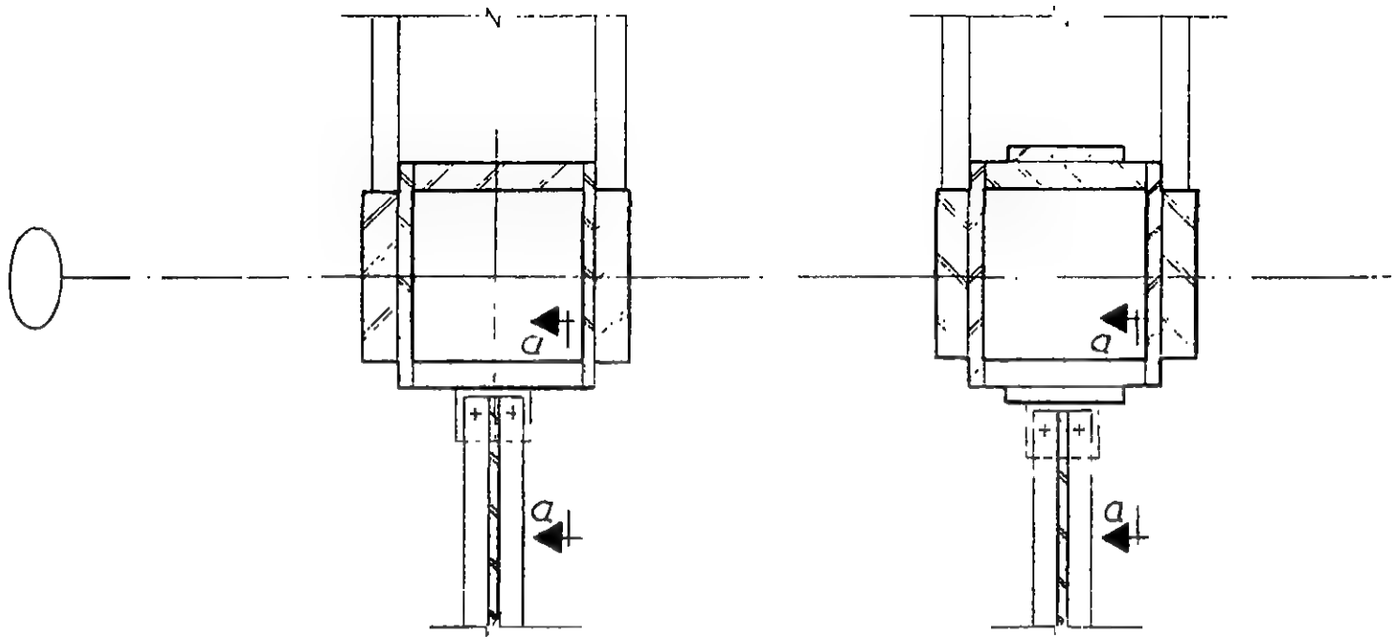

Plan
Detail 775A

Plan
Detail 775 B&C

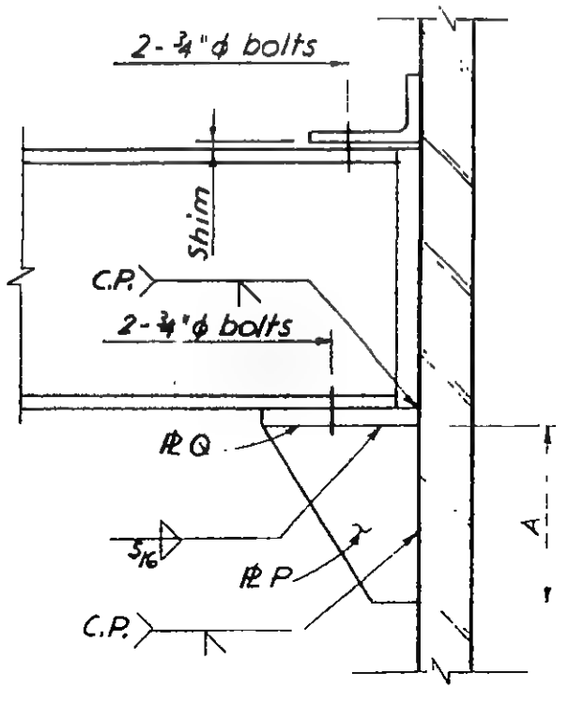

Section a-a

SCHEDULE			
	775 A	775 B	775C
PLATE P	4½" x ¾"	7" x 1"	7" x 1"
PLATE Q	¾"	1"	1"
DIM. A	1'-2"	1'-2"	1'-2"

6-AB1-264

SKILLING - HELLE - CHRISTIANSEN - ROBERTSON Structural & Civil Engineers

PROJECT THE WORLD TRADE CENTER | TITLE CONNECTION DETAIL 777A | DATE 2-9-68

REVISIONS

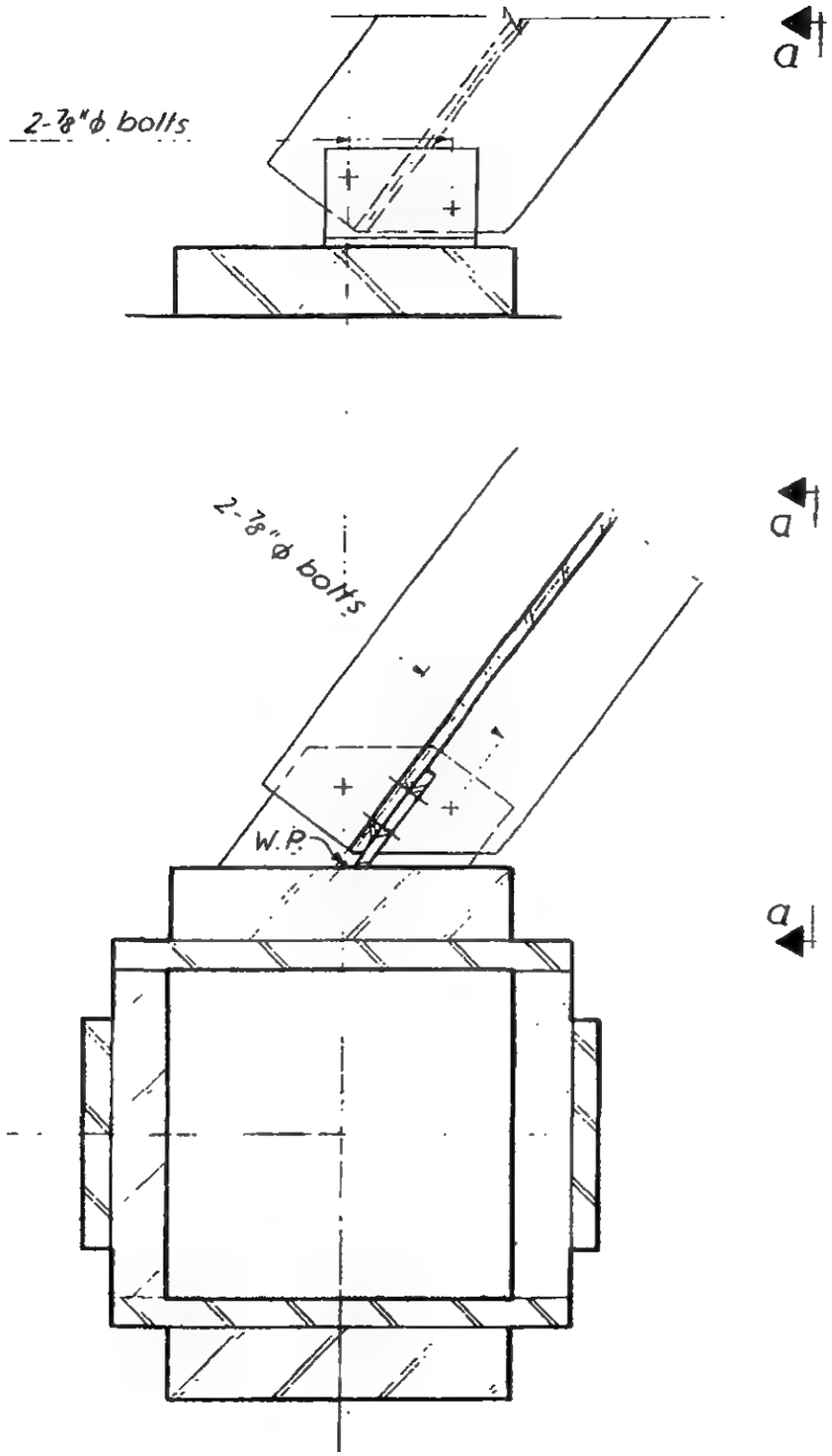

Plan

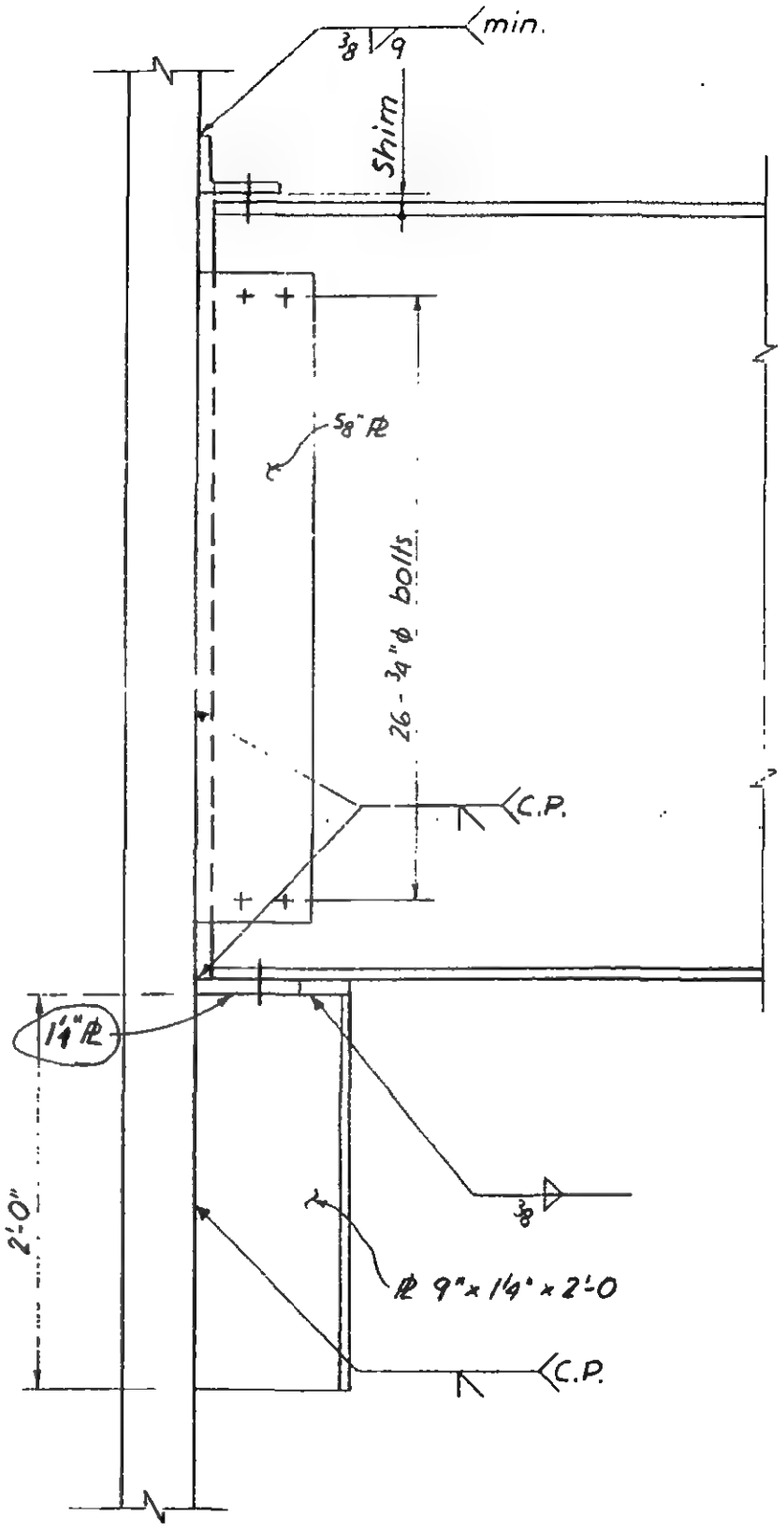

Section a-a

6 - ABI - 266

SKILLING - HELLE - CHRISTIANSEN - ROBERTSON Structural & Civil Engineers

PROJECT THE WORLD TRADE CENTER | TITLE CONNECTION DETAIL 778 A | DATE 2-9-68

REVISIONS

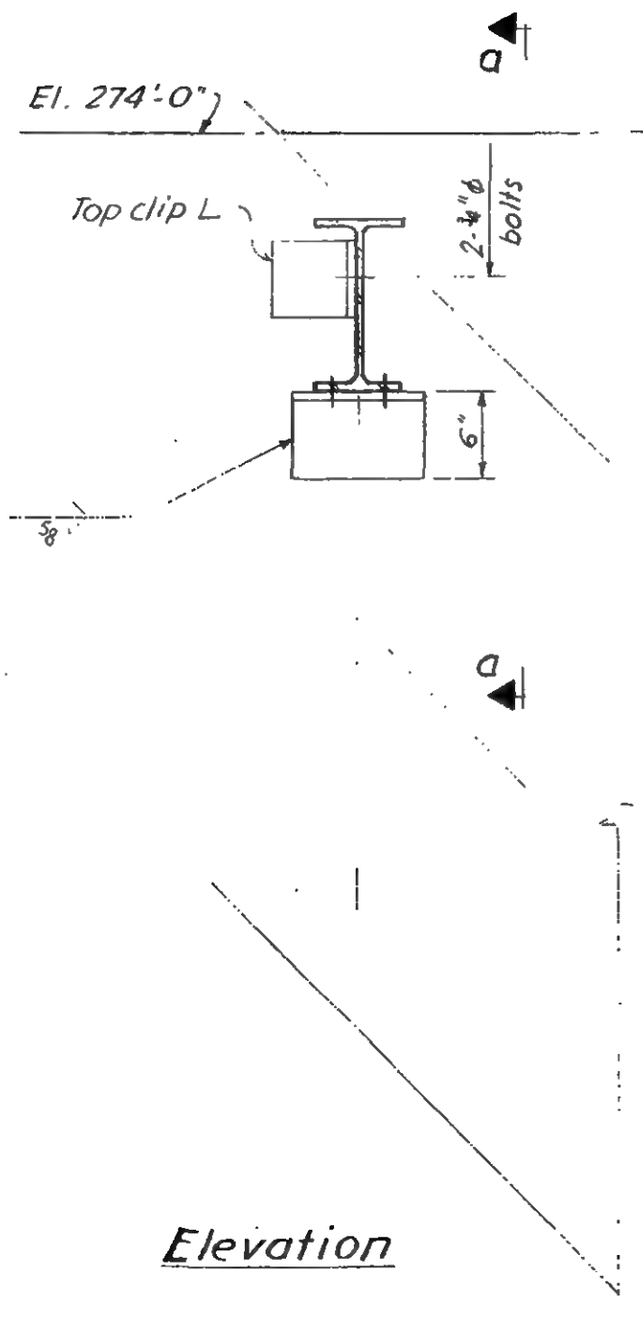

Elevation

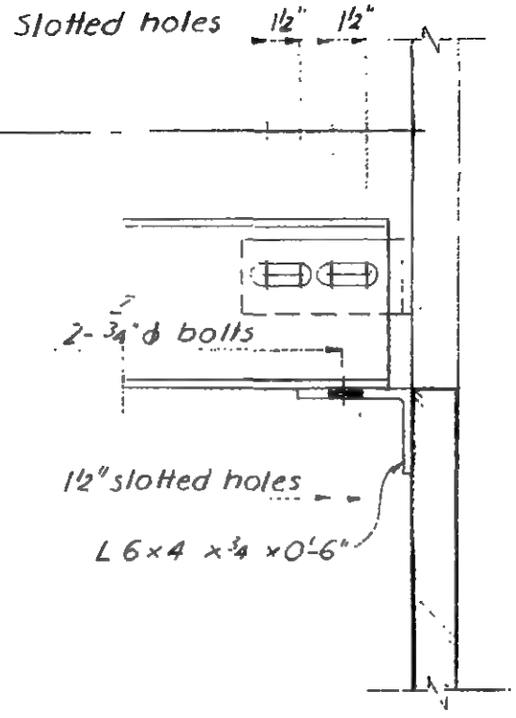

Section a-a

6-AB1-267

SKILLING - HELLE - CHRISTIANSEN - ROBERTSON Structural & Civil Engineers

PROJECT THE WORLD TRADE CENTER | TITLE CONNECTION DETAIL 779 A | DATE 2-9-68

REVISIONS

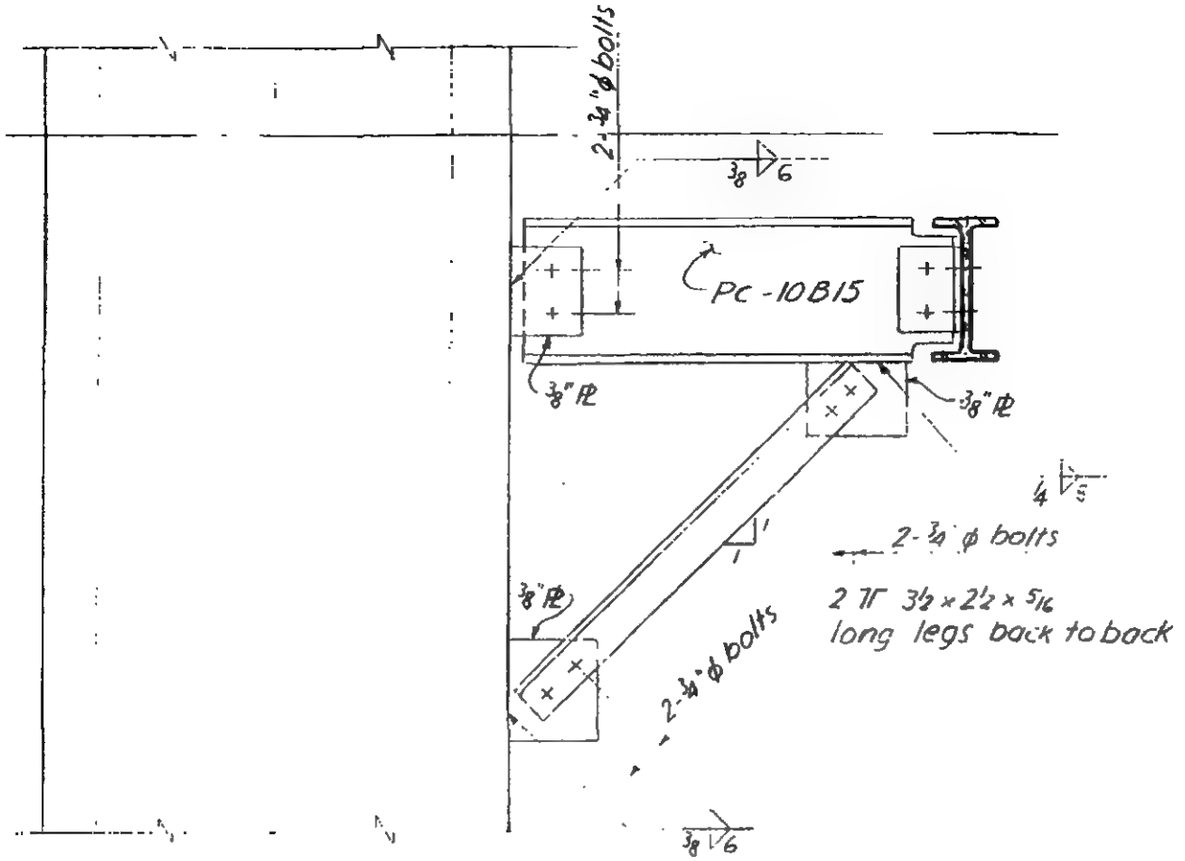

Section a-a

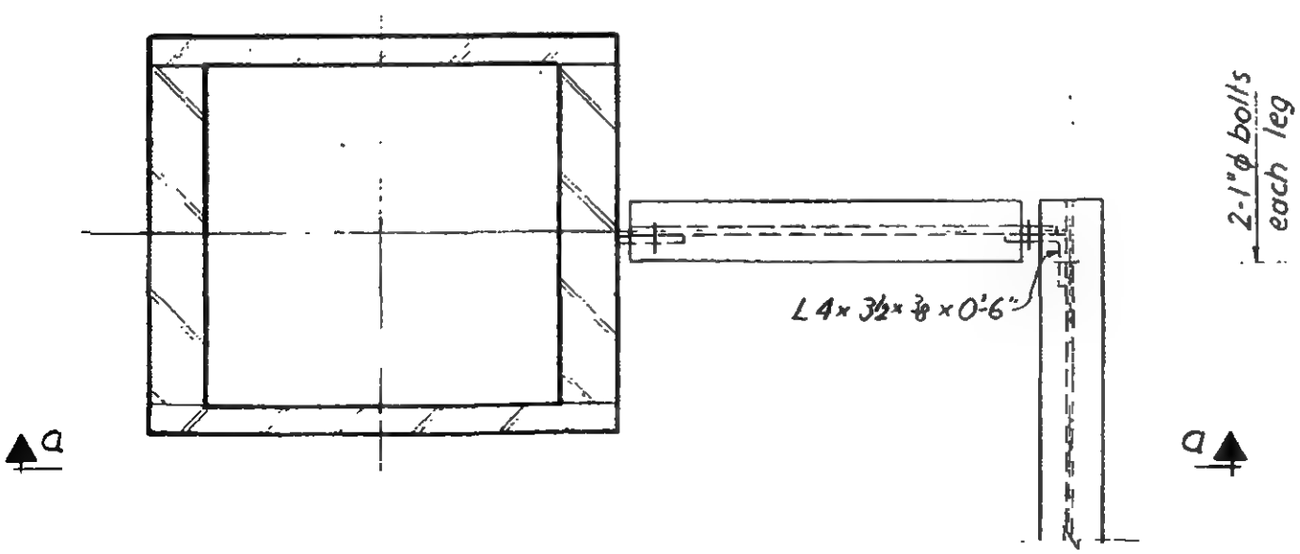

Plan

6-ABI-268

SKILLING - HELLE - CHRISTIANSEN - ROBERTSON Structural & Civil Engineers

PROJECT THE WORLD TRADE CENTER | TITLE CONNECTION DETAIL 780A, 780B | DATE 2-9-68

REVISIONS

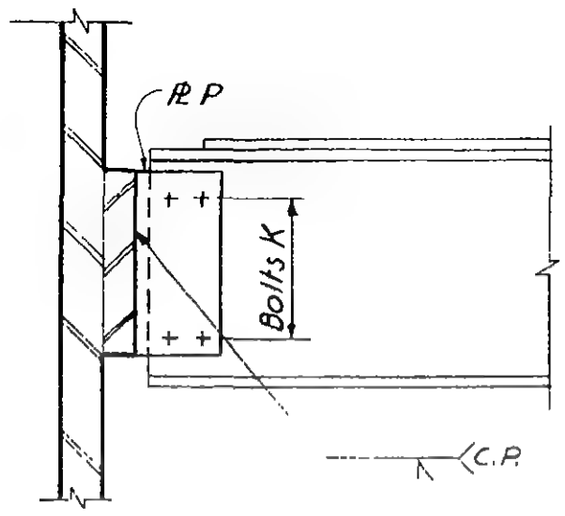

Section b-b

SCHEDULE		
	780 A	780 B
PL P	3/4"	7/8
BOLTS K	10 - 3/4" ϕ	10 - 1" ϕ

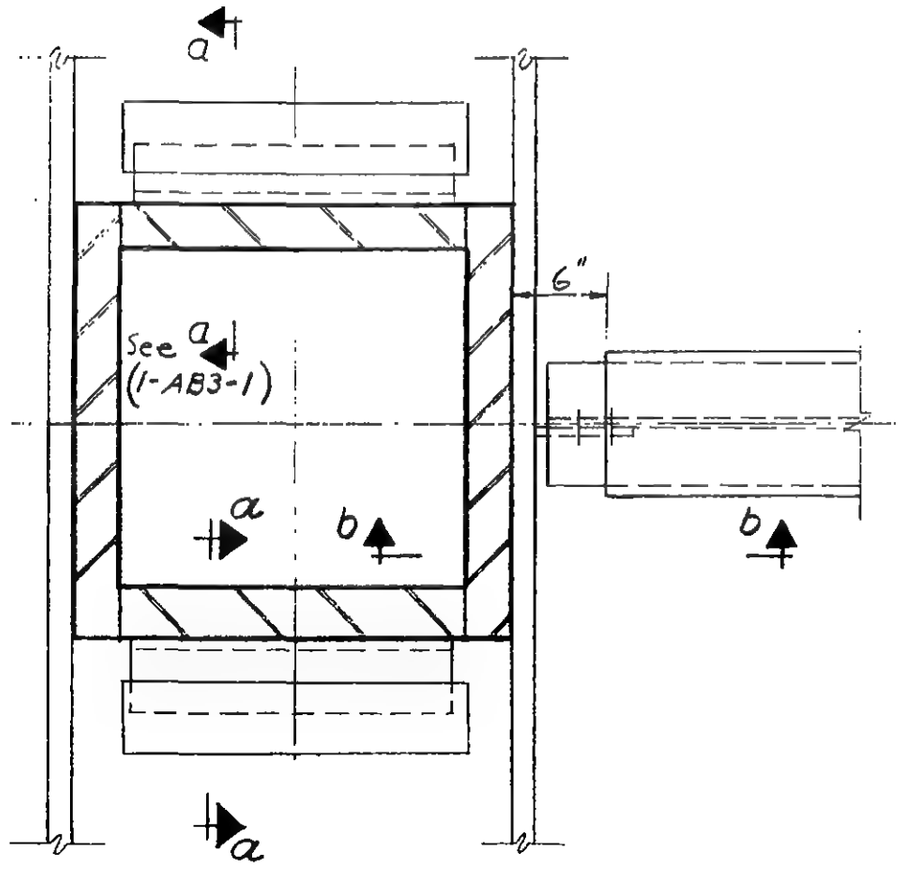

Plan

6-AB1-269

SKILLING - HELLE - CHRISTIANSEN - ROBERTSON Structural & Civil Engineers

PROJECT THE WORLD TRADE CENTER | TITLE CONNECTION DETAIL 781 A & B | DATE 2-9-68

REVISIONS

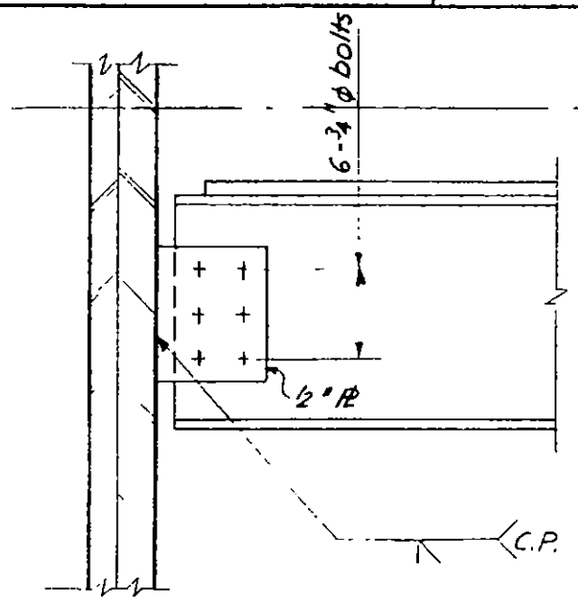

Section b-b
Detail 781 A

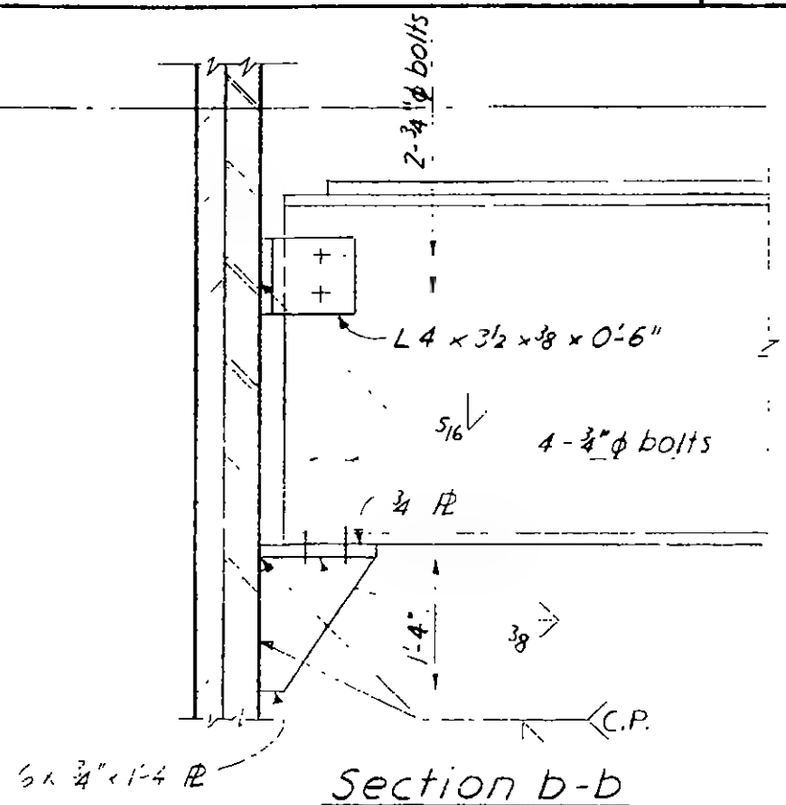

Section b-b
Detail 781 B

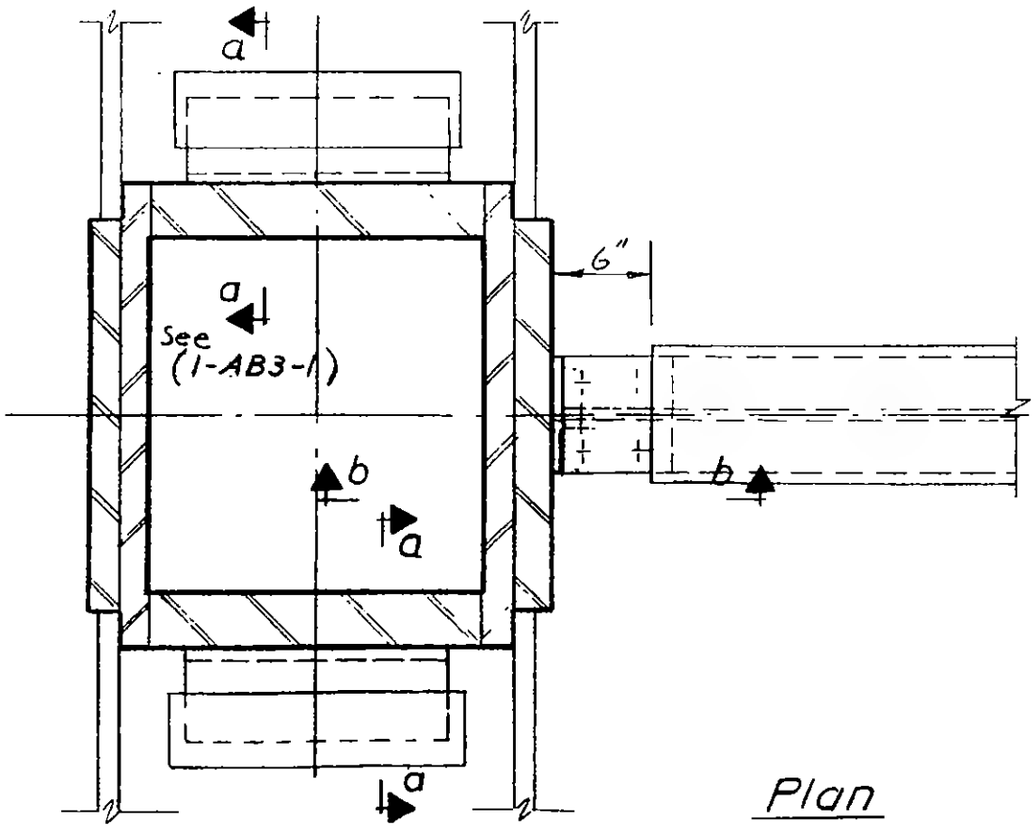

Plan

6-AB1-270

SKILLING - HELLE - CHRISTIANSEN - ROBERTSON Structural & Civil Engineers

PROJECT THE WORLD TRADE CENTER | TITLE CONNECTION DETAIL 782 A | DATE 2-9-68

REVISIONS

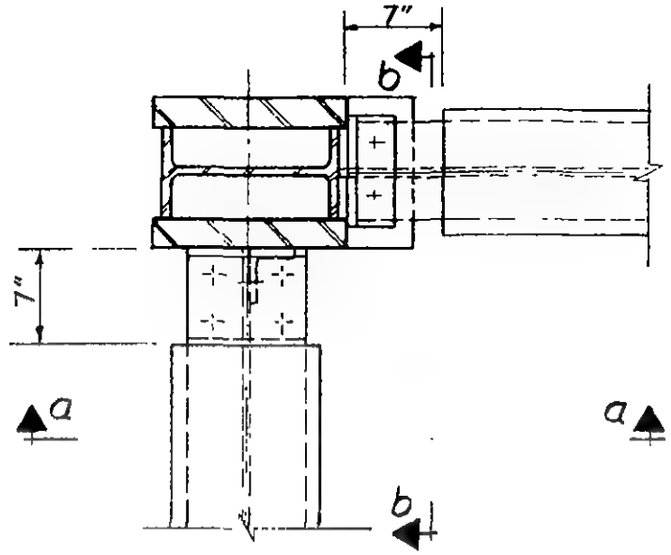

Plan

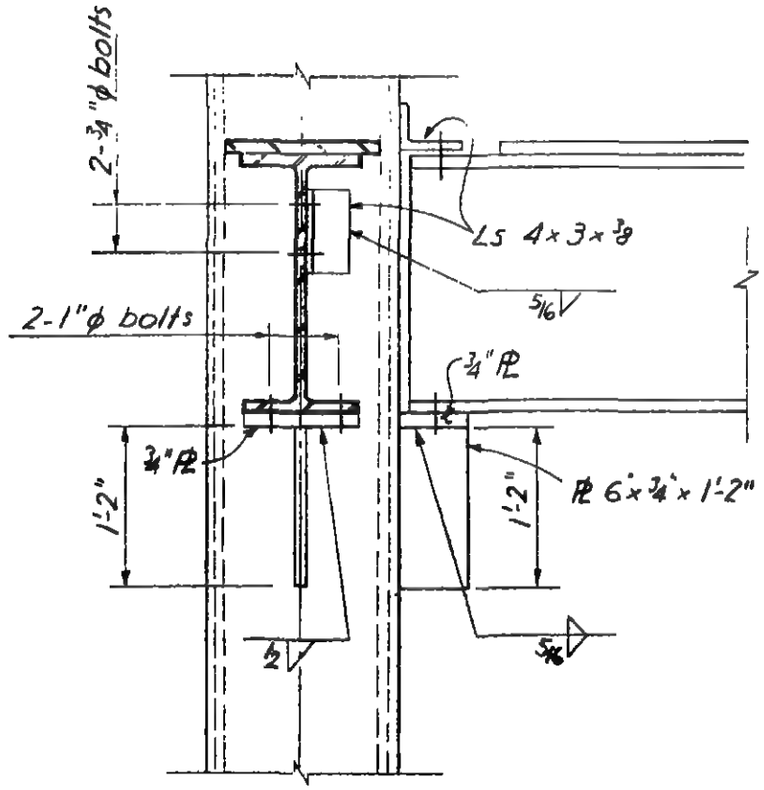

Section a-a

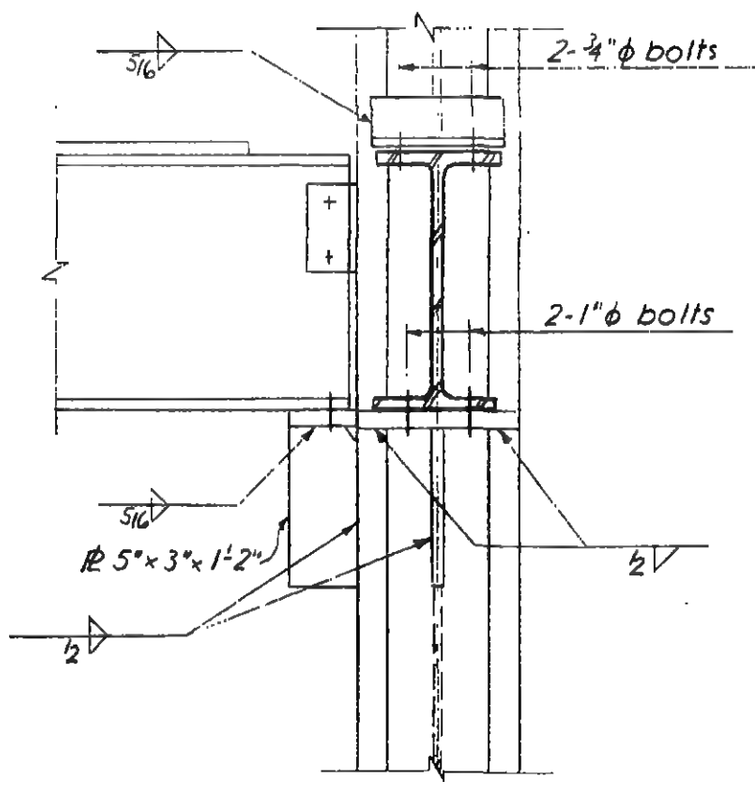

Section b-b

6-AB1-271

SKILLING - HELLE - CHRISTIANSEN - ROBERTSON Structural & Civil Engineers

PROJECT THE WORLD TRADE CENTER | TITLE CONNECTION DETAIL 783 A | DATE 2-9-68

REVISIONS

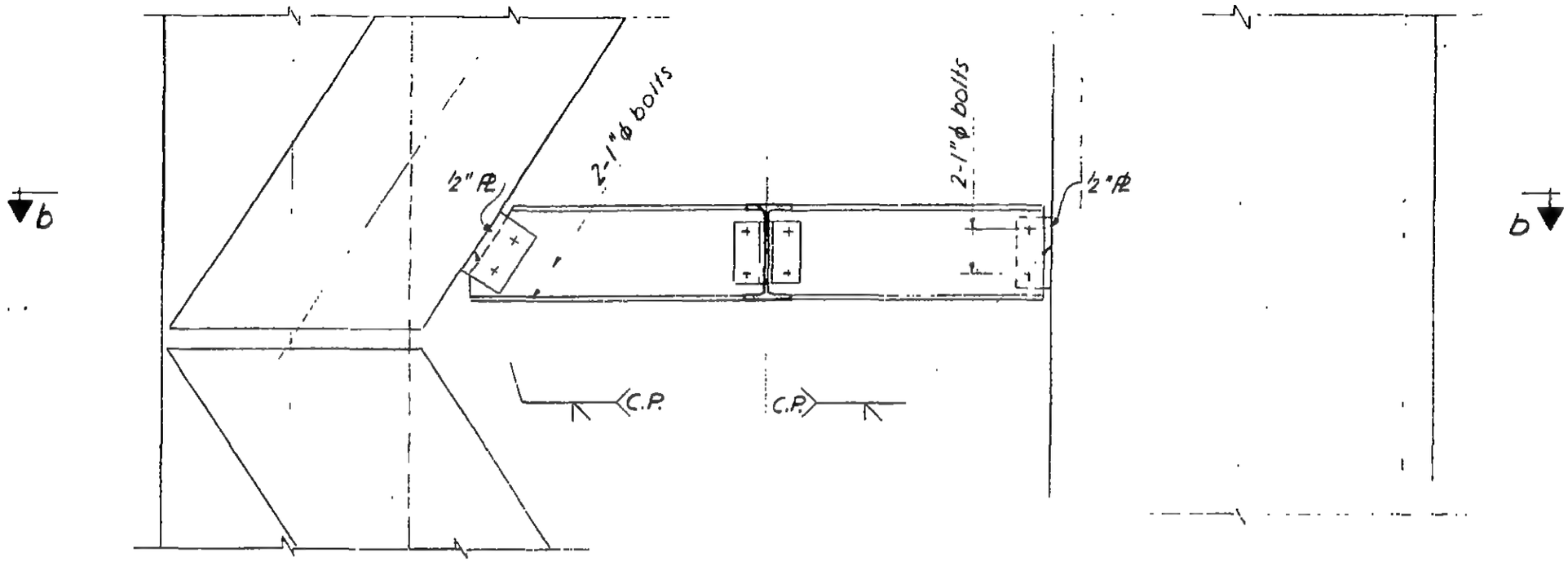

Section a-a

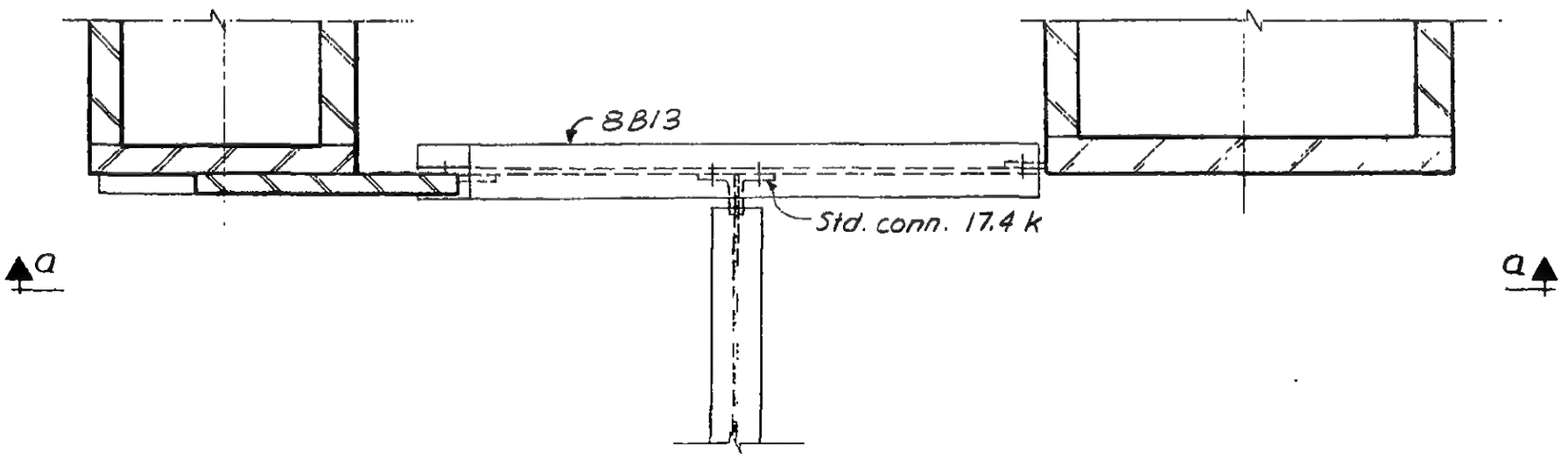

Plan b-b

6-AB1-272

SKILLING - HELLE - CHRISTIANSEN - ROBERTSON Structural & Civil Engineers

PROJECT THE WORLD TRADE CENTER | TITLE CONNECTION DETAIL 788 (788A) | DATE 11-16-67

REVISIONS

7-17-68

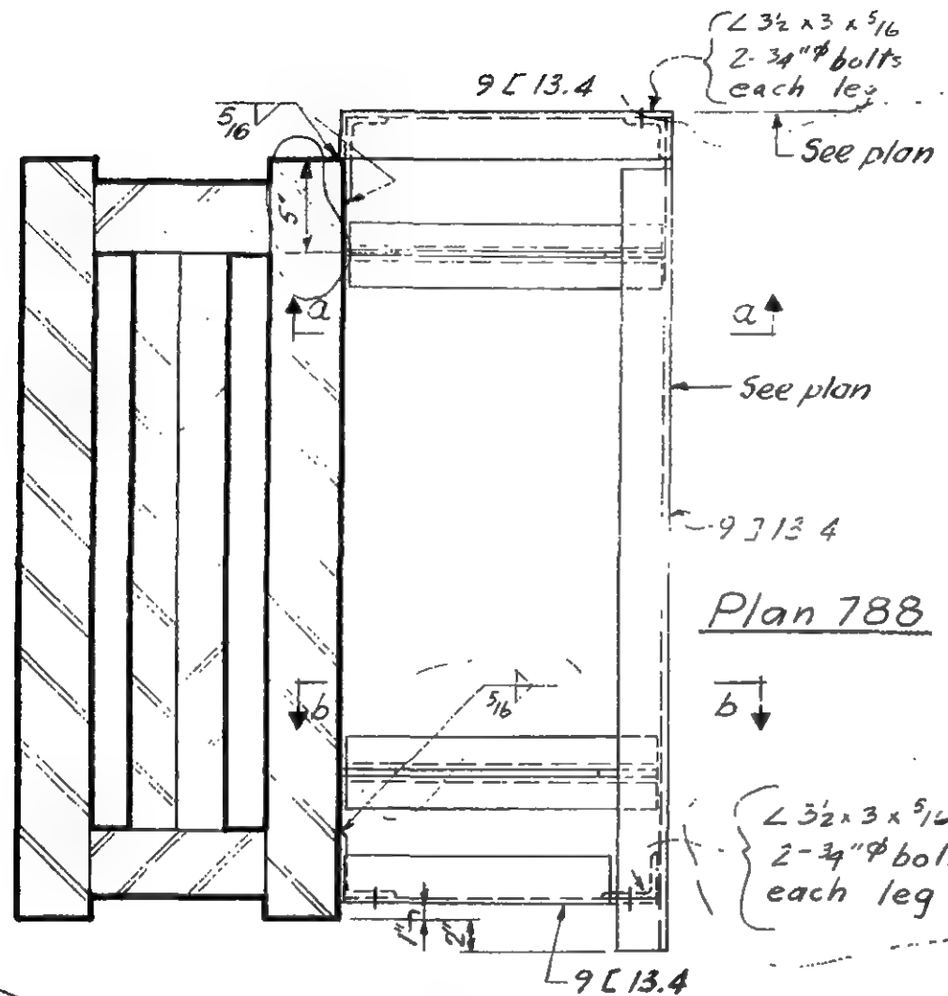

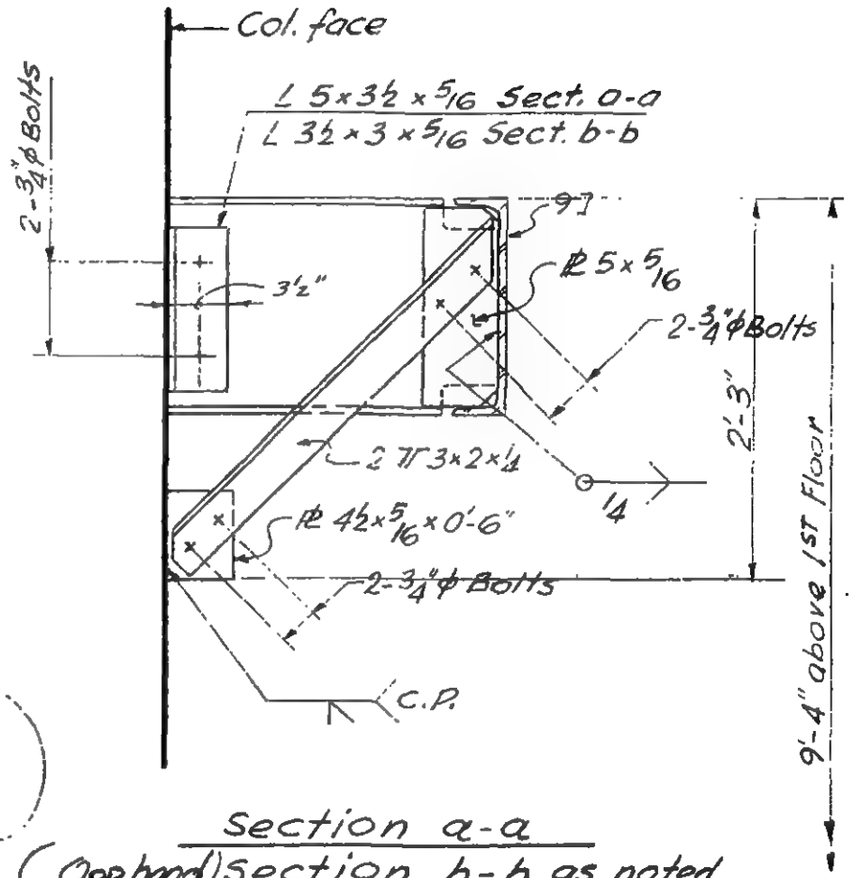

LICENSED PROFESSIONAL ENGINEER
LESLIE E. ROBERTSON
No. 34360
STATE OF NEW YORK
UNIVERSITY OF THE STATE OF NEW YORK

6-AB1-301

SKILLING - HELLE - CHRISTIANSEN - ROBERTSON Structural & Civil Engineers

PROJECT THE WORLD TRADE CENTER | TITLE CONNECTION DETAILS 789, 790, 791 | DATE 8-5-67

REVISIONS

11-16-67

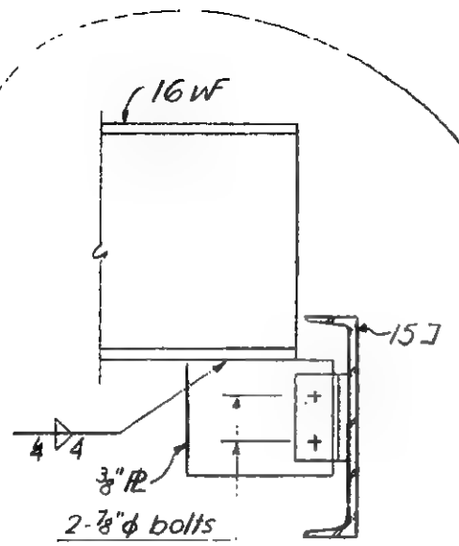

Detail 789

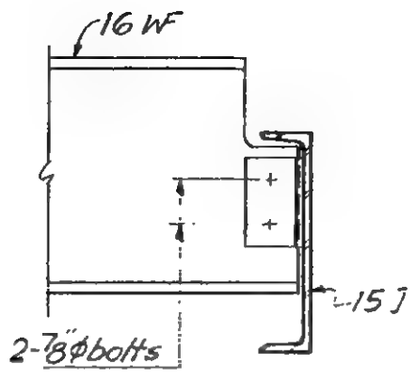

Detail 790

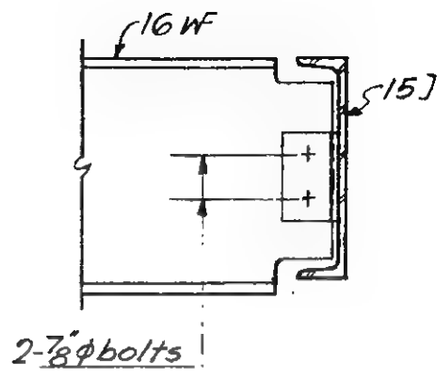

Detail 791

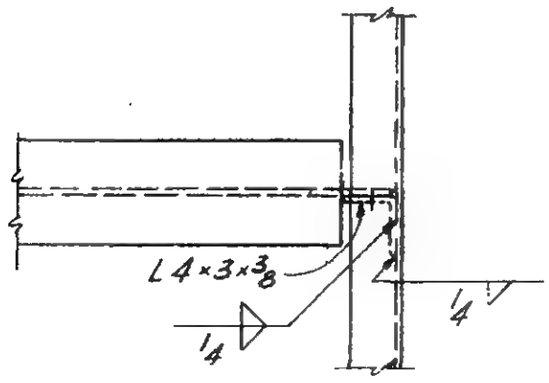

Plan where [cont.

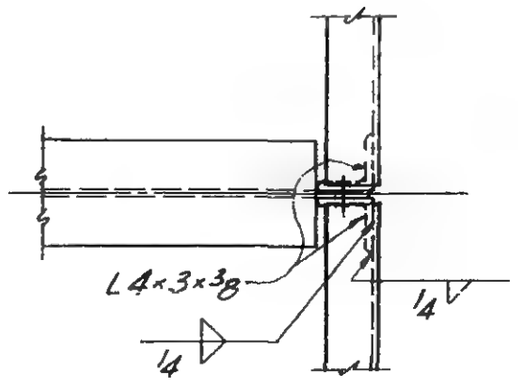

Plan at [splice

LICENSED PROFESSIONAL ENGINEER
LESLIE E. ROBERTSON
No. 34360
UNIVERSITY OF THE STATE OF NEW YORK

6-ABI-302

SKILLING - HELLE - CHRISTIANSEN - ROBERTSON Structural & Civil Engineers

PROJECT THE WORLD TRADE CENTER | TITLE CONNECTION DETAIL 792, 792A, 793, 793A, 794, 794A | DATE 8-5-67

REVISIONS

11-16-67

7-17-68

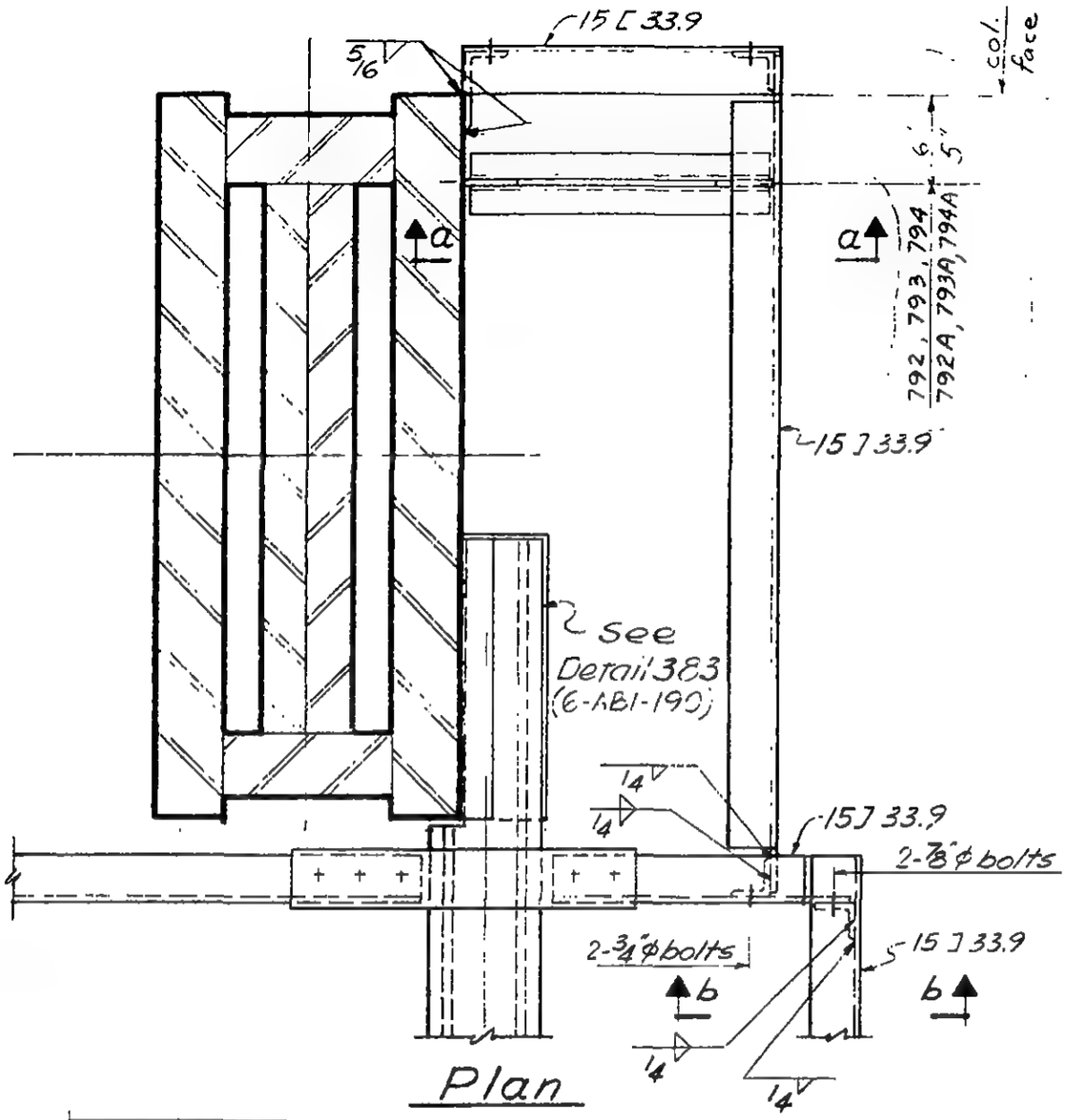

Plan

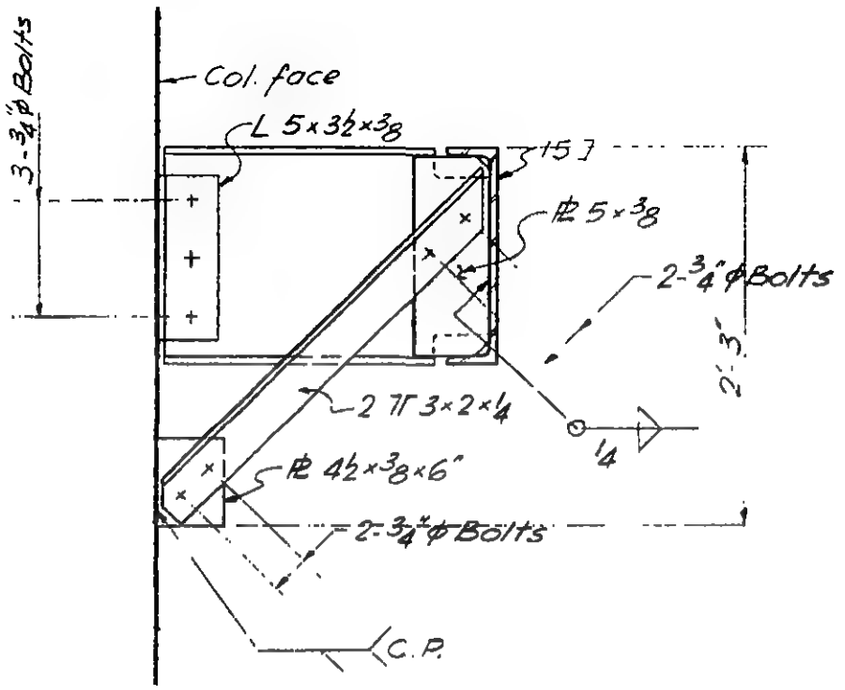

Section a-a

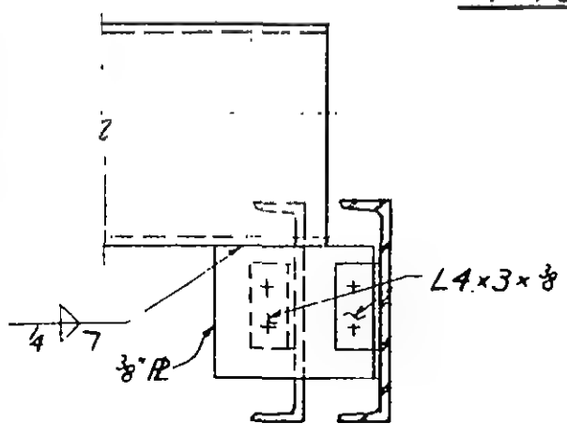

Section b-b
Detail 792, 792A

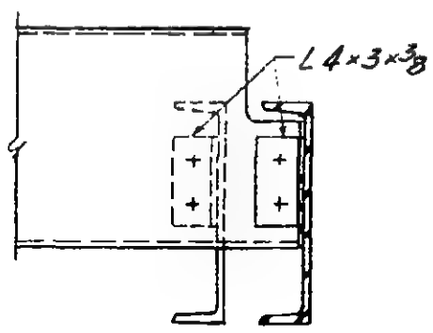

Section b-b
Detail 793, 793A

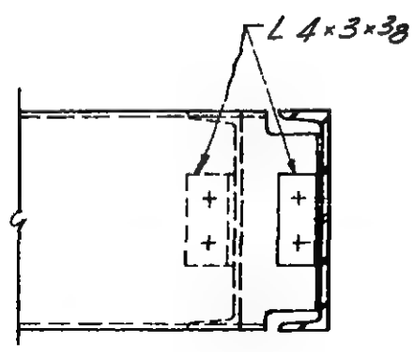

Section b-b
Detail 794, 794A

6-ABI-303

LICENSED PROFESSIONAL ENGINEER
LESLIE E. ROBERTSON
No. 34360
UNIVERSITY OF THE STATE OF NEW YORK

SKILLING - HELLE - CHRISTIANSEN - ROBERTSON Structural & Civil Engineers

PROJECT THE WORLD TRADE CENTER | TITLE CONNECTION DETAILS 795, 796, 797 | DATE 8-5-67

REVISIONS

11-16-67

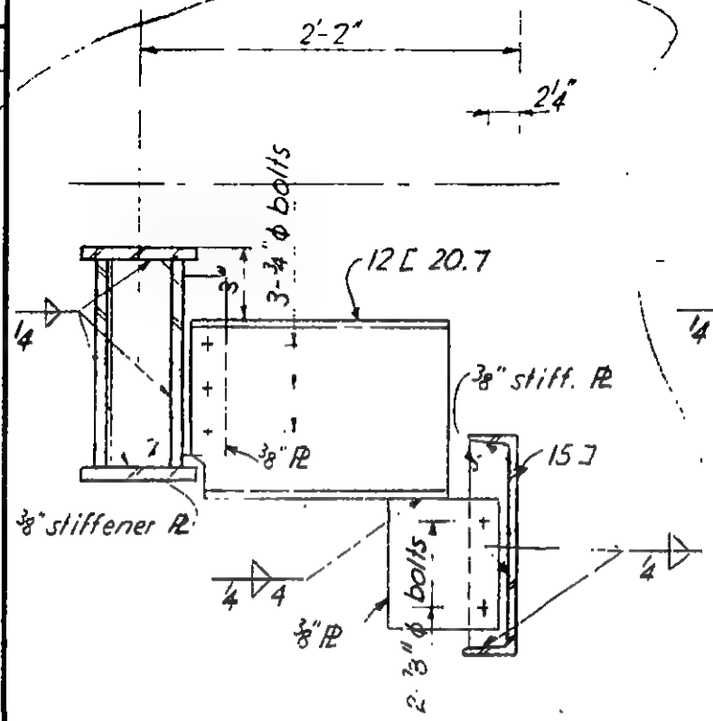

Detail 795

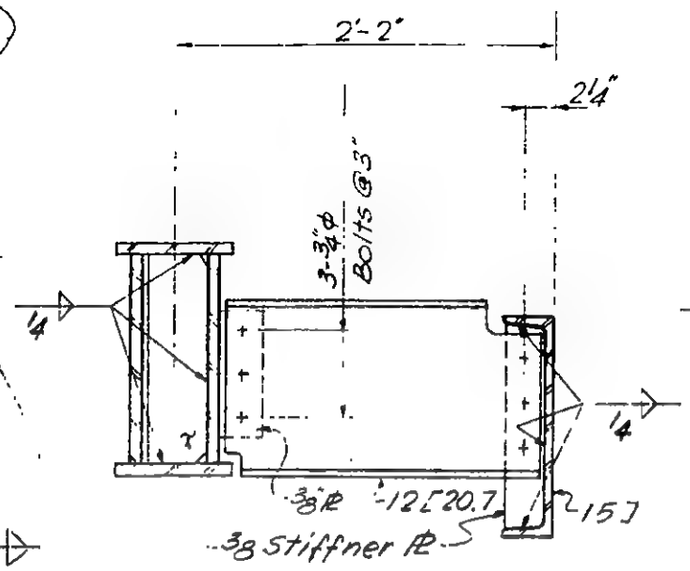

Detail 796

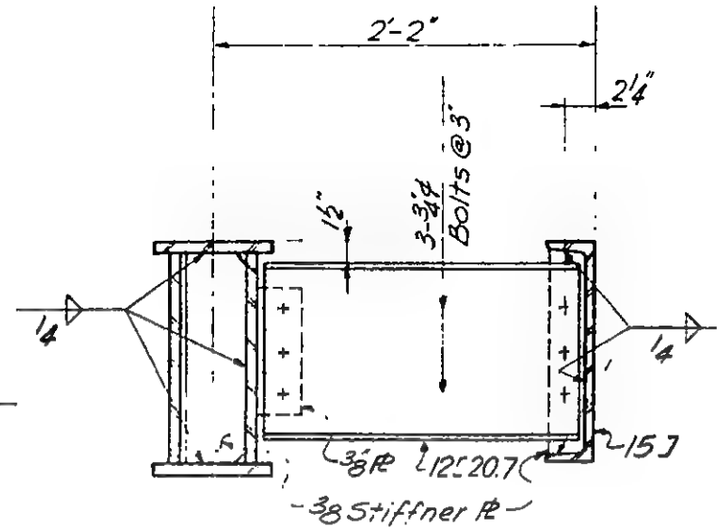

Detail 797

LICENSED PROFESSIONAL ENGINEER
LESLIE E. ROBERTSON
No. 34360
UNIVERSITY OF THE STATE OF NEW YORK

6-AB1-304

SKILLING - HELLE - CHRISTIANSEN - ROBERTSON Structural & Civil Engineers

PROJECT THE WORLD TRADE CENTER | TITLE CONNECTION DETAILS 798, 799 | DATE 8-5-67

REVISIONS

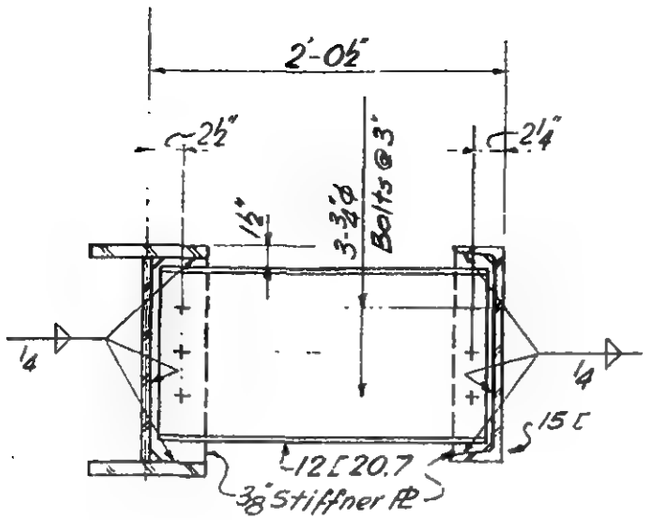

Detail 799

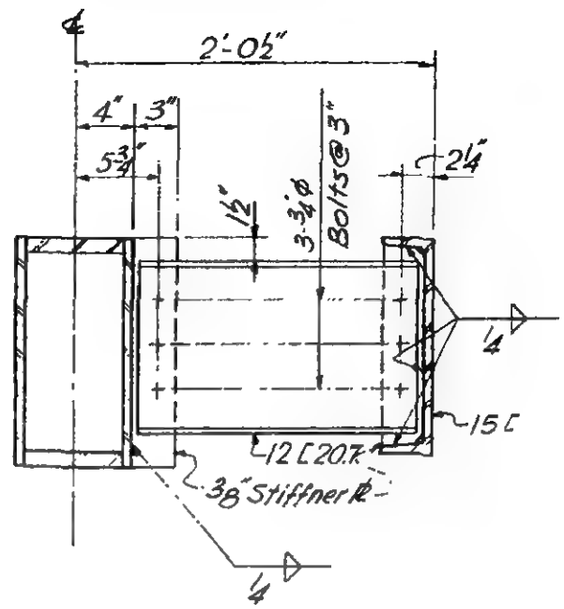

Detail 798

LICENSED PROFESSIONAL ENGINEER
LESLIE E. ROBERTSON
No. 34360
UNIVERSITY OF THE STATE OF NEW YORK

6-ABI-305

WORTHINGTON, SKILLING, HELLE & JACKSON Civil & Structural Engineers

PROJECT THE WORLD TRADE CENTER | TITLE CONNECTION DETAIL 800A | DATE 6-19-67

REVISIONS

8-14-67

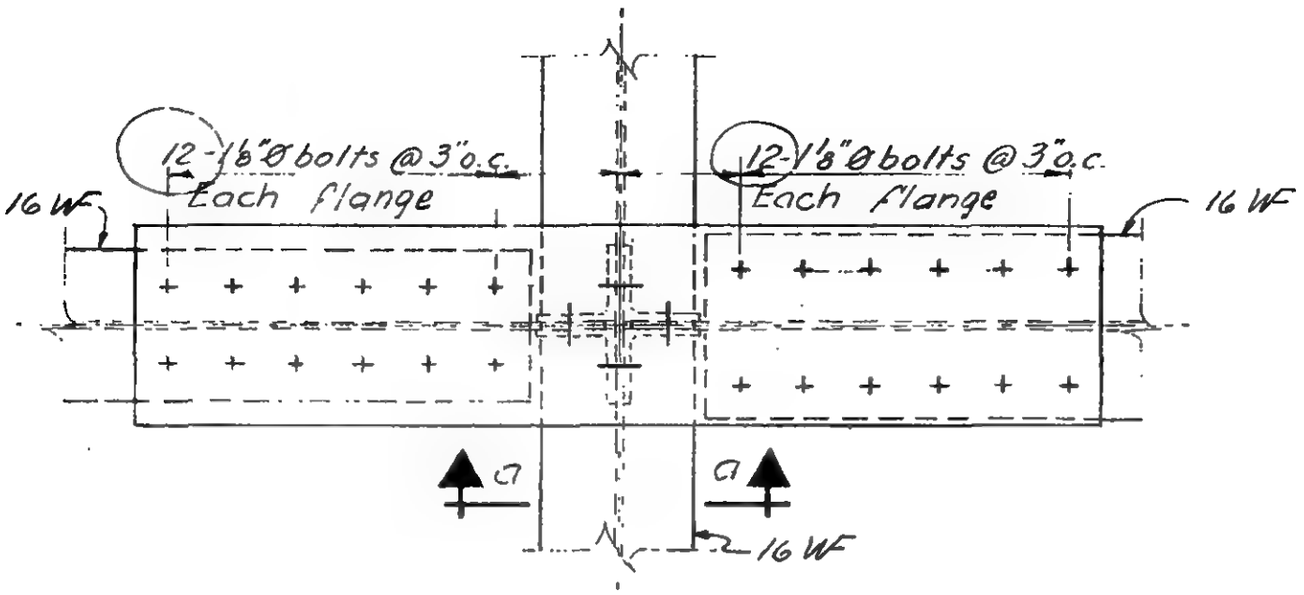

PLAN

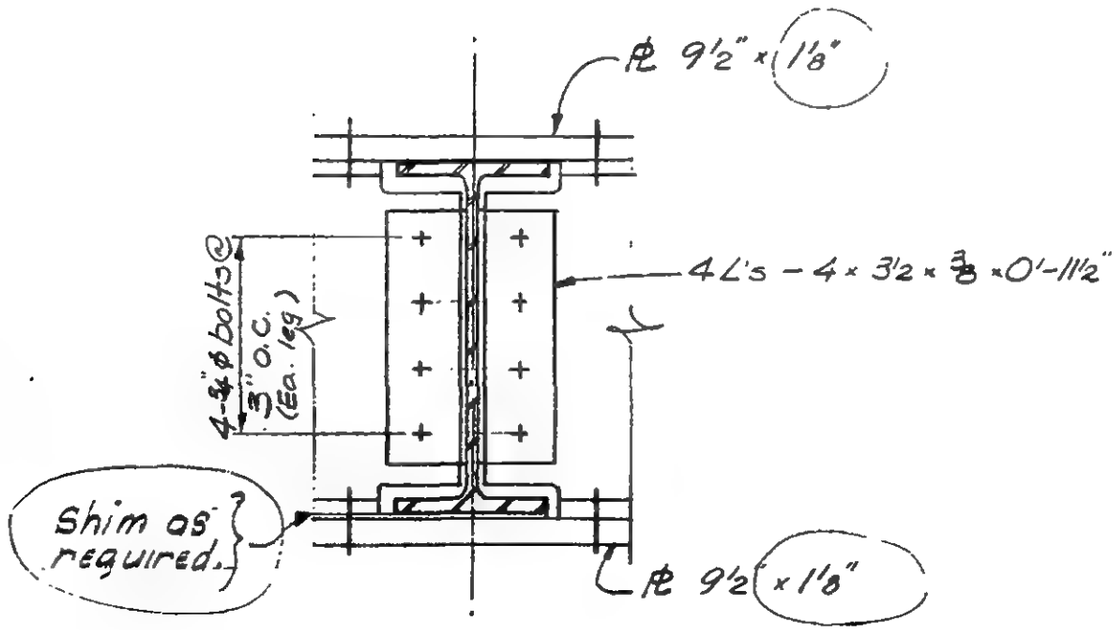

SECTION a-a

LICENSED PROFESSIONAL ENGINEER LESLIE E. ROBERTSON No. 34360 UNIVERSITY OF THE STATE OF NEW YORK

6-AB1-306

SKILLING - HELLE - CHRISTIANSEN - ROBERTSON Structural & Civil Engineers

PROJECT THE WORLD TRADE CENTER | TITLE CONNECTION DETAIL 800B | DATE 8.14.67

REVISIONS

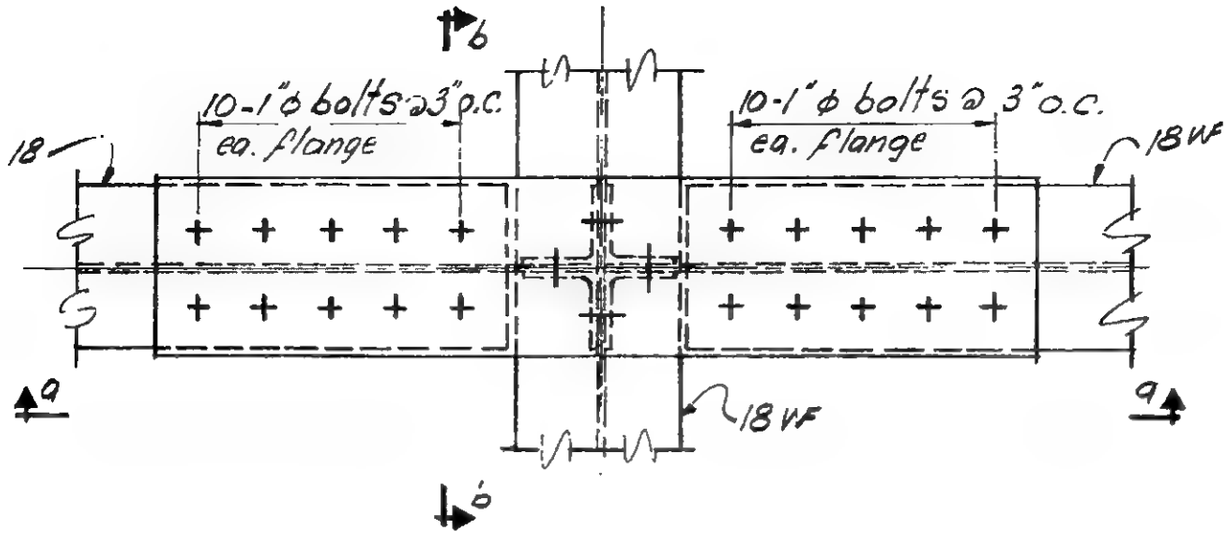

PLAN

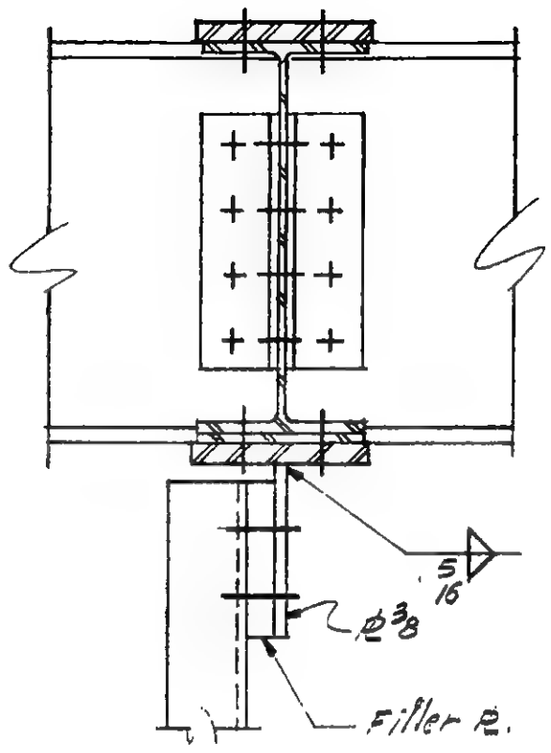

Section b-b

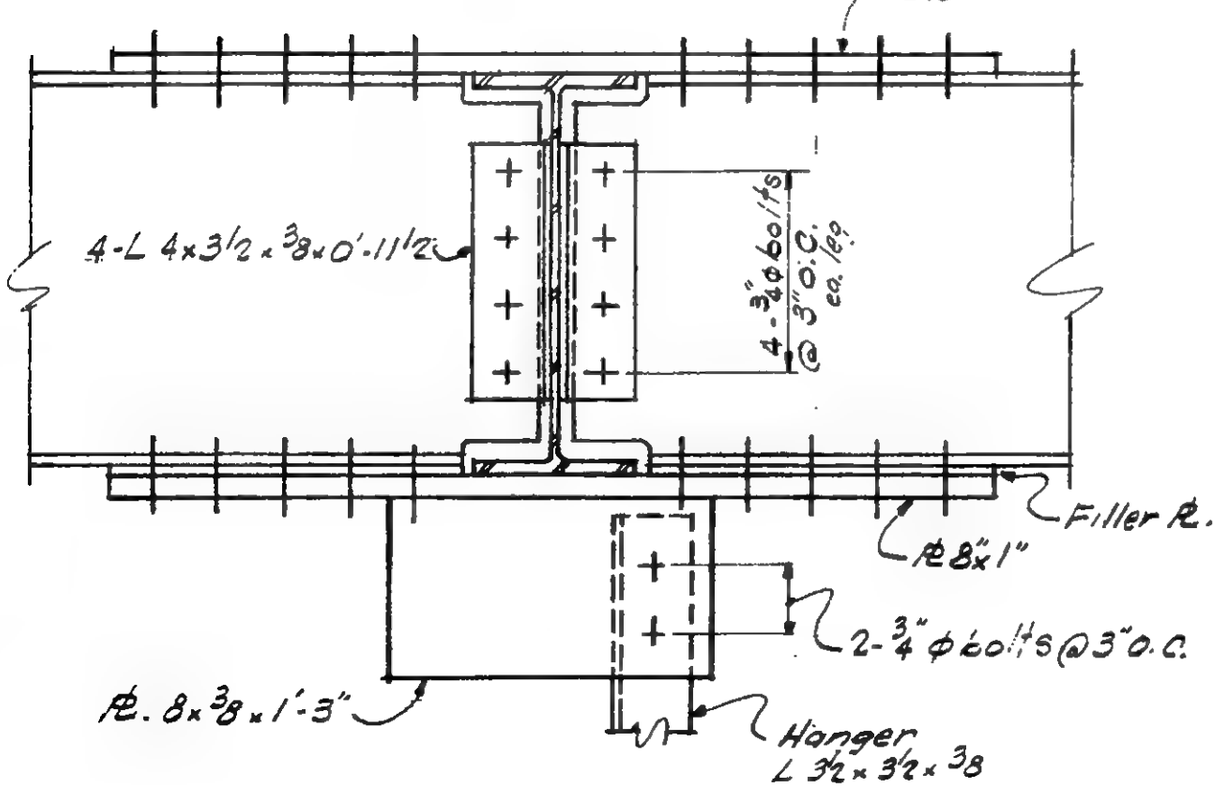

Section a-a

LICENSED PROFESSIONAL ENGINEER
LESLIE E. ROBERTSON
No. 34360
UNIVERSITY OF THE STATE OF NEW YORK

6-AB1-306.1

WORTHINGTON, SKILLING, HELLE & JACKSON — Civil & Structural Engineers

PROJECT THE WORLD TRADE CENTER | TITLE CONNECTION DETAIL 801A | DATE 6-19-67

REVISIONS

8-14-67

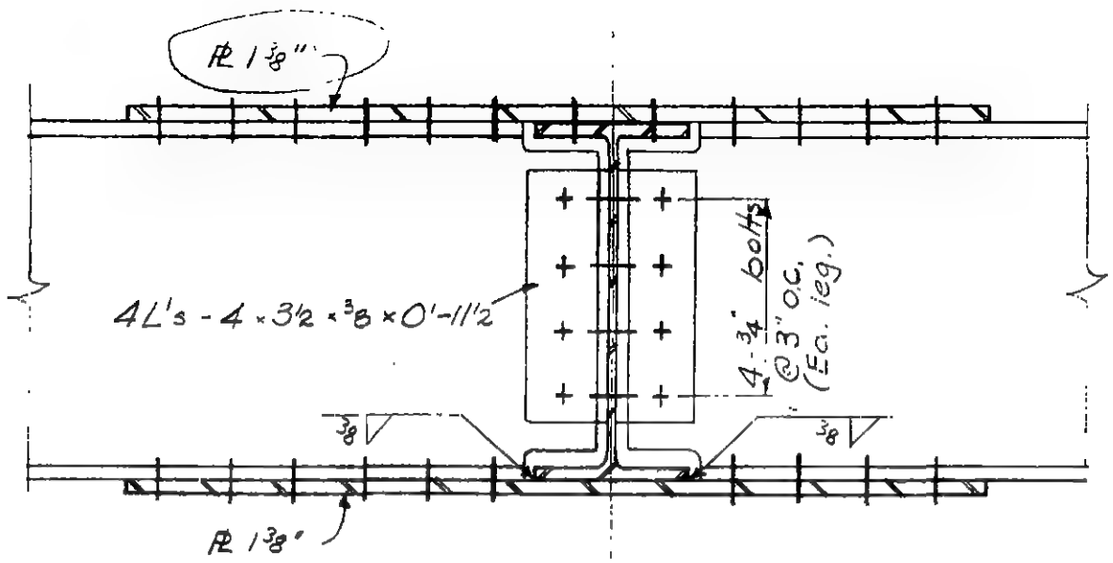

SECTION a-a

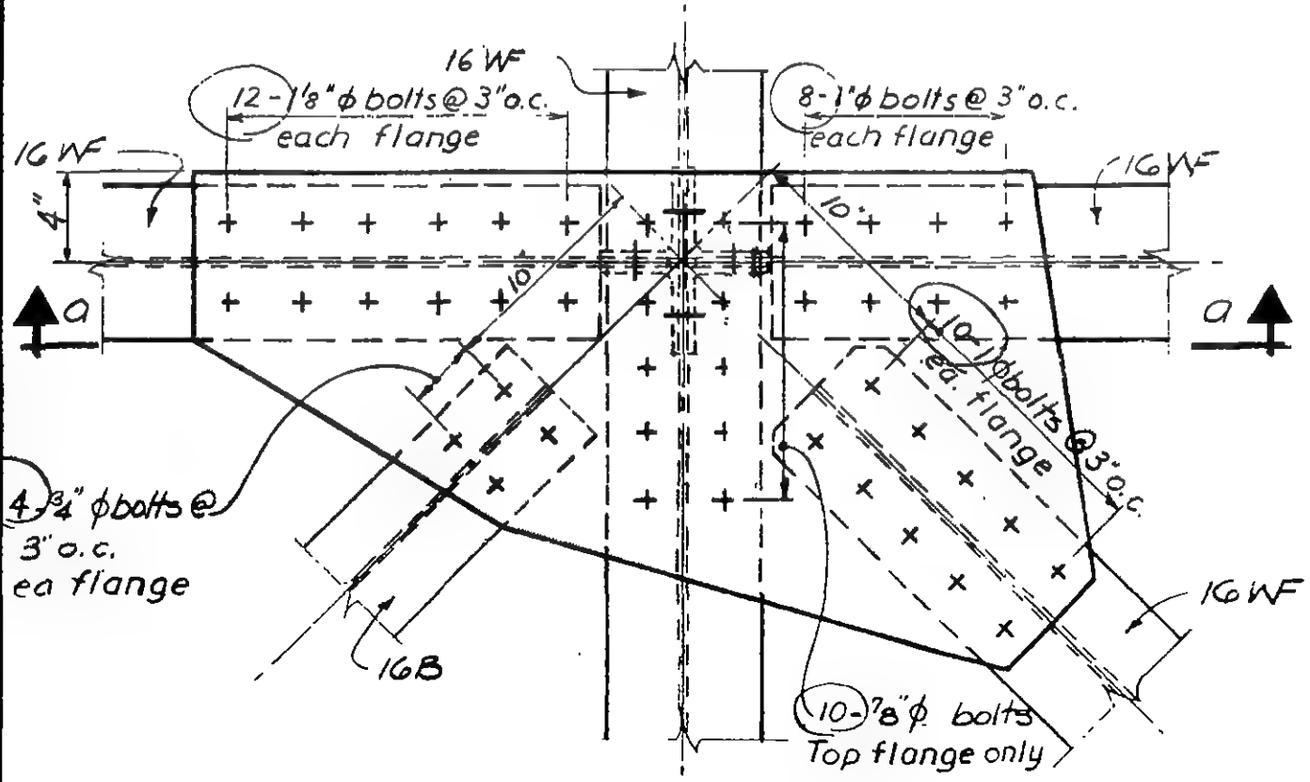

PLAN

LICENSED PROFESSIONAL ENGINEER — LESLIE E. ROBERTSON — No. 34360 — STATE OF NEW YORK

6-AB1-307

SKILLING - HELLE - CHRISTIANSEN - ROBERTSON Structural & Civil Engineers

PROJECT THE WORLD TRADE CENTER | TITLE CONNECTION DETAIL 801 B | DATE 8.14.67

REVISIONS

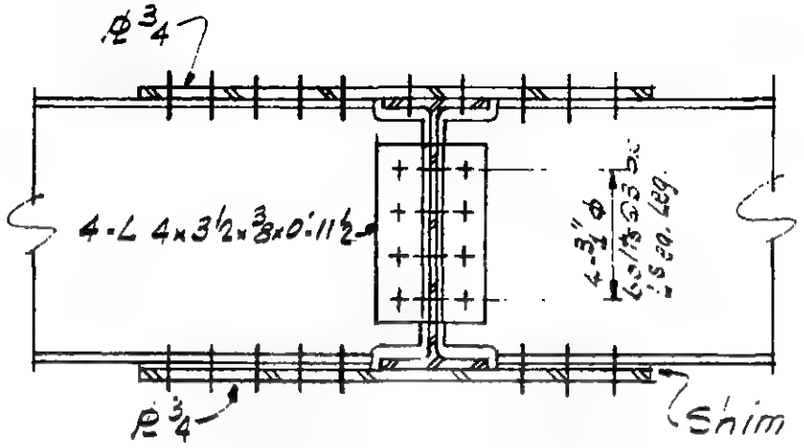

Section a-a

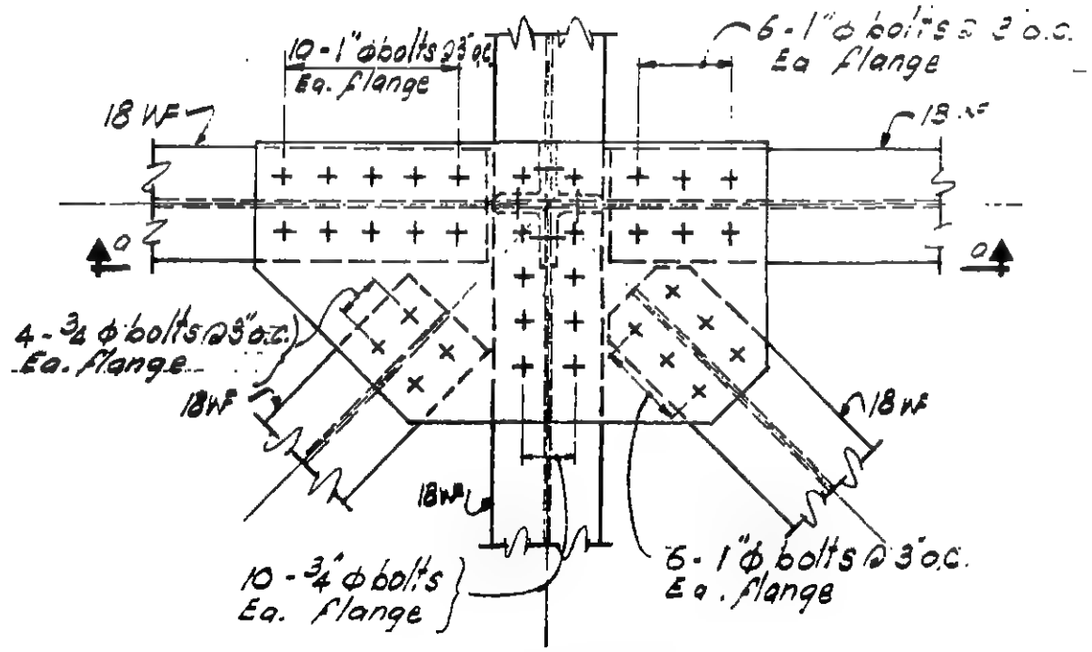

PLAN

LICENSED PROFESSIONAL ENGINEER
LESLIE E. ROBERTSON
No. 34360
UNIVERSITY OF THE STATE OF NEW YORK

6-AB1-307.1

WORTHINGTON, SKILLING, HELLE & JACKSON — Civil & Structural Engineers

PROJECT THE WORLD TRADE CENTER | TITLE CONNECTION DETAIL 802A | DATE 6-19-67

REVISIONS

8.14.67

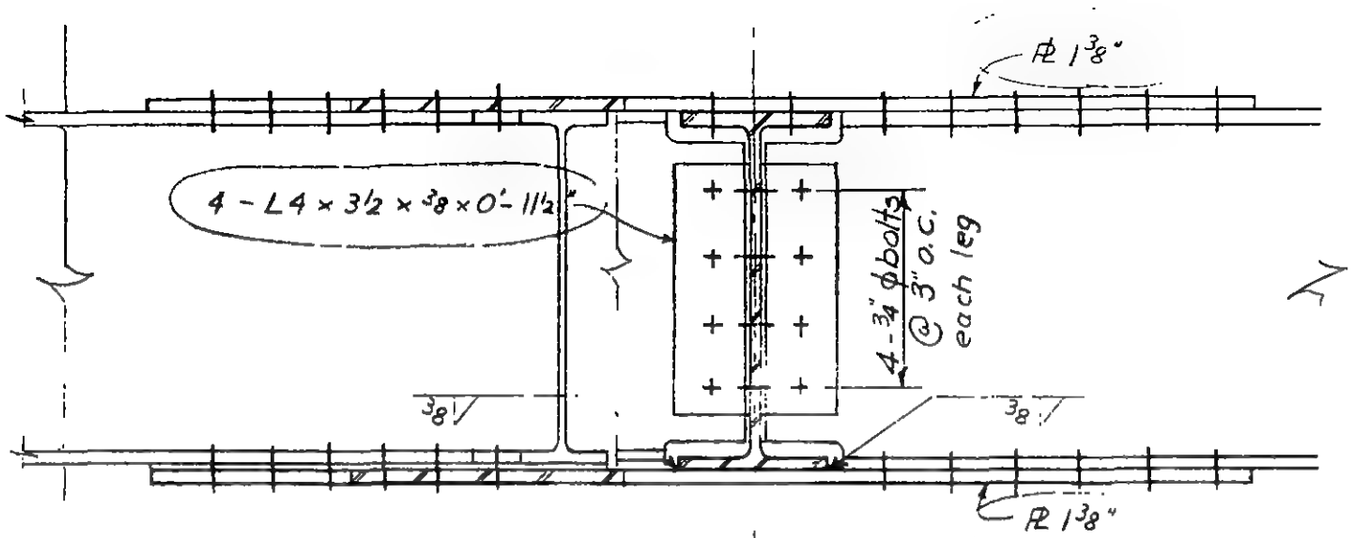

SECTION a-a

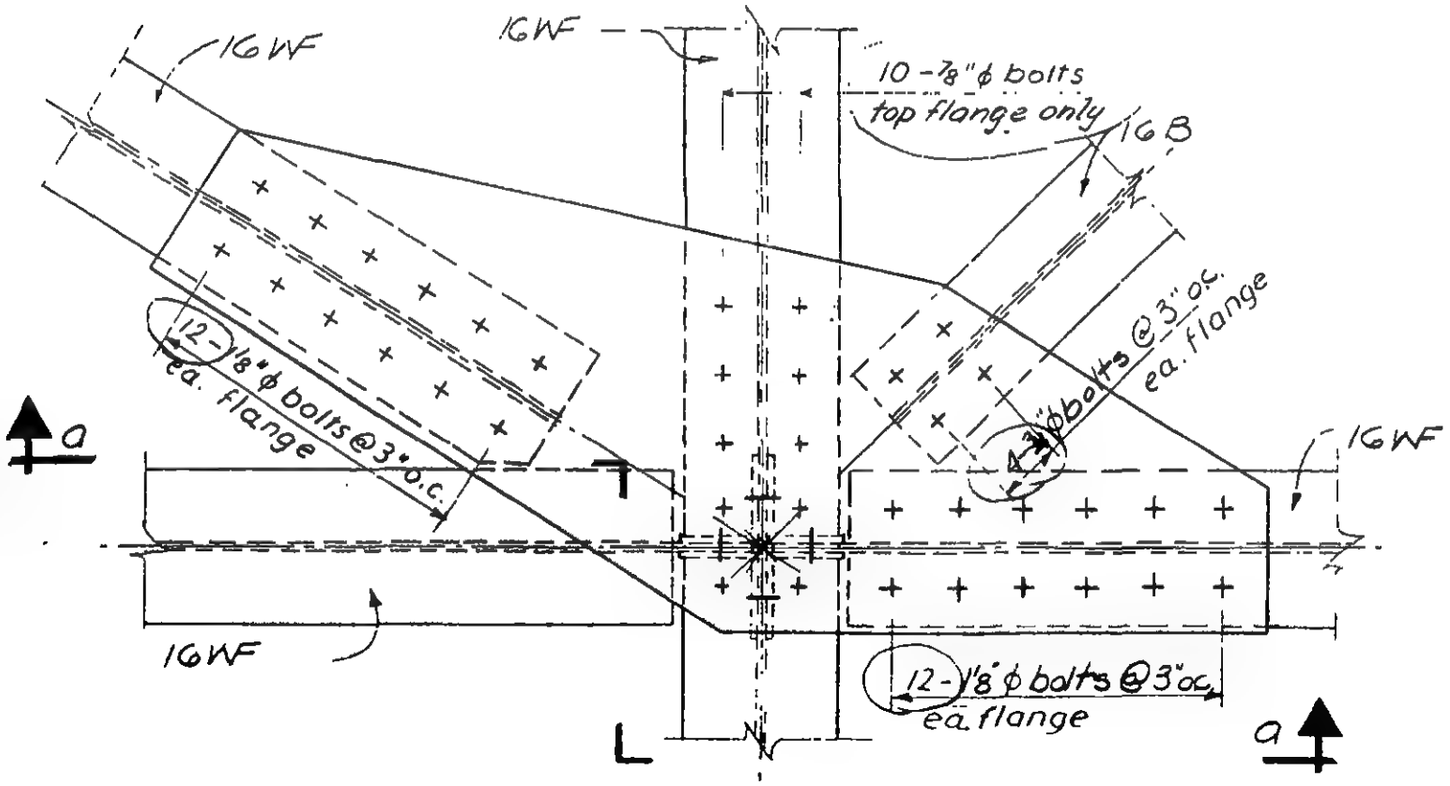

PLAN

LICENSED PROFESSIONAL ENGINEER — LESLIE E. ROBERTSON — No. 34360 — UNIVERSITY OF THE STATE OF NEW YORK

G-AB1-308

SKILLING - HELLE - CHRISTIANSEN - ROBERTSON Structural & Civil Engineers

PROJECT THE WORLD TRADE CENTER | TITLE CONNECTION DETAIL 802 B | DATE 8.14.67

REVISIONS

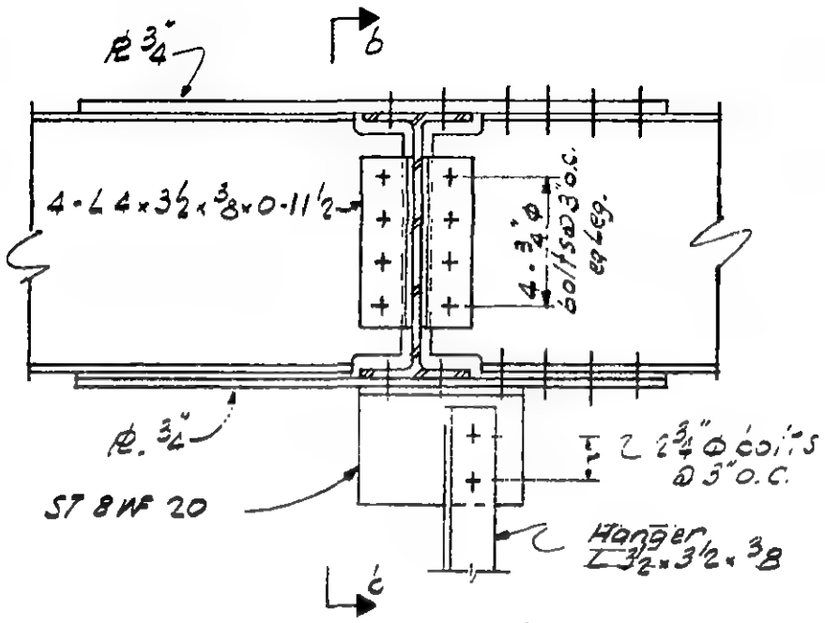

Section a-a

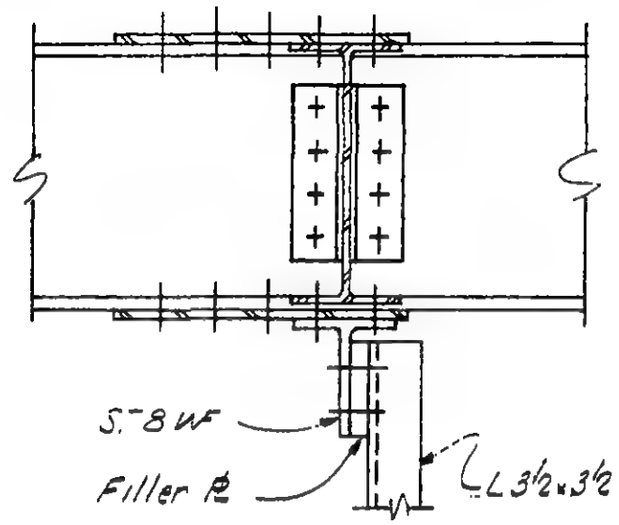

Section b-b

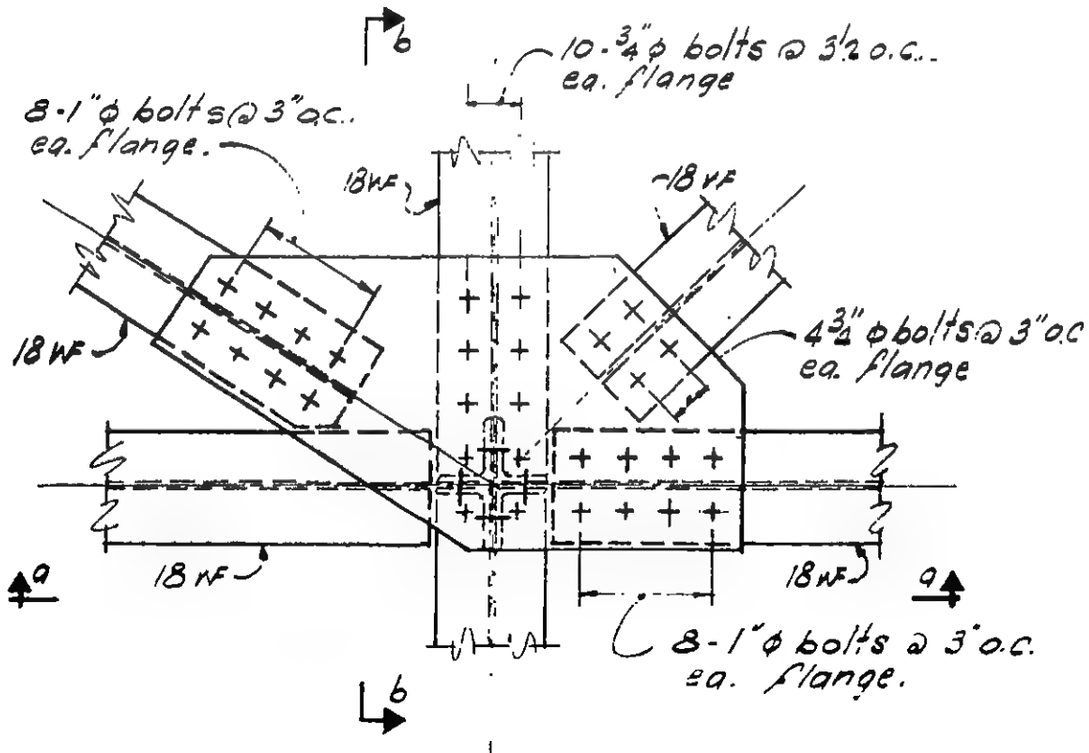

PLAN

LICENSED PROFESSIONAL ENGINEER LESLIE E. ROBERTSON No. 34360 UNIVERSITY OF THE STATE OF NEW YORK

6-AB1-308.1

WORTHINGTON, SKILLING, HELLE & JACKSON — Civil & Structural Engineers

PROJECT THE WORLD TRADE CENTER | TITLE CONNECTION DETAIL 803 B | DATE 6-19-67

REVISIONS

8.14.67

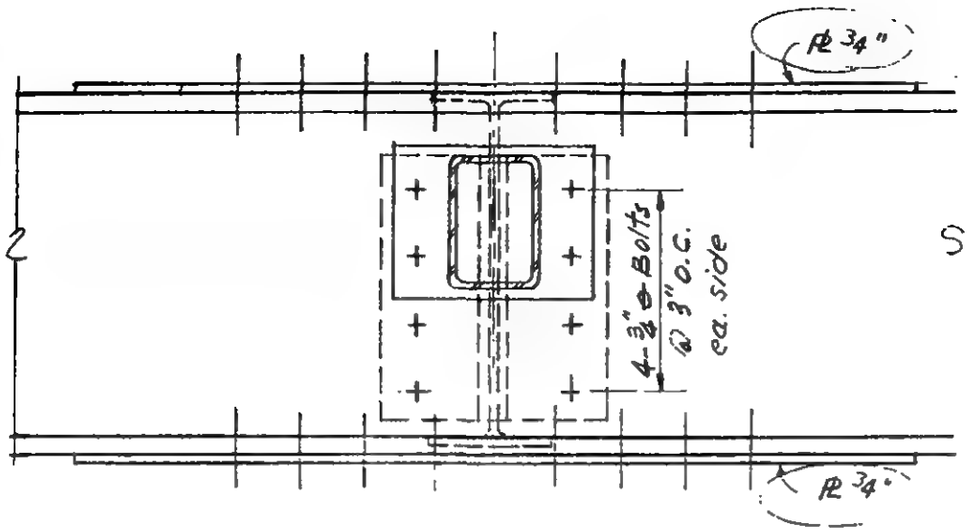

SECTION a-a

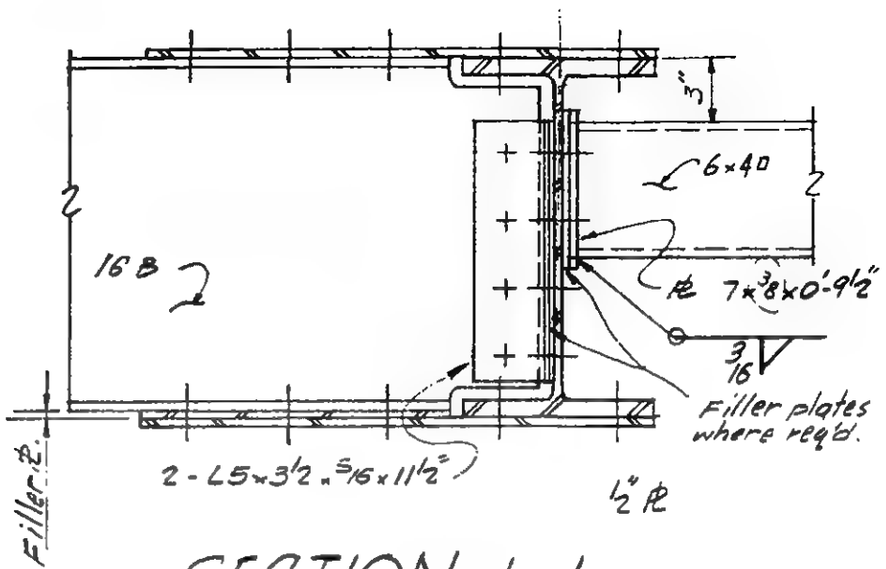

SECTION b-b

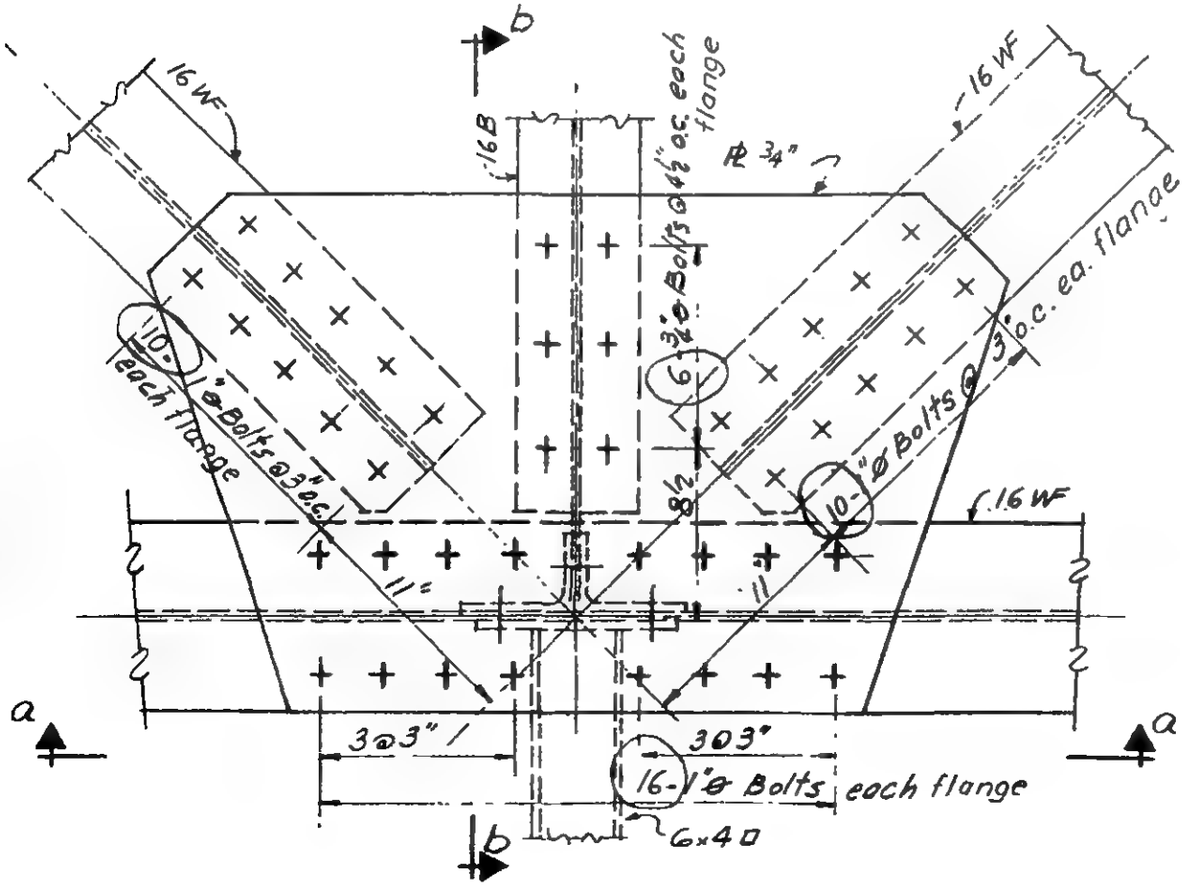

PLAN

LICENSED PROFESSIONAL ENGINEER — LESLIE E. ROBERTSON — No. 34360 — UNIVERSITY OF THE STATE OF NEW YORK

G-AB1-309

SKILLING - HELLE - CHRISTIANSEN - ROBERTSON Structural & Civil Engineers

PROJECT THE WORLD TRADE CENTER | TITLE CONNECTION DETAIL 803 A&C | DATE 8-14-67

REVISIONS

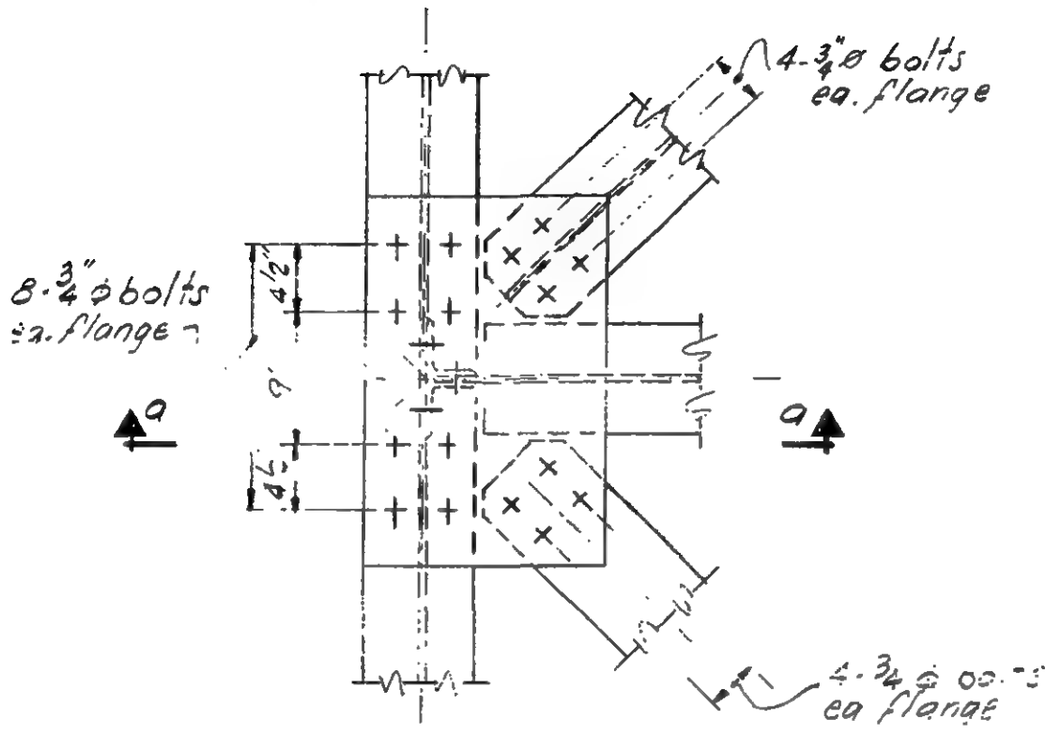

PLAN

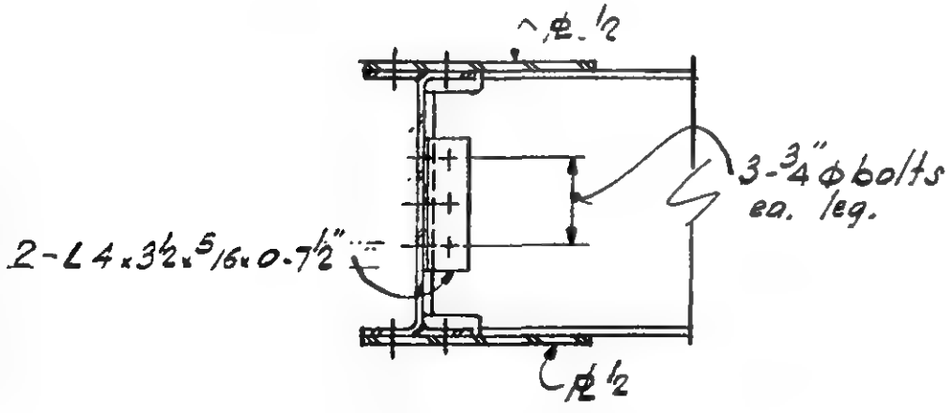

Section a-a

Note:
Detail 803-A - All beams 16 WF
Detail 804-C - All beams 18 WF

LICENSED PROFESSIONAL ENGINEER
LESLIE E. ROBERTSON
No. 34360
UNIVERSITY OF THE STATE OF NEW YORK

6-AB1-309.1

SKILLING - HELLE - CHRISTIANSEN - ROBERTSON Structural & Civil Engineers

PROJECT THE WORLD TRADE CENTER | TITLE CONNECTION DETAIL 803 D | DATE 8-14-67

REVISIONS

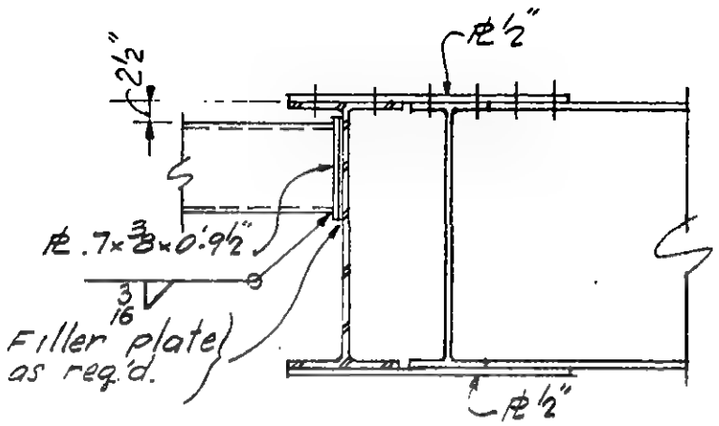

Section a-a

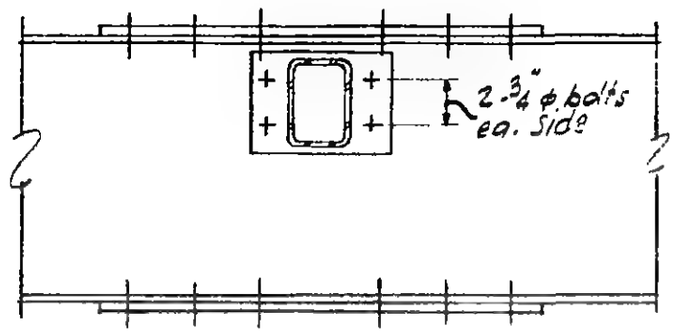

Section b-b

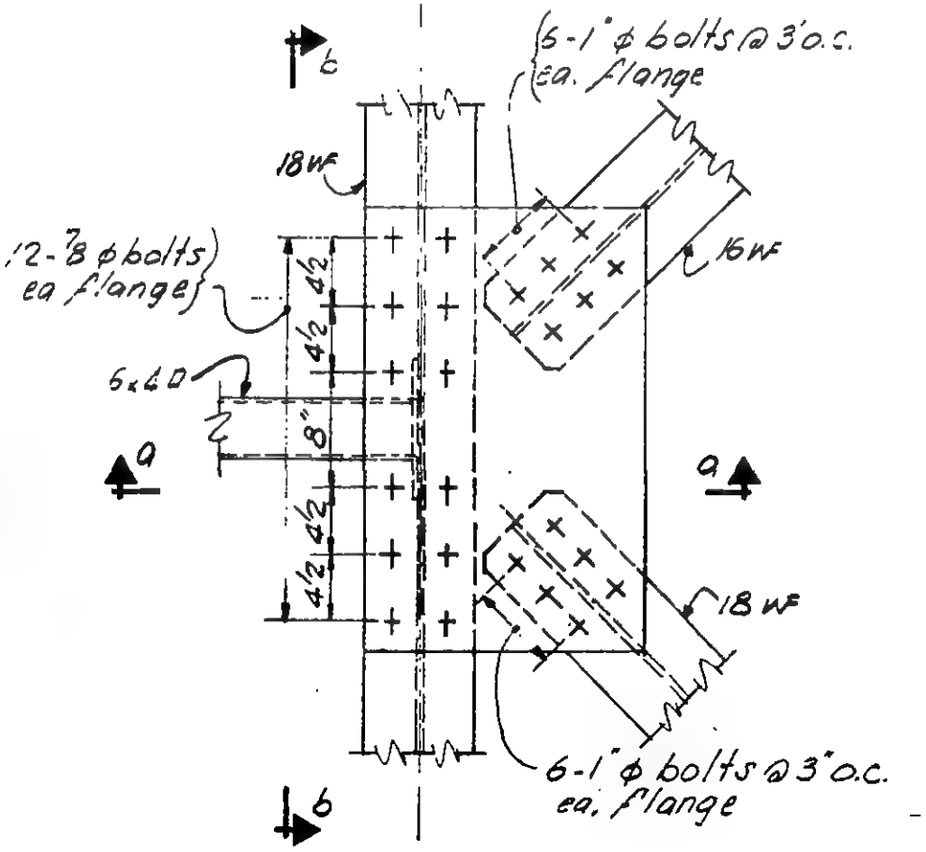

PLAN

LICENSED PROFESSIONAL ENGINEER LESLIE E. ROBERTSON No. 34360 UNIVERSITY OF THE STATE OF NEW YORK

6-AB1-309.2

SKILLING - HELLE - CHRISTIANSEN - ROBERTSON Structural & Civil Engineers

PROJECT THE WORLD TRADE CENTER | TITLE CONNECTION DETAIL 803 E | DATE 8-14-57

REVISIONS

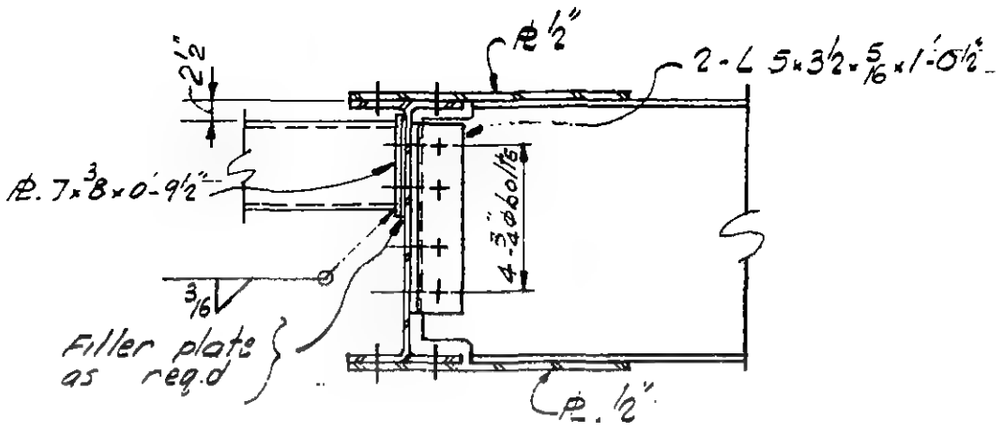

Section a-a

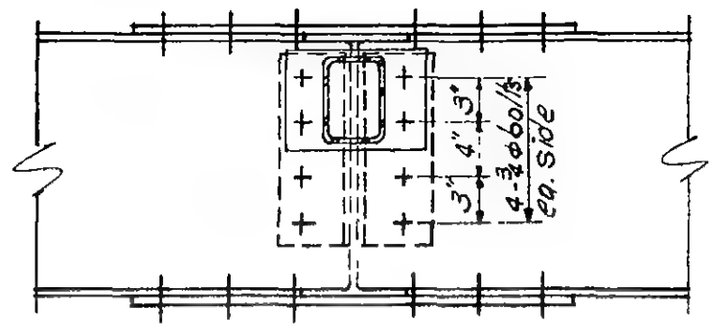

Section b-b

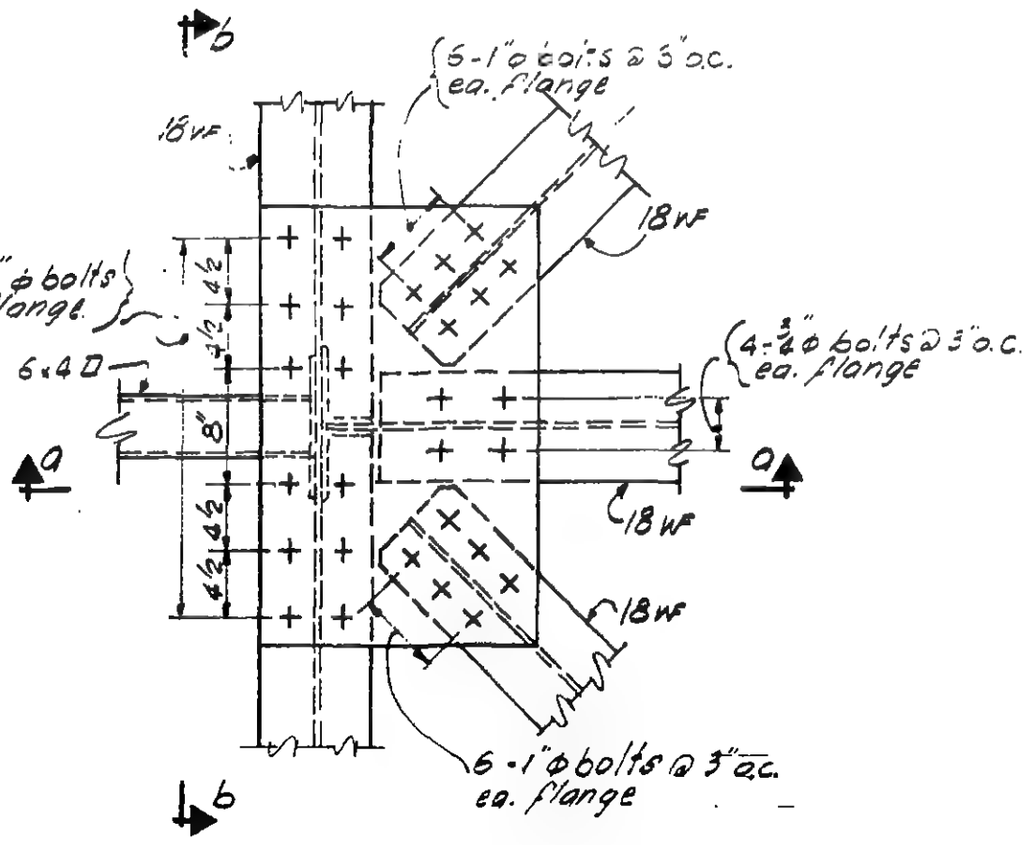

PLAN

LICENSED PROFESSIONAL ENGINEER
LESLIE E. ROBERTSON
No. 34360
UNIVERSITY OF THE STATE OF NEW YORK

6-ABI-309.3

WORTHINGTON, SKILLING, HELLE & JACKSON — Civil & Structural Engineers

PROJECT THE WORLD TRADE CENTER | TITLE CONNECTION DETAIL 804A | DATE 6-19-67

REVISIONS

8.14.67

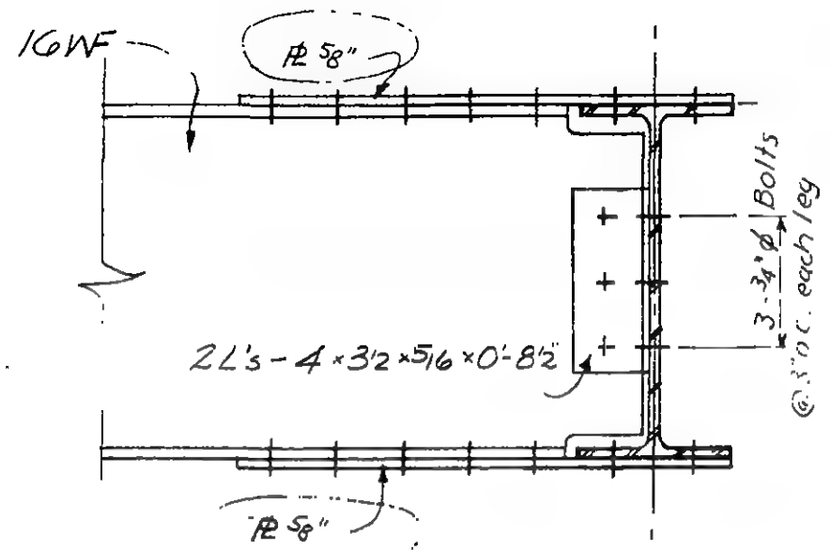

SECTION a-a

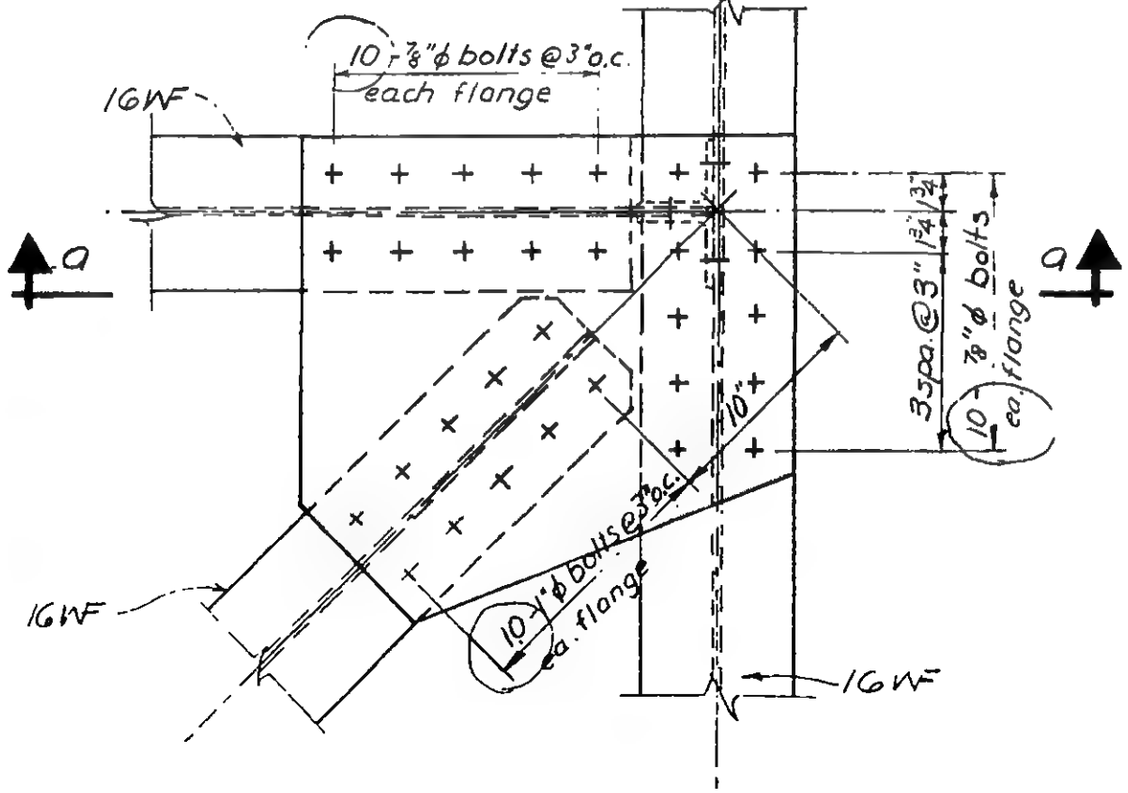

PLAN

LICENSED PROFESSIONAL ENGINEER
LESLIE E. ROBERTSON
No. 34360
UNIVERSITY OF THE STATE OF NEW YORK

6-AB1-310

SKILLING - HELLE - CHRISTIANSEN - ROBERTSON Structural & Civil Engineers

PROJECT THE WORLD TRADE CENTER | TITLE CONNECTION DETAIL 804 B | DATE 8-14-67

REVISIONS -

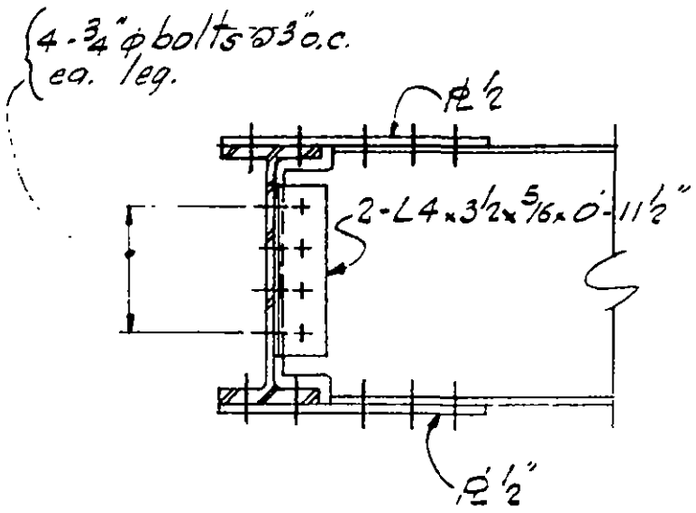

Section a-a

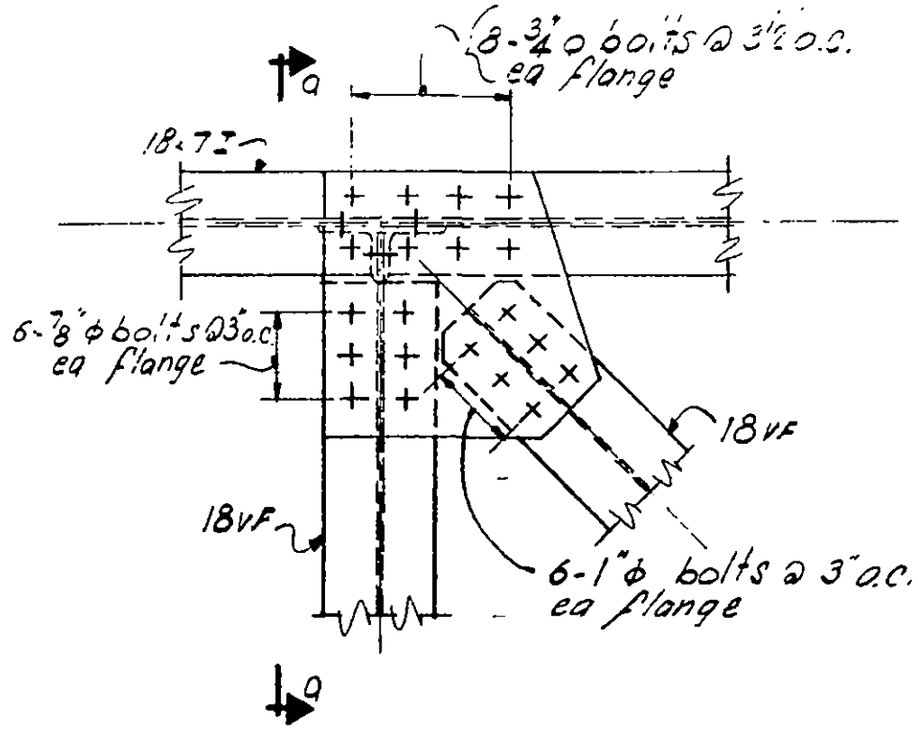

PLAN

LICENSED PROFESSIONAL ENGINEER
LESLIE E. ROBERTSON
No. 34360
UNIVERSITY OF THE STATE OF NEW YORK

6-AB1-310.1

SKILLING - HELLE - CHRISTIANSEN - ROBERTSON Structural & Civil Engineers

PROJECT THE WORLD TRADE CENTER | TITLE CONNECTION DETAIL 804 C | DATE 8-14-67

REVISIONS

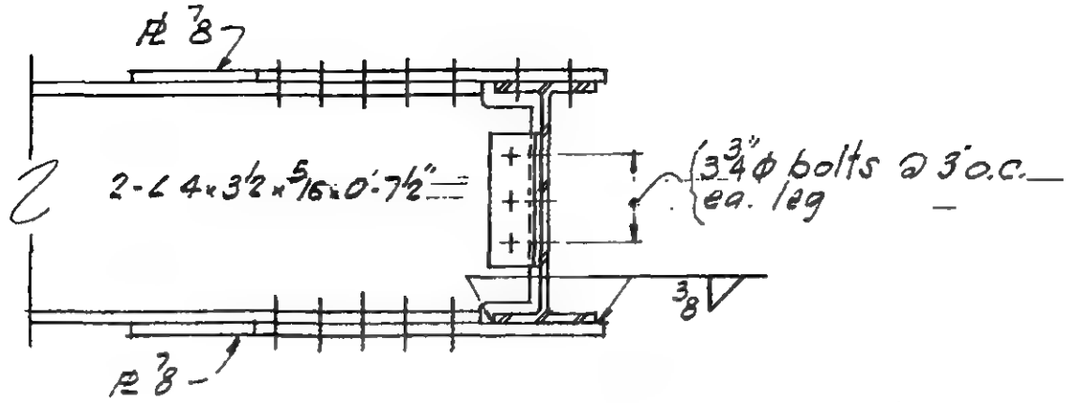

Section a-a

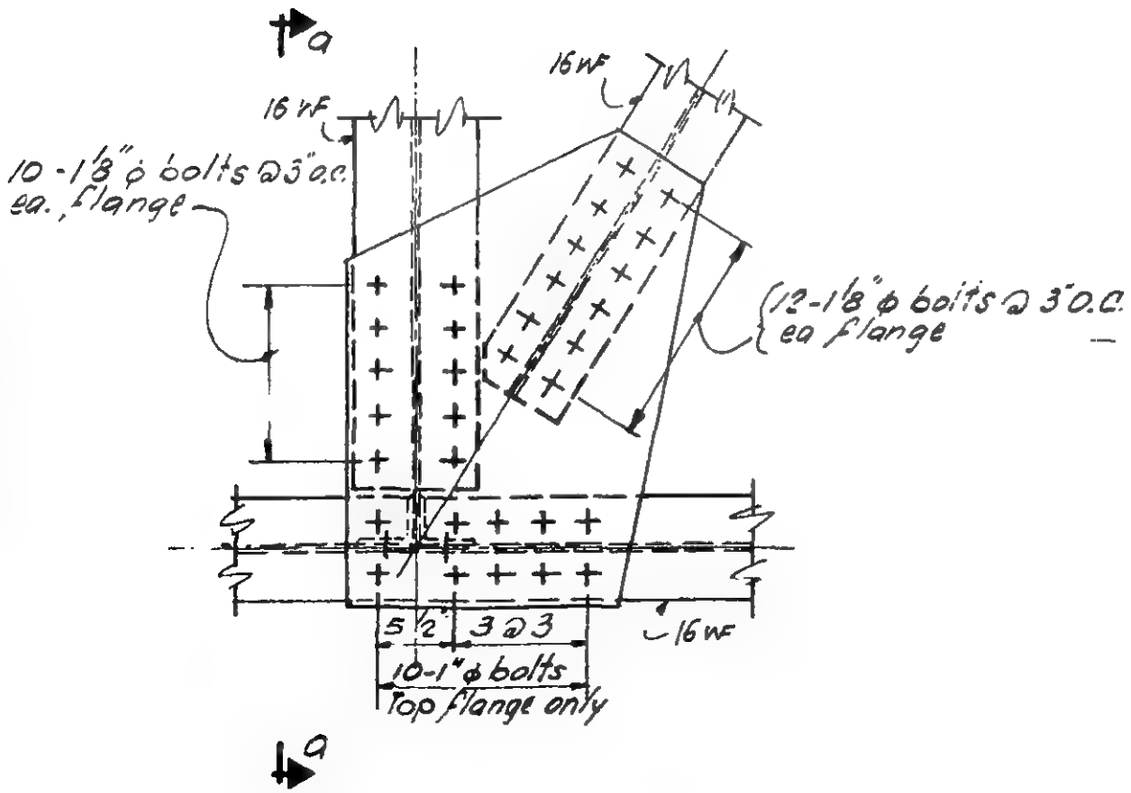

PLAN

LICENSED PROFESSIONAL ENGINEER
LESLIE E. ROBERTSON
No. 34360
UNIVERSITY OF THE STATE OF NEW YORK

5-AB1-310.2

SKILLING - HELLE - CHRISTIANSEN - ROBERTSON Structural & Civil Engineers

PROJECT THE WORLD TRADE CENTER | TITLE CONNECTION DETAIL 804D | DATE 8-14-67

REVISIONS

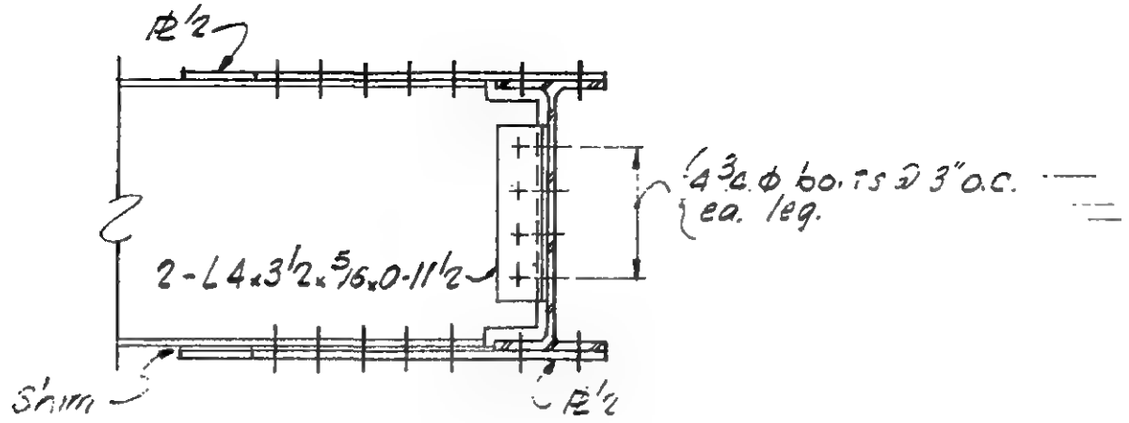

Section a-a

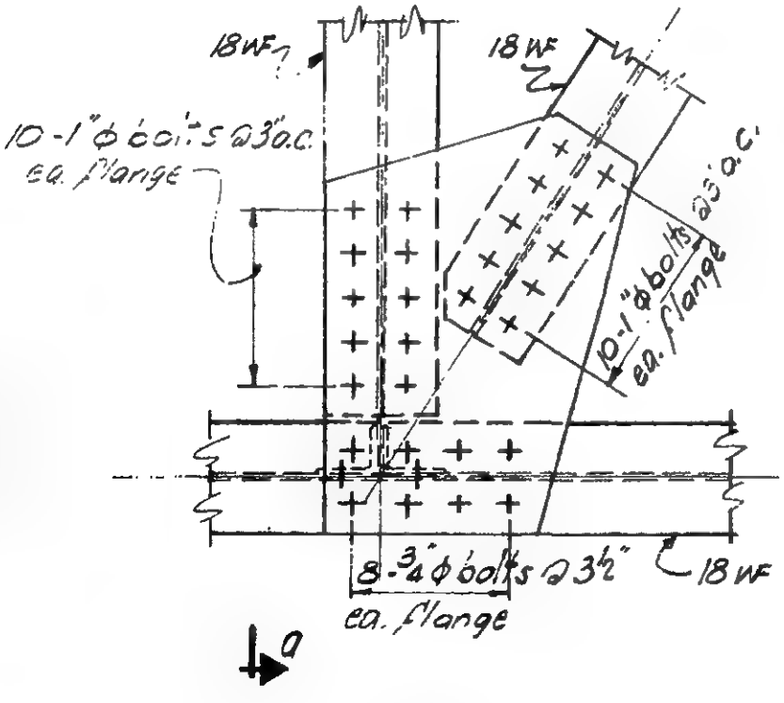

PLAN

LICENSED PROFESSIONAL ENGINEER
LESLIE E. ROBERTSON
No. 34360
UNIVERSITY OF THE STATE OF NEW YORK

6-AB1-310.3

WORTHINGTON, SKILLING, HELLE & JACKSON — Civil & Structural Engineers

PROJECT THE WORLD TRADE CENTER | TITLE CONNECTION DETAIL 805 A | DATE 6-19-67

REVISIONS

8.14.67

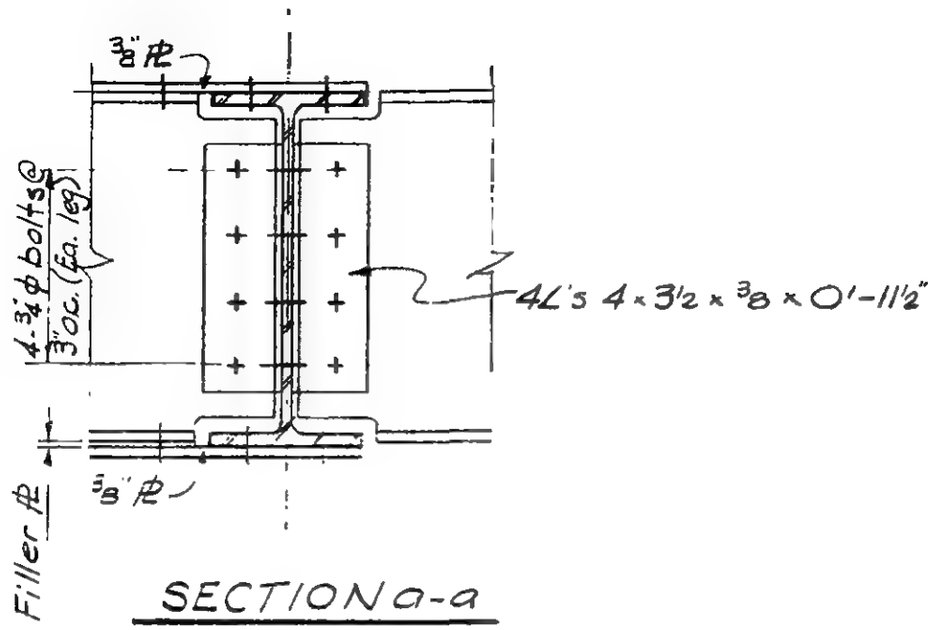

SECTION a-a

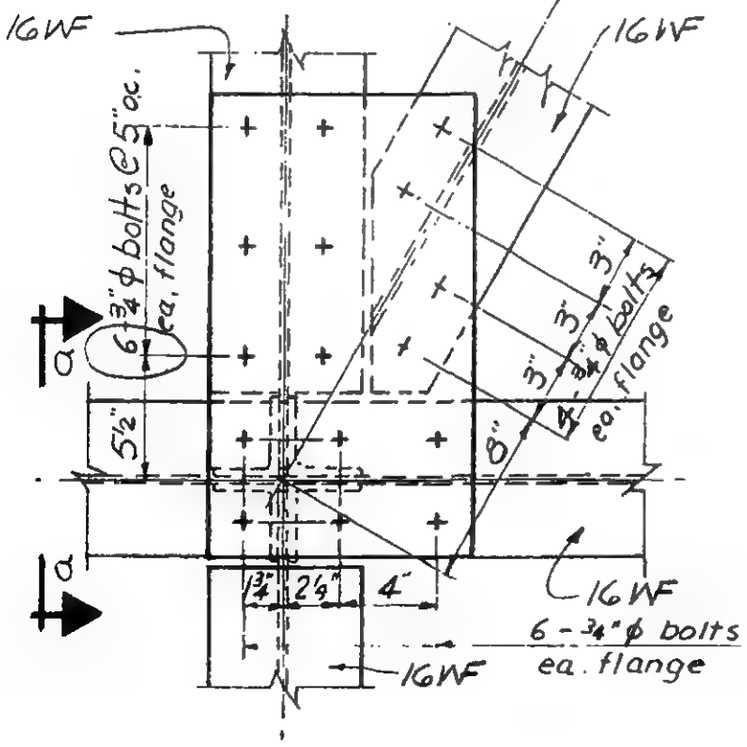

PLAN

LICENSED PROFESSIONAL ENGINEER — LESLIE E. ROBERTSON — No. 34360 — UNIVERSITY OF THE STATE OF NEW YORK

G-AB1-311

SKILLING - HELLE - CHRISTIANSEN - ROBERTSON Structural & Civil Engineers

PROJECT THE WORLD TRADE CENTER | TITLE CONNECTION DETAIL 805B | DATE 8-14-67

REVISIONS

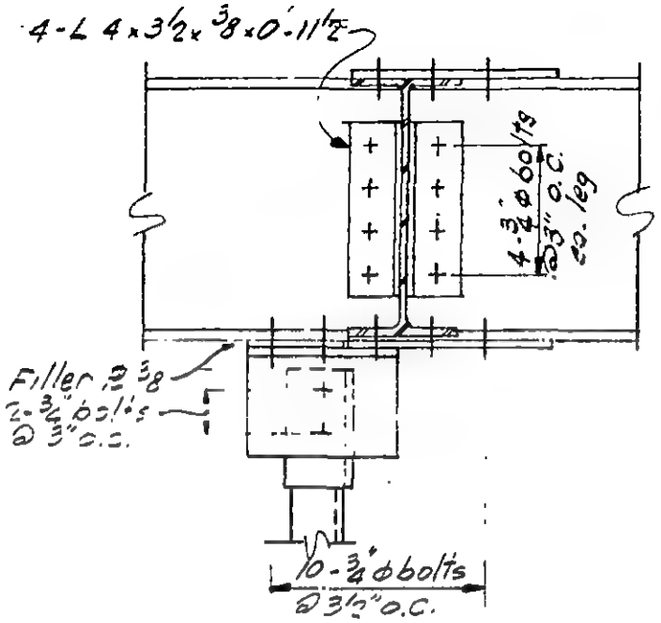

Section a-a

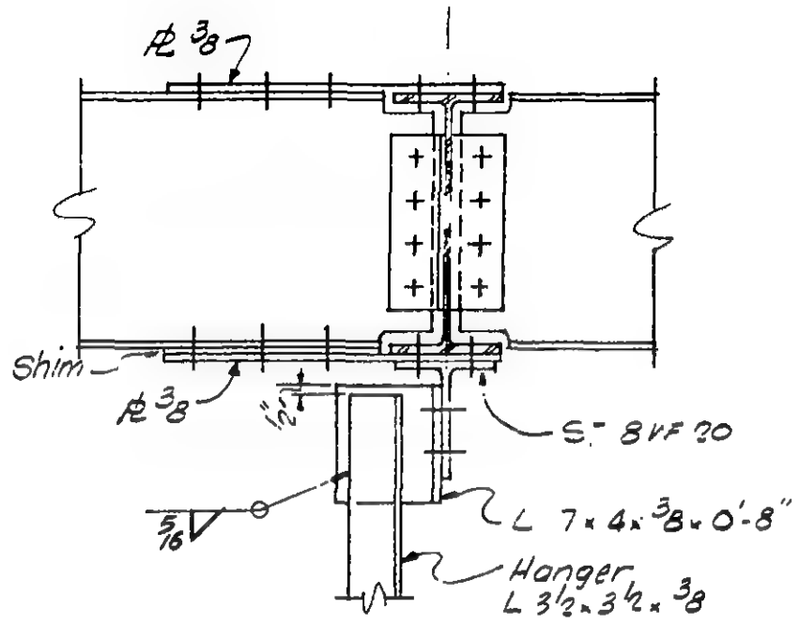

Section b-b

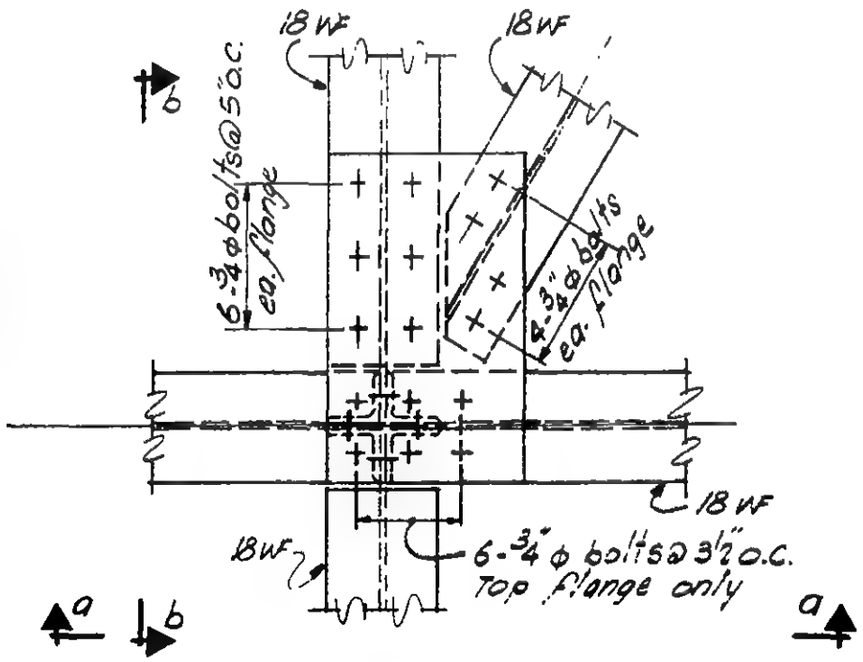

PLAN

LICENSED PROFESSIONAL ENGINEER
LESLIE E. ROBERTSON
No. 34360
UNIVERSITY OF THE STATE OF NEW YORK

6-AB1-311.1

WORTHINGTON, SKILLING, HELLE & JACKSON — Civil & Structural Engineers

PROJECT: THE WORLD TRADE CENTER | TITLE: CONNECTION DETAIL 806 A & C | DATE: 6-19-67

REVISIONS
8-14-67
9-29-67

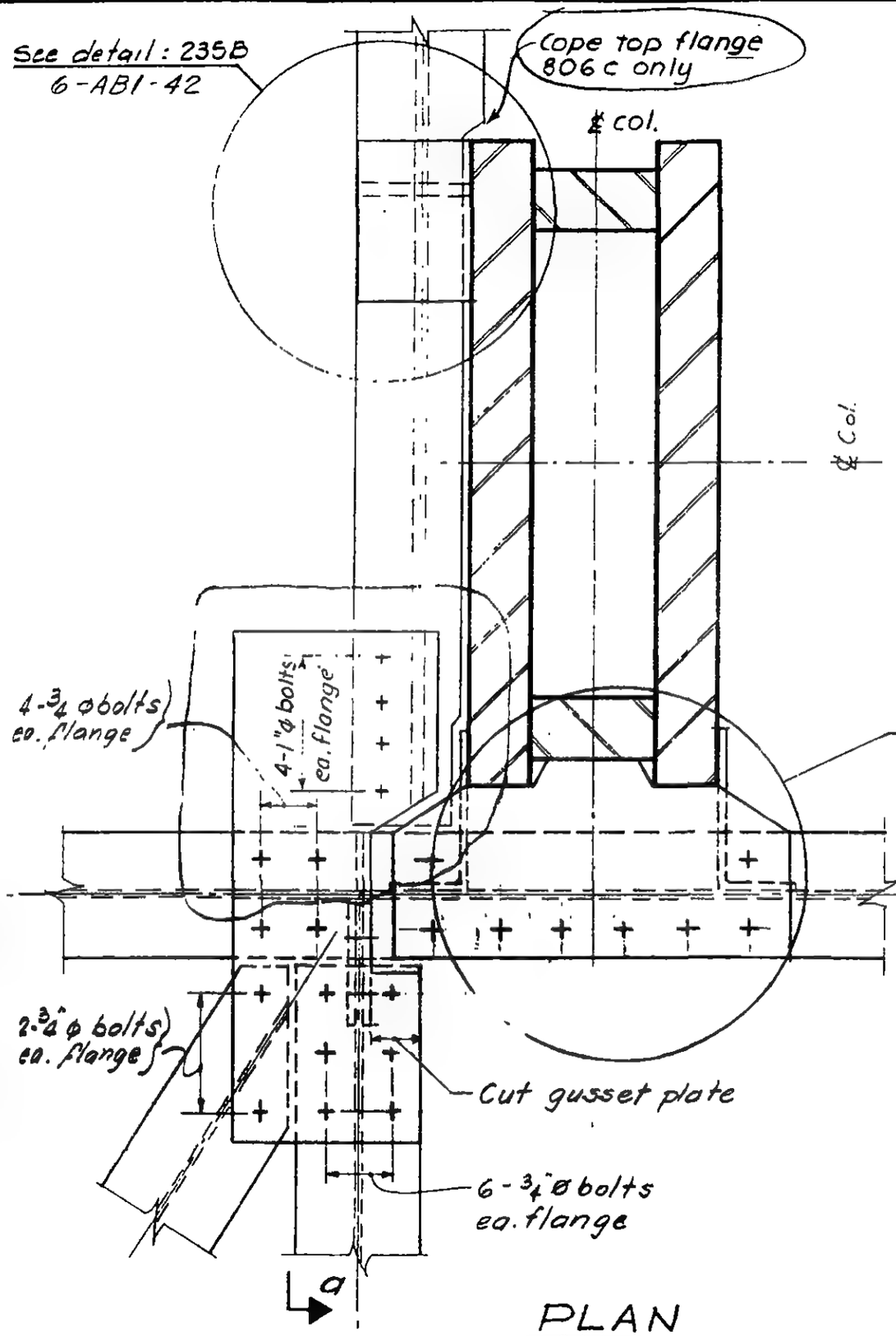

PLAN

Note:
Detail 806 A - All beams 16 WF
Detail 806 C - All beams 18 WF

See detail : 205 H, 6-AB1-9.4
812 A, 6-AB5-10
813 A, 6-AB5-11

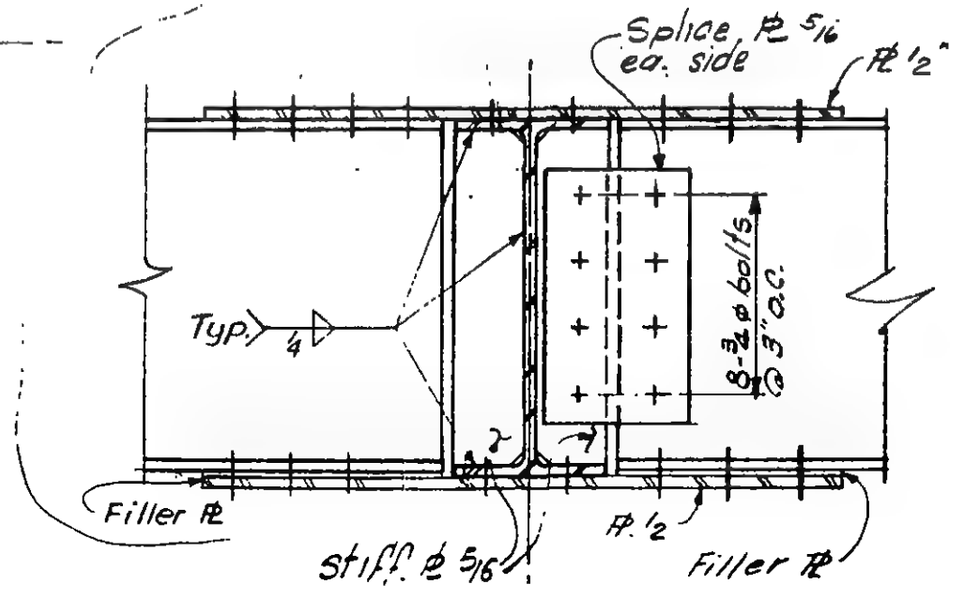

SECTION a-a

G-AB1-312

LICENSED PROFESSIONAL ENGINEER — LESLIE E. ROBERTSON — No. 34360 — UNIVERSITY OF THE STATE OF NEW YORK

SKILLING - HELLE - CHRISTIANSEN - ROBERTSON Structural & Civil Engineers

PROJECT THE WORLD TRADE CENTER | TITLE CONNECTION DETAIL 806 B | DATE 8.14.67

REVISIONS

9-29-67

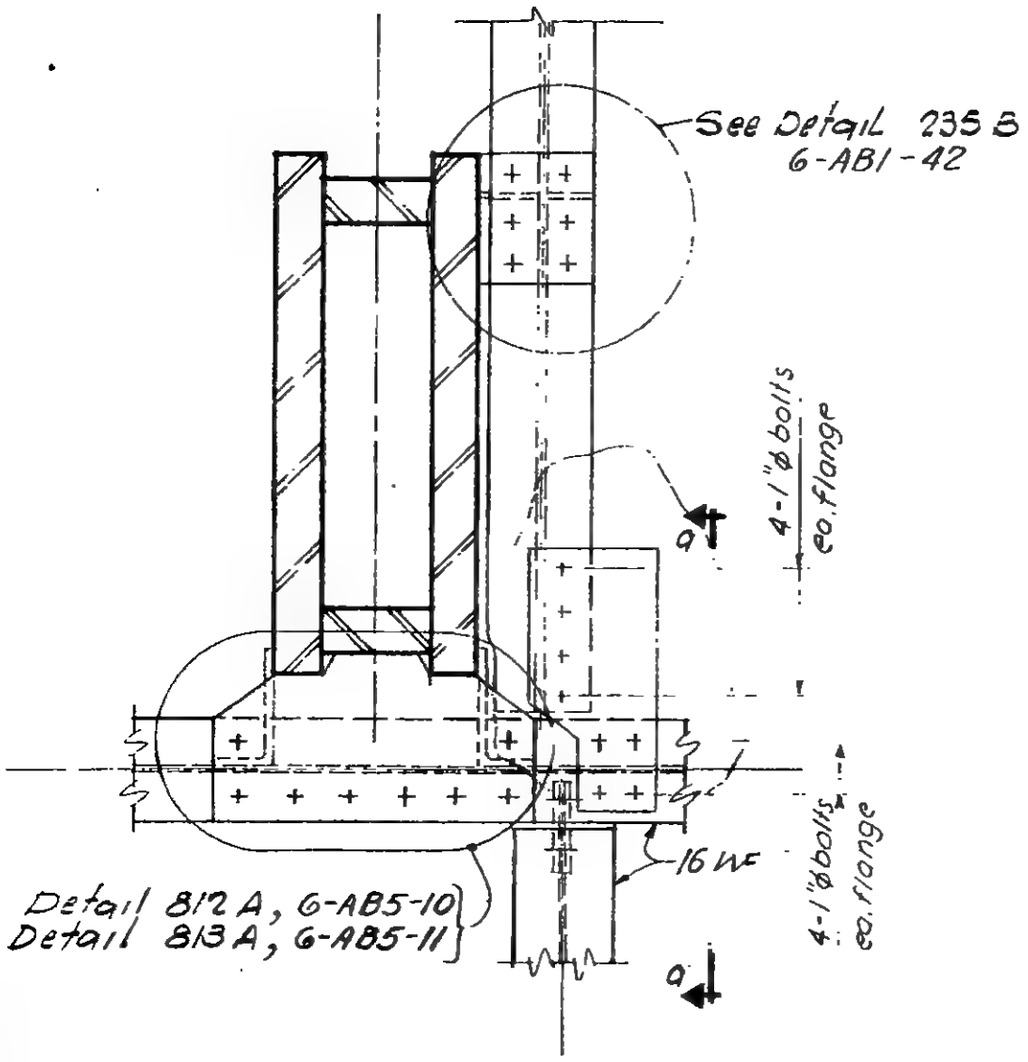

PLAN

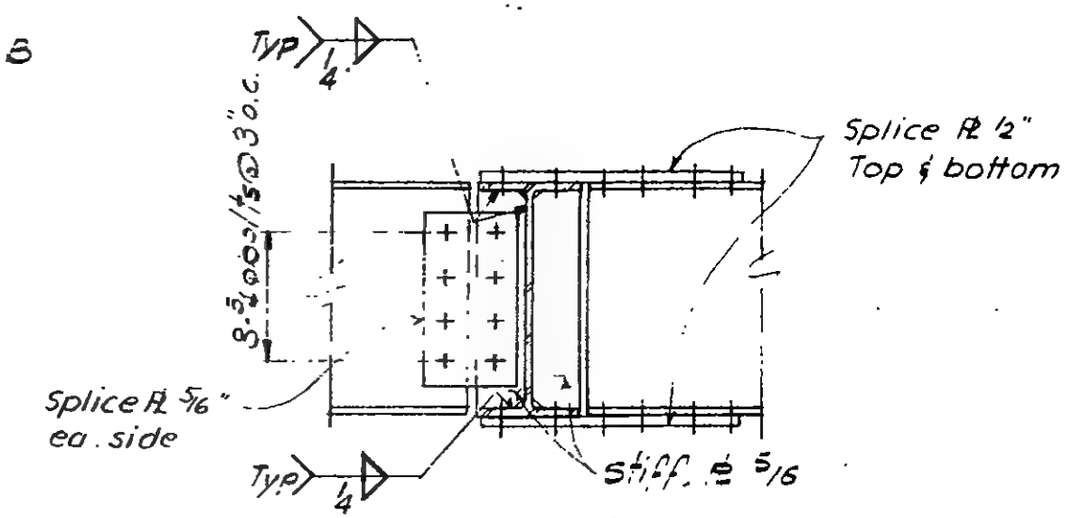

Section a-a

LICENSED PROFESSIONAL ENGINEER
LESLIE E. ROBERTSON
No. 34360
UNIVERSITY OF THE STATE OF NEW YORK

6-AB1-312.1

WORTHINGTON, SKILLING, HELLE & JACKSON — Civil & Structural Engineers

PROJECT: THE WORLD TRADE CENTER | TITLE: CONNECTION DETAIL: 807A & 807B | DATE: 6-19-67

REVISIONS

8-14-67

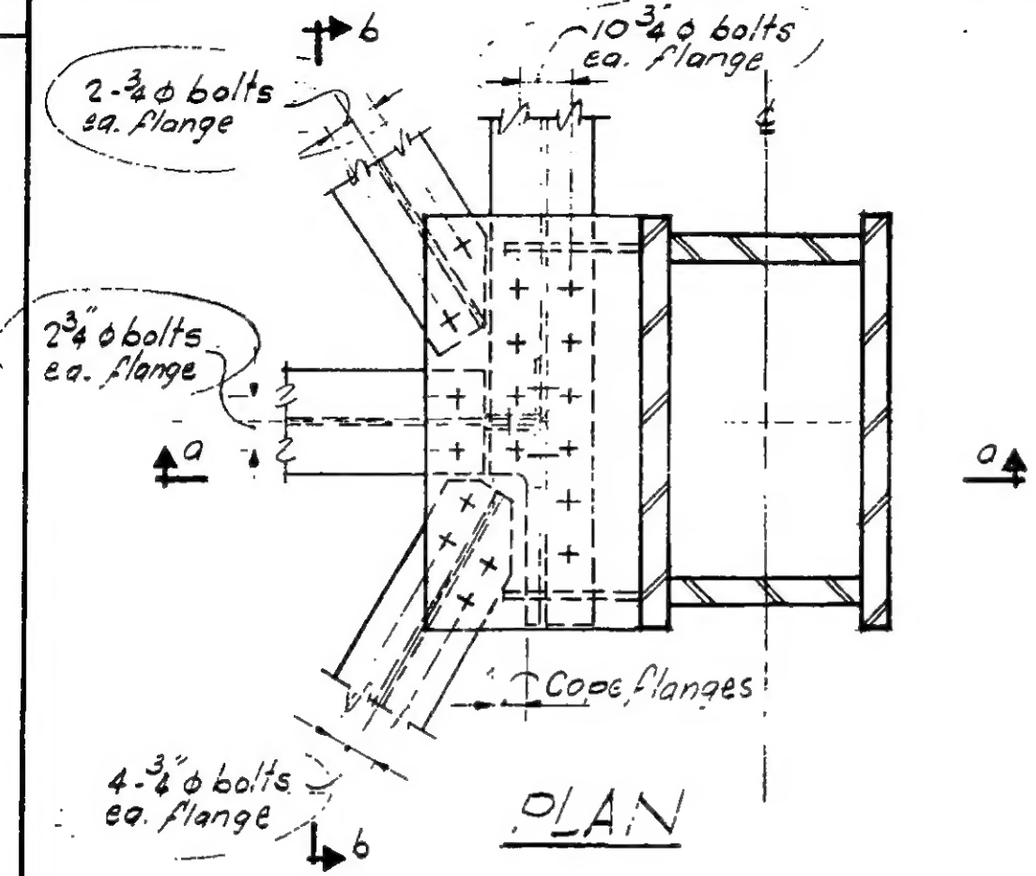

PLAN

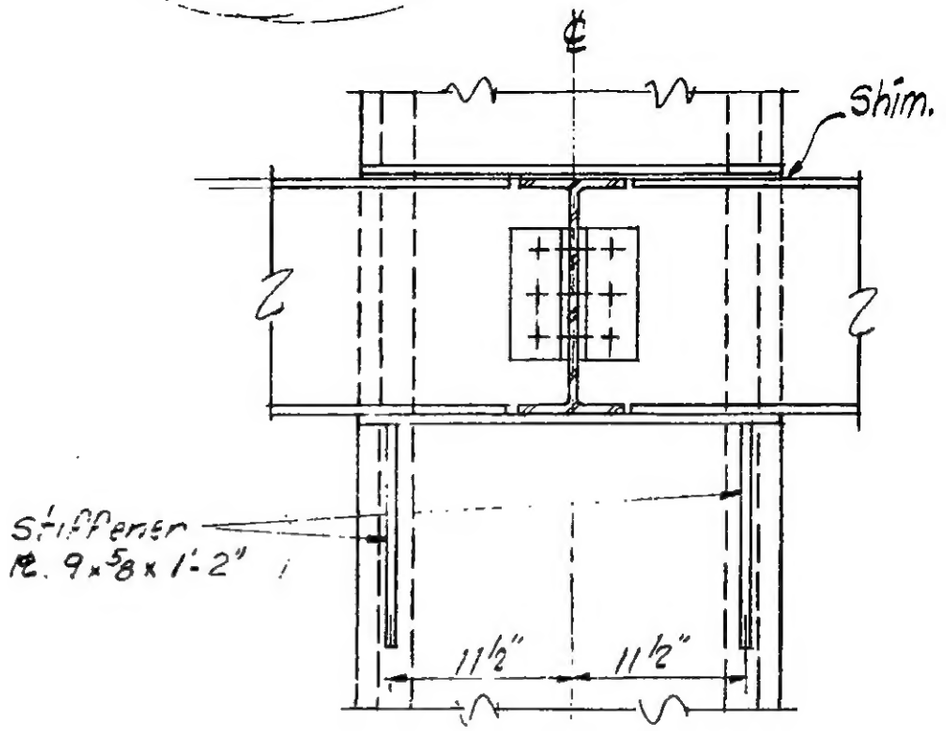

Section b-b

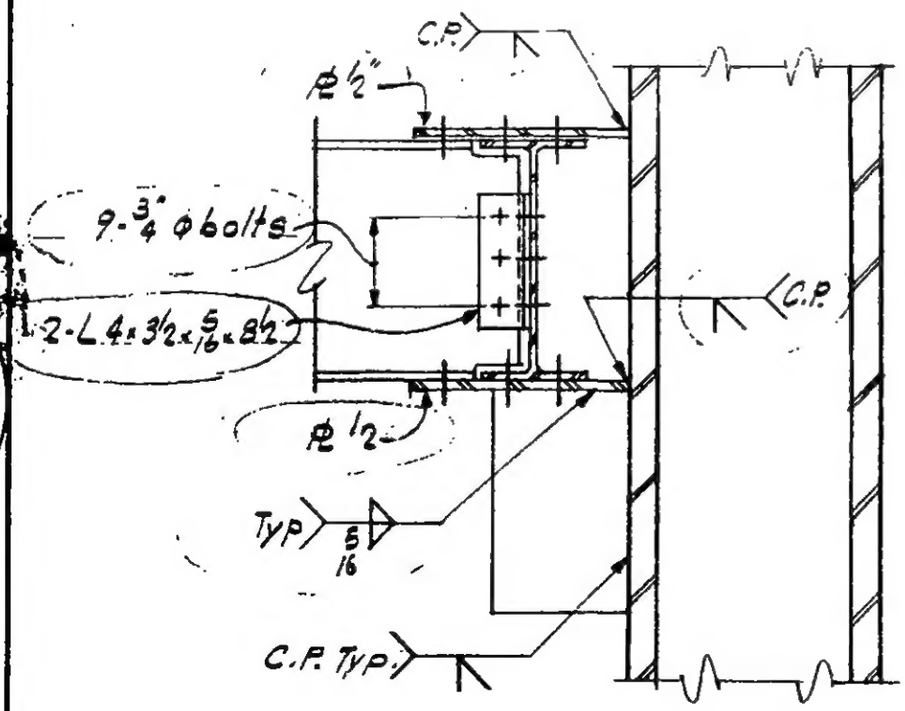

Section a-a

Note:
All beams 16 WF in Det. 807A
All beams 18 WF in Det. 807B

6-AB1-3/3

SKILLING, HELLE, CHRISTIANSEN, ROBERTSON — Structural & Civil Engineers

PROJECT THE WORLD TRADE CENTER | TITLE CONNECTION DETAIL 808 | DATE 1-10-69

REVISIONS

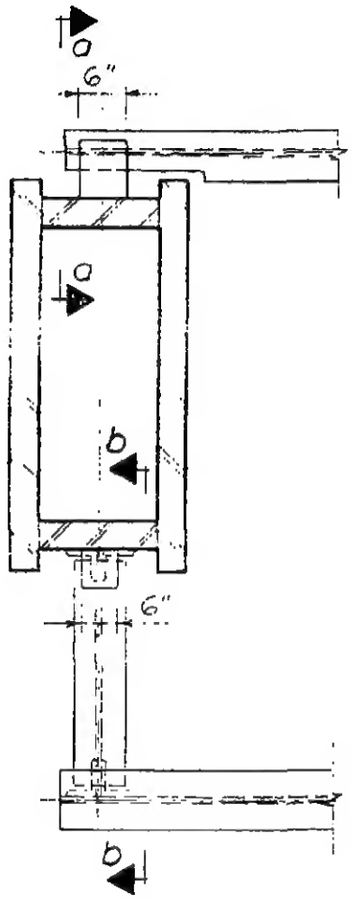

Plan

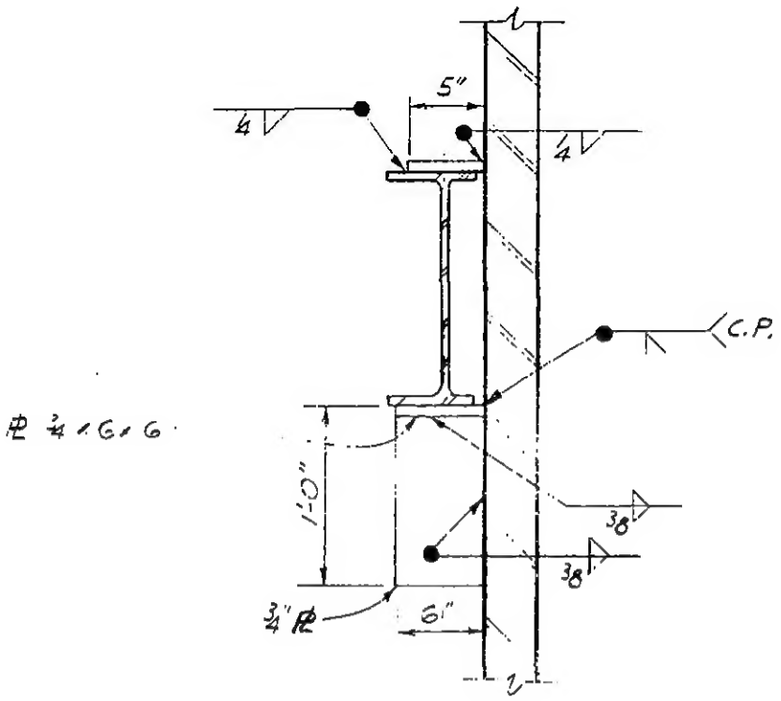

Section a-a

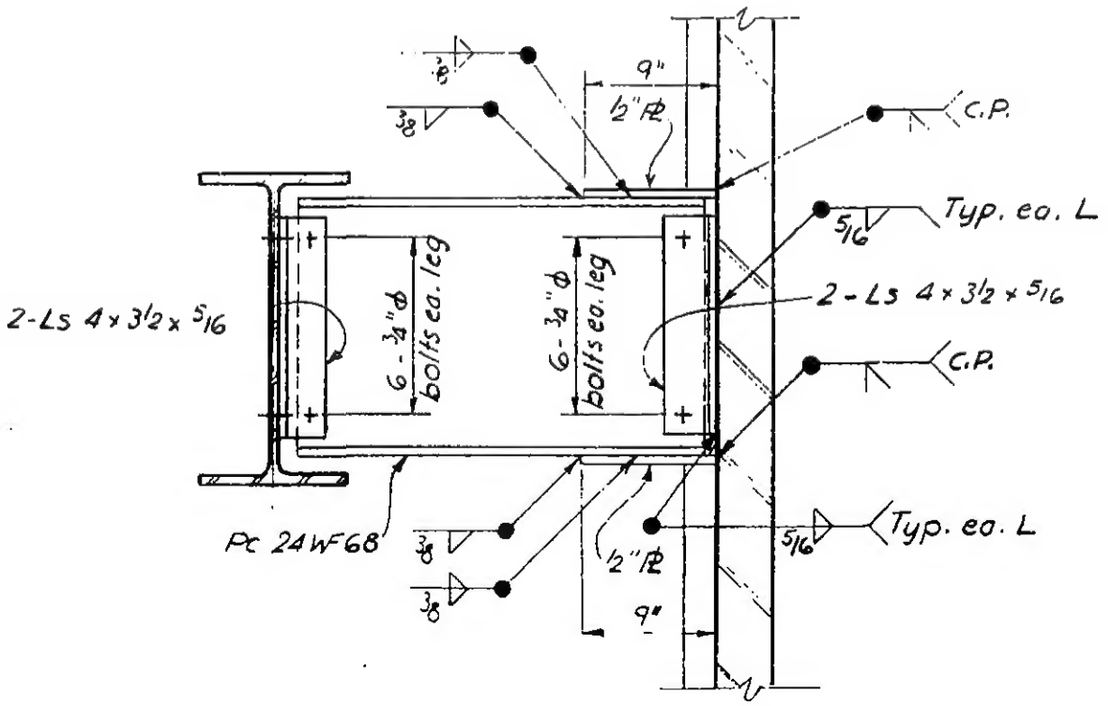

Section b-b

LICENSED PROFESSIONAL ENGINEER — LESLIE E. ROBERTSON — No. 34360 — UNIVERSITY OF THE STATE OF NEW YORK

DESIGNED

DRAWN

REVIEWED

6-AB1 - 3/4

SKILLING, HELLE, CHRISTIANSEN, ROBERTSON — Structural & Civil Engineers

PROJECT THE WORLD TRADE CENTER | TITLE CONNECTION DETAIL 809A, 809B | DATE 1-10-69

REVISIONS

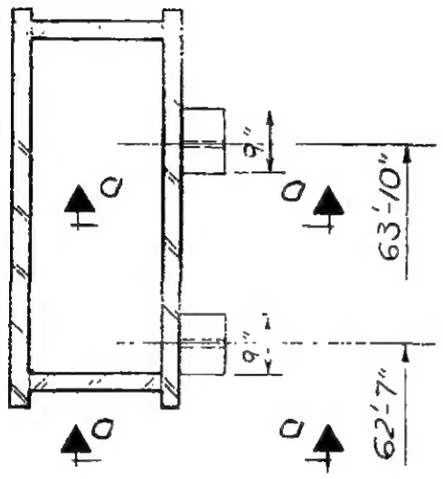

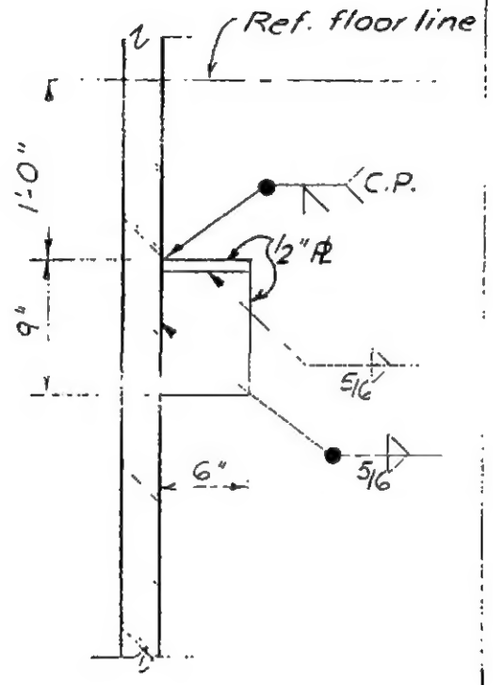

Section a-a

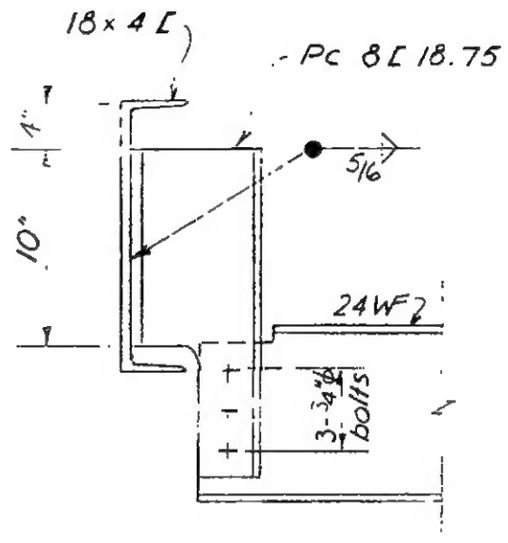

DETAIL 809 A

DETAIL 809 B

LICENSED PROFESSIONAL ENGINEER
LESLIE E. ROBERTSON
No. 34360
UNIVERSITY OF THE STATE OF NEW YORK

DESIGNED

DRAWN

REVIEWED

6-AB1-315

SKILLING - HELLE - CHRISTIANSEN - ROBERTSON Structural & Civil Engineers

PROJECT THE WORLD TRADE CENTER | TITLE CONNECTION DETAIL 3916 | DATE 12-8-67

REVISIONS

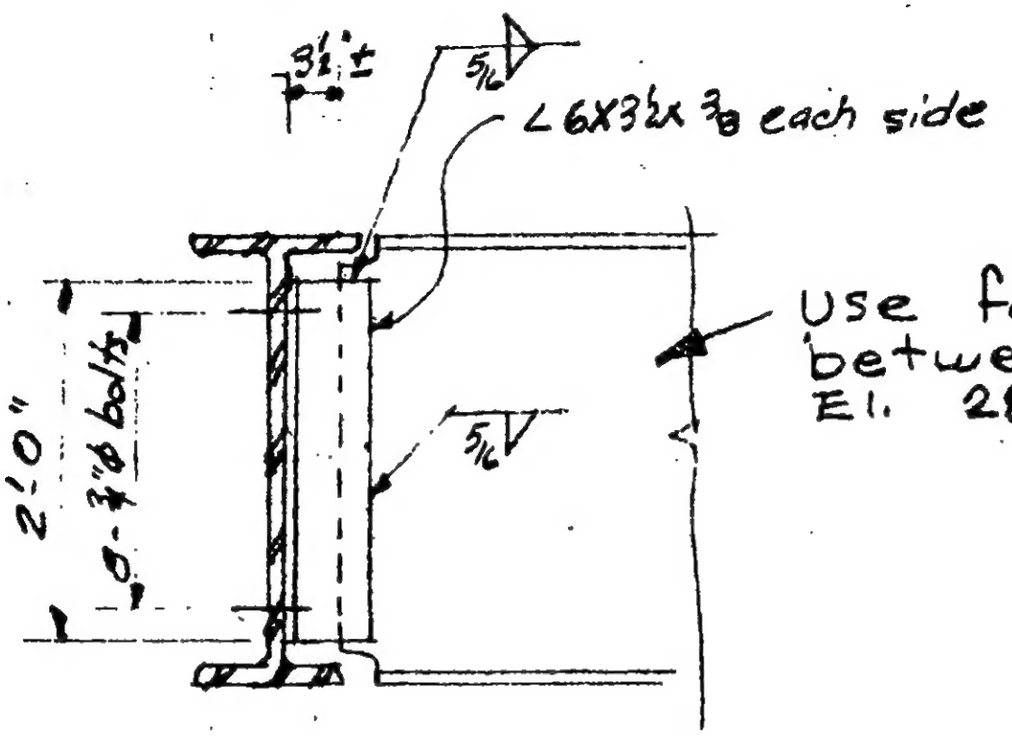

DETAIL X

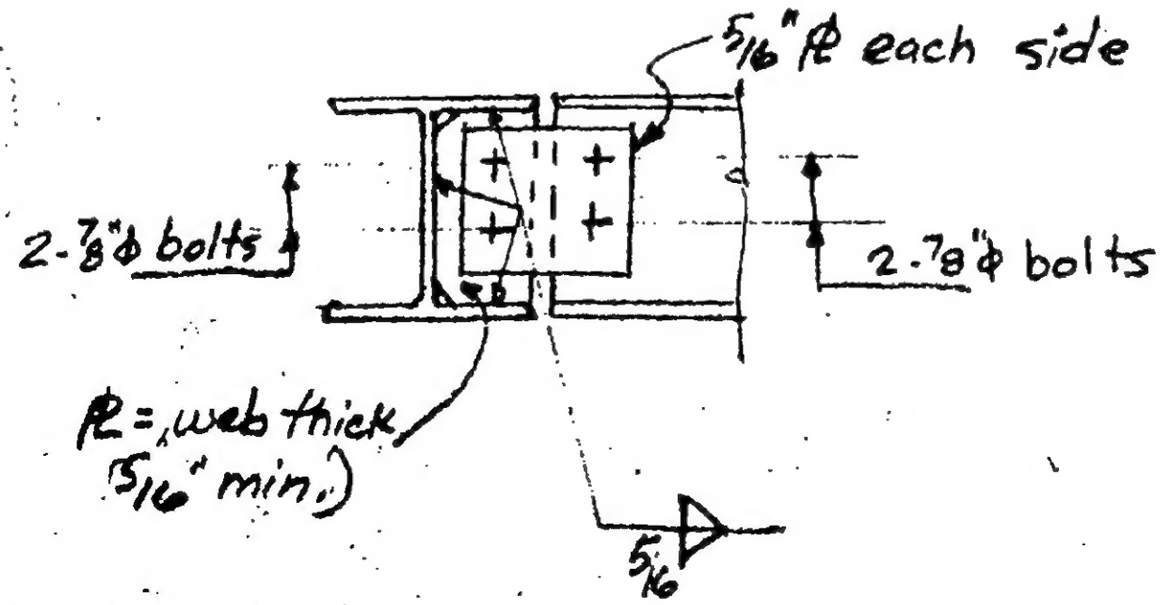

DETAIL Y

ALTERNATE
6-AB1-500